Commercial Kitchen Equipment Parts

ATOSA ACHP-4

Atosa ACHP-4 User Manual

Provided by PartHubz

parthubz.com

833-700-8006 | support@parthubz.com

In order to provide the best service, ATOSA Catering Equipment INC. requests that please register your warranty online at www.atosausa.com
For any service issues, please kindly contact us at
Email: warranty@atosausa.com
Or
Toll Free:+1-800-683-8660

Gas Countertop Hot Plates/Cooktops Operating Instructions

Before you begin, please read these instructions carefully to use this product correctly, to make the product perform ideally, and to avoid hazards.

Models: ACHP-2/ ACHP-4 / ACHP-6

Dear customers and users:

Thank you for purchasing our products. In order to be able to better use this product, please read these instructions carefully before any operation, and follow the guide, to avoid any unnecessary trouble during using.

Please keep this instruction manual in a safe place for convenient reference and operation.

This instruction manual is subject to any change without further notice, and the manufacturer reserves the right of final interpretation.

The appliance is designed for commercial purposes, not for household use.

DANGER

If you smell gas:

- **Shut off gas to the appliance.**
- **Extinguish any open flame.**
- **If odor continues, keep away from the appliance and immediately call your gas supplier or your fire department.**

FOR YOUR SAFETY

Do not store or use gasoline or other flammable vapors or liquids in the vicinity of this or any other appliance.

WARNING: Improper installation, adjustment, alteration, service or maintenance can cause property damage, injury or death. Read the installation, operating and maintenance instructions thoroughly before installing or servicing this equipment.

Gas Countertop Hot Plates/Cooktops
The Installation, Operation and Maintenance Guide

Contents

The table of contents is empty because you aren't using the paragraph styles set to appear in it.

1. Safety Protection

⚠ **Please make sure that the operator is an authorized and licensed technician before you allow him/her to install and operate the products. Be sure to strictly follow this instruction guide during installation and using. The manufacturer is not responsible for any dangers or accidents caused by improper operation or maintenance.**

⚠ **Do not store flammable or explosive objects around the product. Keep all flammable and explosive objects at a safe distance away from the product for normal use.**

⚠ **Place the product in a reasonable position. Regarding related matters of gas, customer should execute the requirements of local gas supply sector;**

⚠ **If you smell a gas leak, turn off the gas valves immediately and call the gas company;**

⚠ **The product should not be operated by those under 18 years of age, or those with physical or mental disorders, or disabilities that lack the necessary knowledge or experience unless with appropriate instructions and sufficient safety.**

2. Brief Instruction

The product is a series of gas hot plates in our company production, which is novel designed, reasonable structured, convenient operated, durable used, and convenient maintained. It's equipped with a cast-iron burner and a high efficiency stainless steel tubular burner and a pilot light, and convenient to ignite the main fire burner. This is hotel, supermarket, western restaurant, noshery and food industry's ideal cooking product equipment.

3. Manufacture’s Authority and Responsibility

Banning of all or partial transformation to the products without the manufacturer's explicit authorization.

Manufacturers refused to undertake responsibility to third parties as the following reasons:

⚠ **Not follow this instruction guidance and warning in in using and testing;**

⚠ **Not in accordance with the requirements of technical parameters using this product;**

⚠ **Incorrectly or irrationally using the product by untrained personnel;**

⚠ **Not obey the local law using this product;**

⚠ **Be repaired or changed by unauthorized technicians;**

⚠ **Use the spare parts or accessories provided by non-**

manufacturers;

⚠ **Accidents caused by force majeure;**

⚠ **Not strictly comply with related guide of this instruction by any reason.**

4. Parameter Specifications

4.1、Outline Dimensions(in)*

ACHP-2

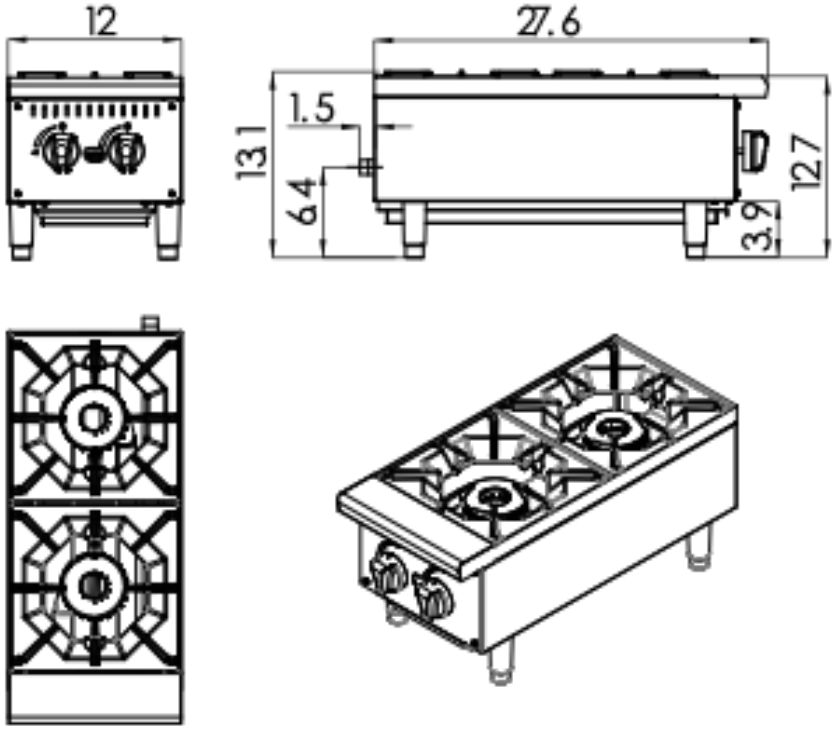

ACHP-4

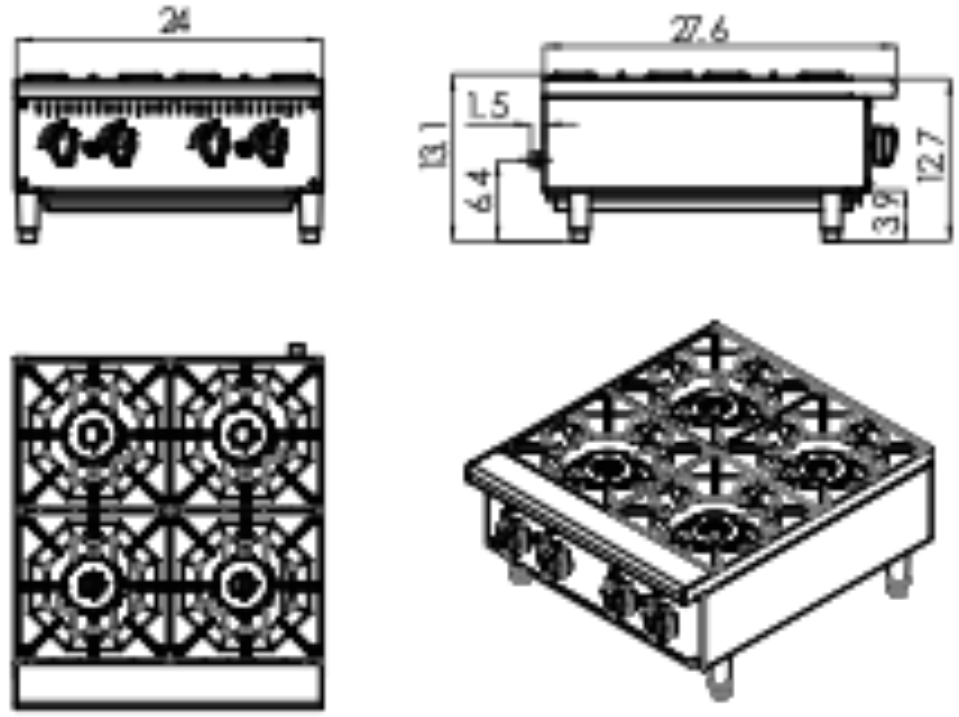

ACHP-6

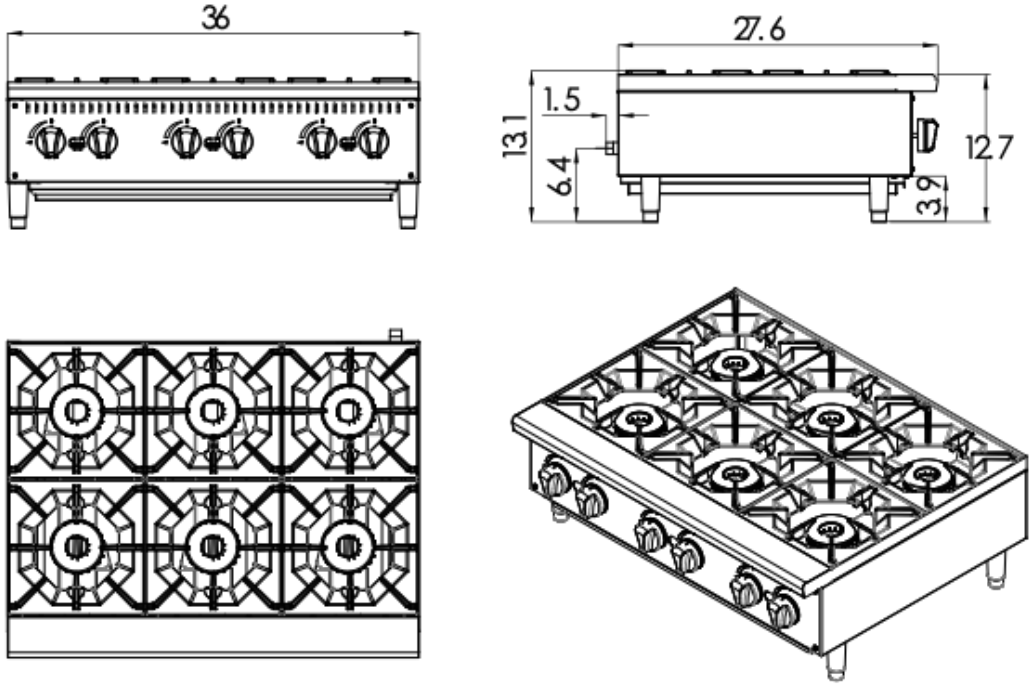

4.2、Information of Gas Supply and Burner

The minimum supplied gas pressure regulator is factory set at 4”Natural Gas W.C, and 10”L.P. Gas W.C. The external thread of product’s intake-tube is 3/4 inches.

<Table 1>

Model	#of burners and control method	Gas Species	Intake-tube pressure (in.W.C.)	Per BTU B.T.U./h	Total BTU B.T.U./h	Nozzle No.
ACHP-2	2 pieces Independent control	Natural Gas	4	32,000	64,000	NG37
		L.P. Gas	10	32,000	64,000	LPG51
ACHP-4	4 pieces Independent control	Natural Gas	4	32,000	128,000	NG37
		L.P. Gas	10	32,000	128,000	LPG51
ACHP-6	6 pieces Independent control	Natural Gas	4	32,000	192,000	NG37
		L.P. Gas	10	32,000	192,000	LPG51

5. Transport and Storage

In the process of transportation, handle carefully and keep upright to prevent damage of the product packing. Wrapped equipment should not be in open air for a long time, and shall be placed in a well-ventilated and non-corrosive gases warehouse. When equipment needs temporary storage, rainproof measures should be taken.

6. Installation and Debugging

⚠ **Any erroneous installation, adjustment, refit, overhaul or maintenance may cause property damage or personal injury. The work shall be performed by authorized and licensed technicians, otherwise the manufacturer has the right not to provide warranty service;**

⚠ **Only be installed in accordance with the local code. If no similar standard, you should conform to the National Fuel Gas Code, ANSI Z223.1/NFPA 54, the National Gas Installation Code, CSA-B149.1, or the L.P. Gas Installation Code, CSA-B149.2 as applicable;**

⚠ **The appliance individual shutoff valve must be disconnected from the gas supply piping system during any pressure testing of that system at test pressures in excess of 1/2psi (3.45kPa).**

6.1、Unpacking and Installation

⚠ Please dispose of all packaging materials and residues after unpacking;

⚠ Check the equipment. If it is damaged, please keep wrappers and receipts which must be signed by the carrier representative (Driver), and contact the carriers to pursue a claim within 15 days after receiving;

⚠ Be sure to install supporting legs before using, and do not tear up any label or logo before normal using;

⚠ Please read these instructions carefully before installation and operation. Please contact your local agent if you have any questions;

⚠ The equipment shall be installed on a level, solid, non-skid and incombustible surface, and placed in a well-lighted work area with waterproof, and away from children and customers;

⚠ The installation position is a well-ventilated place in accordance with the local regulations;

The charbroiled must be installed under the matched cooking fume exhauster according to the local regulations;

⚠ **Important: Installation and ventilation laws, and codes are very different, you should state and comply with all codes of the National Fire Protection Association Inc when it comes to requirements for installation of equipment;**

⚠ Screw 4 adjustable stainless steel legs in the tapping hole with four corners of the charbroiled bottom, ensure sufficient space for ventilation;

⚠ Adjustable stainless steel legs to make the equipment level, and get the same level with other series of the same stove; Please lift the equipment rather than drag if you need to move it;

⚠ Supplied gas pressure regulator is factory set at 4” Natural Gas W.C, and 10”L.P. Gas W.C;

⚠ The equipment can only be placed on the incombustible counter top, and keep a distance of at least 6 inches(152mm) to equipment’s both sides and back, and keep a distance of at least 4 inches(102mm) to the bottom;

⚠ Do not put anything around the equipment, and on the counter top and bottom, in order to avoid influencing combustion and air circulation;

⚠ Leave enough distance in front of the equipment to take apart the control panel. All major parts, in addition to the burner remove from the front intake-tube;

⚠ It may be necessary to adjust the balance of air input by authorized and licensed technicians;

⚠ Thread glue must be resistant to the action of liquefied petroleum gases.

⚠ **Warning! Use soap water or testing instrument to test whether piping joint leaks or not before using, and forbid using an open flame to test!**

⚠ After installing completely, you should check gas supply pressure. Use a pressure gauge which is equipped with liquid (such as U-type pressure gauge, the minimum value is 0.1mbar) or a digital pressure gauge to test. Steps are as following:

- Remove top panel, and needle type pressure joint screw arbor (Fig.1), then slip rubber tube of pressure gauge over needle type pressure joint;
- Start the equipment in accordance with the instructions, measuring gas supply pressure (dynamic pressure) in the work state;
- Access to the equipment if measured data within the limits of Table 1, otherwise, you will need to adjust gas pressure regulating valve or contact gas supplier to bargain;

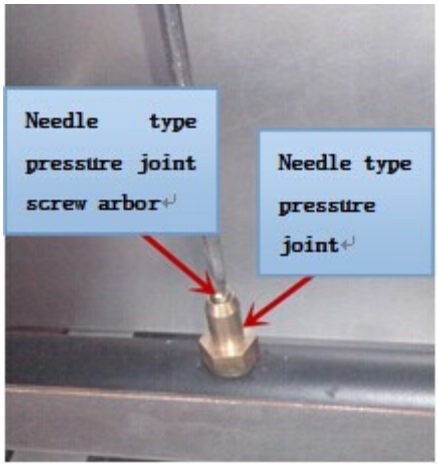

Fig.1

- Unplug pressure gauge after you accomplish pressure testing, then install needle type pressure joint screw arbor. **Important: must screw joint screw arbor, to prevent gas escape!**

6.2、Debugging

It's very important to debug the new stove. Through the comprehensive system test of equipment, we can ensure function and safety performance of products. Discovering any potential problems before use (such as equipment's placement, ventilation, operation, etc), can avoid costly losses.

7. Safety Notices and Precautions

⚠ **Warning! For your safety, do not place petrol and other flammables nearby. Please keep clean and free of flammables surroundings. (Read ANSI Z83.14B, 1991 for reference)**

⚠ **Warning! Any erroneous installation, adjustment and refit may cause property damage or personal injury and maintenance failure. Read the instructions carefully before installation and using.**

⚠ **Warning! Operation instruction must be placed in a conspicuous location. When customers smell gas in the process of using, should take safety precautions immediately. Immediately turn off the main gas valve, extinguish all heat and flames, and call 911. Safety information can be obtained from your local gas**

suppliers.

When using this equipment, safety precautions should always be followed, including the following:

⚠ The hot plates/cooktops burners, cooking grates and outside surfaces may become hot after use, so you must be careful to touch;

⚠ During operation, do not directly touch burners and cooking grates;

⚠ Turn off the equipment as repairing, maintaining and cleaning;

⚠ If the equipment has any problems of equipment damage, gas piping leaks, igniter or valves damage, or lose product accessories, do not operate, and call for the service immediately;

⚠ The use of attachments not recommended or sold by the manufacturer may cause fire, personal injury or even death;

⚠ Do not use out of doors;

⚠ The equipment is used for cook, not available for any other use;

⚠ The equipment does not contain any user-serviceable parts. Dealers or technicians will repair it. Do not take apart any spare parts without authorization;

⚠ Never change any other parts without authorization to this equipment, otherwise, may cause hazards, and the manufacturer has the right not to provide warranty service;

⚠ Steel cutting producers used to manufacture with sharp edges. The manufacturer has dealt with these sharp edges during production, however, we insist the operator take care when in contact with this piece of equipment;

⚠ Always keep hands, hair and clothing away from heating source.

⚠ Wait the unit cools down before cleaning. Because the unit is too hot to handle after using.

8. Operating Instructions

⚠ Before operating, make sure place the unit horizontally by adjusting bottom adjustable legs, and place the catch tray properly.

⚠ To ensure that the air flow in the bottom of the equipment .

⚠ Do not use a fan or air conditioning to the flame, so as to avoid the flame extinguished and a safety accident.

⚠ Must be installed the matched exhaust hood according to the local regulations above the equipment.

⚠ To ensure that the air in the kitchen is kept in circulation.

⚠ The pilot light has been set at the factory. Each burner has a pilot light.

8.1、Lighting the pilot light

Turn the control valve at the position of “0”(Fig.2), make sure all knobs are in the close state. Light and hold an ignition source at the pilots. The pilot light may not be lighted immediately, for existing gas in the pipe. Wait a minute, the pilot light will be lighted after the gas extinguished.

Tips: You can use a screwdriver to adjust the height of the flame (Fig.3).

8.2、Igniting the main burner

Revolve the main fire control valve knob anticlockwise after lighting the pilot light, then the main fire burner is lighted by the pilot light. The power of burner increases as revo ing angel increases. When knob reaches to " ", burn is in the maximum power (Fig.4).

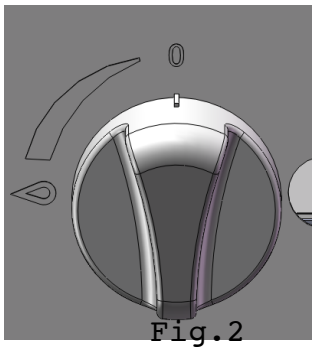

Fig.2

Fig.3

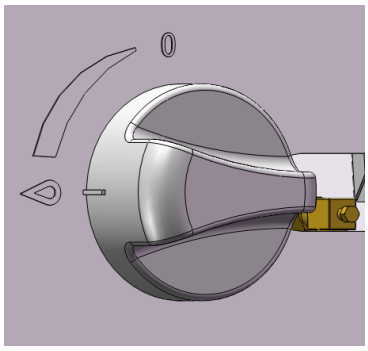

Fig.4

⚠ Make sure air circulation at the bottom of equipment;

⚠ Do not use fan or air-conditioning blowing at the flame, in order to avoid extinguishing flame and cause safety accidents;

⚠ Install the matched cooking fume exhauster according as the local regulations over the char broiler;

⚠ Make sure to keep the air natural circulation in the kitchen.

8.3、Turn off the valve

Revolve the control valve knob clockwise to "0" (Fig.1), so that extinguish flame of the main burner, but the pilot light still works.

After turn off the equipment, the main fire should be stop more than 5 minutes before next use.

8.4、Stove Operation

Before using the stove for the first time, please use a mild detergent to wipe it clean. Do not use corrosive or abrasives detergent.

Turn the burners on about 15-20 minutes before broiling for preheating, according to the cooking requirement to adjust the flame size.

Notice: When first preheating, the furnace will smoke above. This is caused by protective lipids on the grates and other parts are heated, it is normal, and it will be eliminated after the power up to the maximum for burning an hour.

8.5、Exchange main fire nozzle to switch gas source

Remove control panel, cooking grates, the pilot light head, and burner, remove main fire nozzle with proper open spanner, exchange nozzle of another gas source, nozzle no refer to TABLE 1, then screw it. Reinstall burner, the pilot light head, cooking grates and control panel in proper order.

⚠ **Caution: Each main fire orifice of the burner has been installed before delivery, normal use without adjustment but only switching gas. Adjust only by authorized and licensed technicians. When you converse the gas source, exchange the corresponding pressure maintaining valve which installed on air intake.**

8.6、Adjust air input

Remove control panel, unscrew damper solid screw(Fig.6), revolve damper left to right (Fig.7), meanwhile, observe flame, to adjust an appropriate opening degree. Then screw damper solid screw, make sure the equipment will not get loose in the process of moving and translation. Reinstall control panel.

⚠ **Caution: Each burner damper has been adjusted before delivery (once air input), normal use without adjustment but only switching gas. Adjust only by authorized and licensed technicians.**

Fig.5

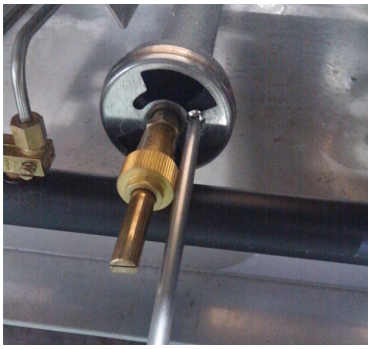

Fig.6

Fig.7

9. Cleaning and Maintenance

⚠ **Do not use any abrasive or flammable detergent to wipe;**

⚠ **Do not hose down, immerse or pressure wash any part of the cooker, excluding the catch tray;**

⚠ **Do not use abrasive cleaning matters to wash, even not use corrosive detergent!**

⚠ **Warning: Before cleaning, all control valves must be turned off. Strictly follow the lighting instructions to work again after cleaning!**

⚠ **Warning: Wait for the equipment to cool down after the unit has been turned off before you clean!**

⚠ **Cut off the gas source when not in use;**

⚠ **If the equipment is not used for a long time, clean the surface by wiping it with a soft cloth and place it in a well-ventilated area;**

⚠ **Comprehensively check the equipment at least once every year by authorized and licensed technicians;**

⚠ **The product is made of 90% metals, and can not be discarded everywhere. Deal with it in accordance with the local codes.**

⚠ **Instructions to clean appliance regularly with recommended cleaning agents, if necessary.**

⚠

Recommended cleaning methods

<Table 2>

Items	Methods	Times
Body	Wipe it with a soft cloth and mild detergent;	daily
Control panel	Turn off valves when not in use; Wipe panel and control valve knob with mild detergent.	daily
Catch tray	Pull out catch tray from front body until the equipment cools down. Use a cloth with cleaning agent to wipe unit surface, wipe up residue. Reinstall after cleaning. **Warning: if the catch tray is permitted to fill too high, should be cleaned!**	Per use

10. Troubleshooting

<Table 3>

Problems	**Possible causes**	**Problem solving**
Not lighting	1.Insufficient gas pressure in pipe	1.Contact the local gas supply dept.
	2.Nozzle occlusion	2.Dredge nozzle
Ignite the pilot light but not the main fire	1.Insufficient gas pressure in pipe	1.Contact the local gas supply dept.
	2.The main fire nozzle occlusion	2.Dredge nozzle
	3.Gas control valves have problems	3.Change gas control valves
	4.The pilot light and the main fire's distance is too far	4.Adjust the distance of them
	5.Flame is too low	5.Adjust the height of the pilot light
Close gas and heard a sound of fire	1.Insufficient gas pressure in pipe	1.Contact the local gas supply dept.
	2.Not match nozzle aperture with gas resources	2.Adjust nozzle diameter
	3.Flow of connection pipe is not enough	3.Increase pipe's allowable flow
	4.Damper opening degree is too large	4.Adjust damper
Yellow flame and black smoke	1.Use bottom gas	1.Change gas
	2.Not match nozzle aperture with gas resources	2.Adjust nozzle diameter
	3.Not enough air to ignite	3.Increase damper opening degree

	4.In the peak of using gas, sources of gas float heavy	4.Turn down valves flow. Turn it up after the peak

The problems mentioned above are only for reference. If any fault occurs, please stop using, and contact technicians to check and repair. Safety first, turn off the power and gas supply before maintenance.

Notice:

1. **Pressure maintaining valve connects with air intake, must be installed by authorized and licensed technicians, to ensure interface tightness.**
2. **Screw the hex nut (Fig.8) before connect air intake, ensure gas mark (Fig.9) on the plastic core whether match with connected gas source, if not, then pull out the plastic core and change another head, insert it again. The same as exchanging gas source.**
3. **When exchange gas source, use the A18 orifice (Fig.10) in the accessories. Follow rules of 8.5.**

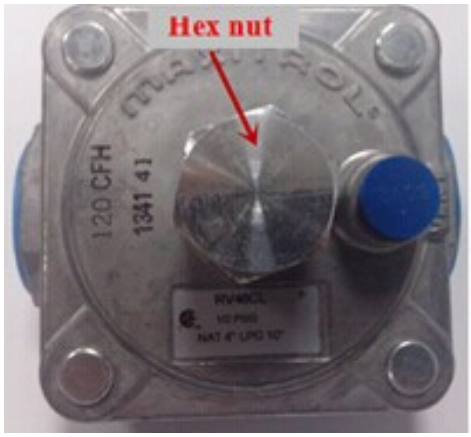

Fig.8 Fig.9

Fig.10

Conforms to ANSI STD Z83.11-2016
Certified to CSA STD 1.8-2016
Conforms to NSF/ANSI STD.4

Intertek Intertek
4003935

Our products have the advantages of good durability and low maintenance charge. But to update some components and necessary maintenance, can prolong life length of the products. Contact the dealer for assistance.

Commercial Kitchen Equipment Parts

Find more Atosa equipment resources at

parthubz.com/equipment/atosa

Need parts or service?

Call 833-700-8006

support@parthubz.com

parthubz.com