Commercial Kitchen Equipment Parts

ATOSA AEC-0511E

Atosa AEC-0511E Specification Sheet

Provided by PartHubz

parthubz.com

833-700-8006 | support@parthubz.com

Atosa Smart Touch Combi Ovens

STANDARD FEATURES

- 10” Smart Touch Flat Screen - Large colorful and vibrant icons
- Combi Smart Cooking - Automated monitoring to maintain cooking temperature and humidity
- Combi Smart Touch - Programable multi-stage cooking and menu options
- 8 Fan Speeds with balance reverse
- Humidity Control – Automatically maximizes steam saturation and humidity control
- Sub-divided Heating System for maximum recovery
- Smart Touch Rack Timing for batch cooking and a la carte service
- USB Storage – Save and share recipes and unit data with multiple units and locations
- Wi-Fi Connection - Remotely monitor Combi operation in real time via tablet or smart phone *
- Wi-Fi Self Diagnostics – Protect and ensure oven remains in safe working order *
- Wi-Fi Service Diagnostics - Remote service tech diagnostics and trouble shooting *
- 6 Mode Automated Combi Wash – Automatic cleaning based on soil and usage
- ATOSA Chemicals – Approved for use with ATOSA’s proprietary liquid Combi cleaner and rinse agent
- Twin Chemical Fill Tanks – Combi automatically reminds user to add cleaner / rinse to tanks when low
- Sleek Design - Triple pane tempered glass doors, condensed footprint, convenient for cleaning and maintenance
- Footless Combi Design - Ergonomic footing for stability and placement
- High-Pressure Coil Wash Hose - Ideal for manual quick flush, rinsing and cabinet quick cleaning

* Wi-Fi features not yet available - coming soon!

Toll Free: 855-855-0399 Email: info@atosausa.com
www.atosa.com | www.atosausa.com
California, Colorado, Florida, Georgia, Illinois, New Jersey, Ohio, Texas, Washington

MODELS

AEC-0511E / AEC-0621E / AEC-0711E / AEC-1011E / AEC-1021E

AEC-0511E

AEC-1011E

AEC-0621E

AEC-1021E

AEC-0711E

1 YEAR PARTS AND LABOR WARRANTY

Atosa is continuously improving products. Specifications are subject to change

REV. 12/24

Atosa Smart Touch Combi Ovens

SPECIFICATIONS

MODELS	AEC-0511E	AEC-0711E	AEC-1011E	AEC-0621E	AEC-1021E
Capacity	5 x (18” x 13”) Pan or 5 x (12” x 20”) Pan	7 x (18” x 13”) Pan or 7 x (12” x 20”) Pan	10 x (18” x 13”) Pan or 10 x (12” x 20”) Pan	6 x (18” x 26”) Pan or 12 x (12” x 20”) Pan	10 x (18” x 26”) Pan or 20 x (12” x 20”) Pan
Rack Slots	5	7	10	6	10
Volts	208/240	208/240	208/240	208/240	208/240
Phase	3	3	3	3	3
Amp Draw (Min/Max)	21/28	33/42	43/55	41/54	63/80
Breaker	30A	40A	60A	60A	90A
KW	7.5 - 9.9	11.9-15	15.4-19.5	14.6-19.3	22.5-28.8
Connection / AWG	L1, L2, L3, G / 6-4	L1, L2, L3, G / 6-4	L1, L2, L3, G / 4-3	L1, L2, L3, G / 4-3	L1, L2, L3, G / 2-1
Dimension (WxDxH)	31” x 34 1/2” x 28”	31” x 34 1/2” x 35”	31” x 34 1/2” x 41 1/2”	36” x 42 1/2” x 36 1/2”	36” x 42 1/2” x 48 1/2”
Weight (lb)	209	267	300	354	436
Weight Capacity	Total = 198 lb 39 lb Per Shelf	Total = 273 lb 39 lb per Shelf	Total = 390 lb 39 lb per Shelf	Total = 390 lb 65 lb Per Shelf	Total = 650 lb 65 lb Per Shelf
Water/Drain Line Size	5/16” OD / 1” ID	5/16” OD / 1” ID	5/16” OD / 1” ID	5/16” OD / 1” ID	5/16” OD / 1” ID
Energy Star Rating	ENERGY STAR	ENERGY STAR	ENERGY STAR	ENERGY STAR	ENERGY STAR

PLAN VIEW

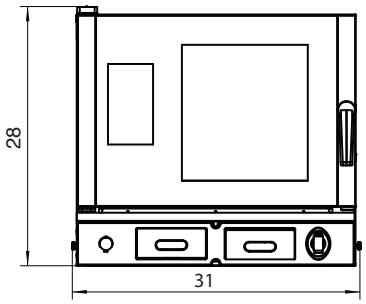

AEC-0511E

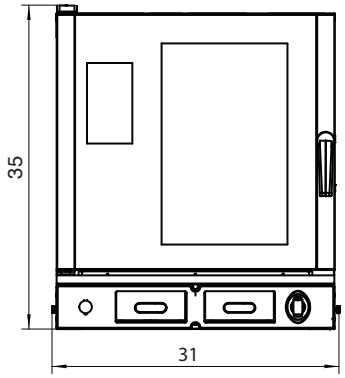

AEC-0711E

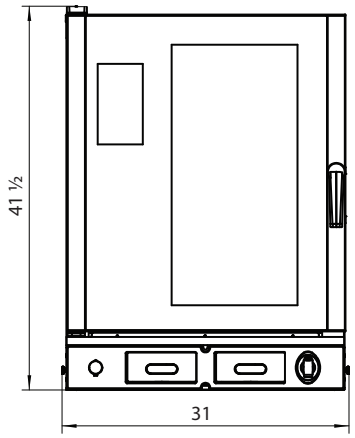

AEC-1011E

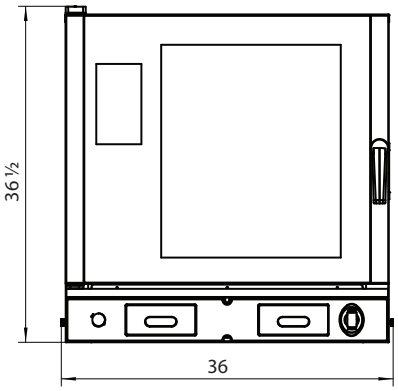

AEC-0621E

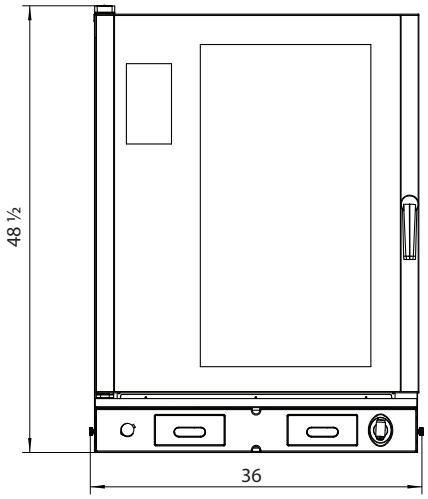

AEC-1021E

Atosa is continuously improving products. Specifications are subject to change

REV. 12/24

Commercial Kitchen Equipment Parts

Find more Atosa equipment resources at

parthubz.com/equipment/atosa

Need parts or service?

Call 833-700-8006

support@parthubz.com

parthubz.com