Commercial Kitchen Equipment Parts

ATOSA AGR-2B24GL

Atosa AGR-2B24GL Specification Sheet

Provided by PartHubz

parthubz.com

833-700-8006 | support@parthubz.com

ATOSA USA, INC.
Toll Free: 855-855-0399 Email: info@atosausa.com
www.atosa.com | www.atosausa.com
California, Colorado, Florida, Georgia, Illinois,
New Jersey, Ohio, Texas, Washington

"WE MAKE THE KITCHEN BETTER!"

MODELS:
AGR-2B24GR/AGR-2B24GL

36" Combination Gas Ranges

Standard Features

- Stainless steel exterior including front, back sides, kick plate, back guard and over shelf
- 36" combination ranges with either a 24" griddle top with 2 burners
- Heavy duty 3/4" thick polished steel griddle plate
- Drip tray provided under burners to catch grease drippings
- 32,000 BTU top burners, 27,000 BTU griddle & 27,000 BTU oven burners
- Oven temperature range between 175°F to 550°F
- Standing pilot for open top burners
- Oven pilot with 100% safety shut off
- Enamel interior oven for easy cleaning
- Multiple position oven rack guides
- Two(2) chrome oven racks per oven standard
- Available in Natural and Propane
- 3/4" NPT rear gas connection and regulator provided
- Four(4) casters standard

Optional Accessories

- Leg kit part #: 301110006
- Extra oven rack part #: 301100012

AGR-2B24GR

AGR-2B24GL

1 YEAR PARTS AND LABOR WARRANTY

Intertek 4003935 Intertek 4003935

Conforms to ANSI STD Z83.11b-2009 (2011)
Certified to CSA STD 1.8b-2009 (2011)
Conforms to NSF/ANSI STD.4

REV. 05/23

ATOSA USA, INC.
Toll Free: 855-855-0399 Email: info@atosausa.com
www.atosa.com | www.atosausa.com
California, Colorado, Florida, Georgia, Illinois,
New Jersey, Ohio, Texas, Washington

"WE MAKE THE KITCHEN BETTER!"

SPECIFICATIONS

Models	Gas Type	Burner Name	BTU's	Number of Burners	Valve Types	Oven Size (inch)	Hot Plates Working Area(inch)	Griddle Working Area(inch)	Exterior Dimensions (inch)	Net Weight (lbs)	Gross Weight (lbs)
AGR-2B24GR	NG	Hot plates	64,000	2	Pilot light	$26^{1/2}\times26\times14$	2pcs $11^{4/5}\times11^{4/5}$	$24\times50^{5/8}$	$36\times31\times57^{3/8}$	479	607
		Griddle	48,000	2							
		Oven	24,000	1							
	LP	Hot plates	46,000	2							
		Griddle	48,000	2							
		Oven	27,000	1							
AGR-2B24GL	NG	Hot plates	64,000	2	Pilot light	$26^{1/2}\times26\times14$	2pcs $11^{4/5}\times11^{4/5}$	$24\times50^{5/8}$	$36\times31\times57^{3/8}$	479	607
		Griddle	48,000	2							
		Oven	24,000	1							
	LP	Hot plates	46,000	2							
		Griddle	48,000	2							
		Oven	27,000	1							

PLAN VIEW

AGR-2B24GR

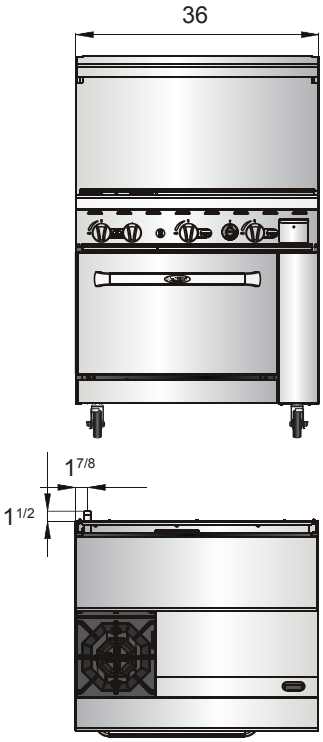

AGR-2B24GL

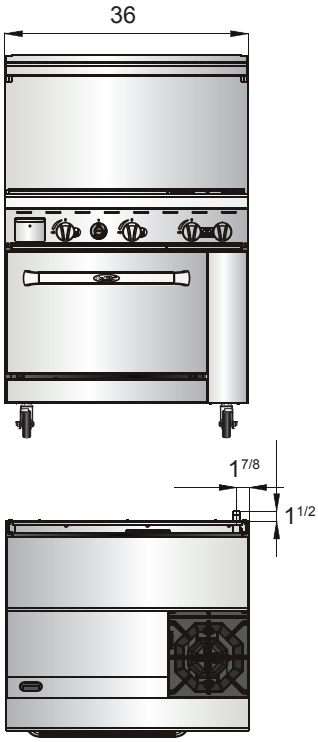

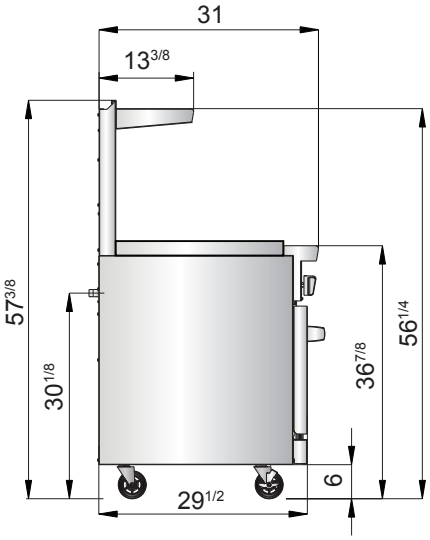

Heavy duty burners

Chrome oven rack

Stainless steel knobs

Stainless steel drawers

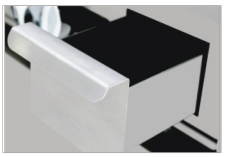

Logo

Atosa is continuously improving products. Specifications are subject to change without notice.

Commercial Kitchen Equipment Parts

Find more Atosa equipment resources at

parthubz.com/equipment/atosa

Need parts or service?

Call 833-700-8006

support@parthubz.com

parthubz.com