Commercial Kitchen Equipment Parts

ATOSA AGR-6B24GR

Atosa AGR-6B24GR document

Provided by PartHubz

parthubz.com

833-700-8006 | support@parthubz.com

Appendix 2. Explosive view of product and parts

AGR-6B-24R(NG/LG)/AGR-6B-24L(NG/LG)

The use of parts provided by other companies, our company has the right not to provide warranty service;
Order replacement parts from authorized representatives and after-sale service agency.
Provide the model number, serial number and description when you order components.

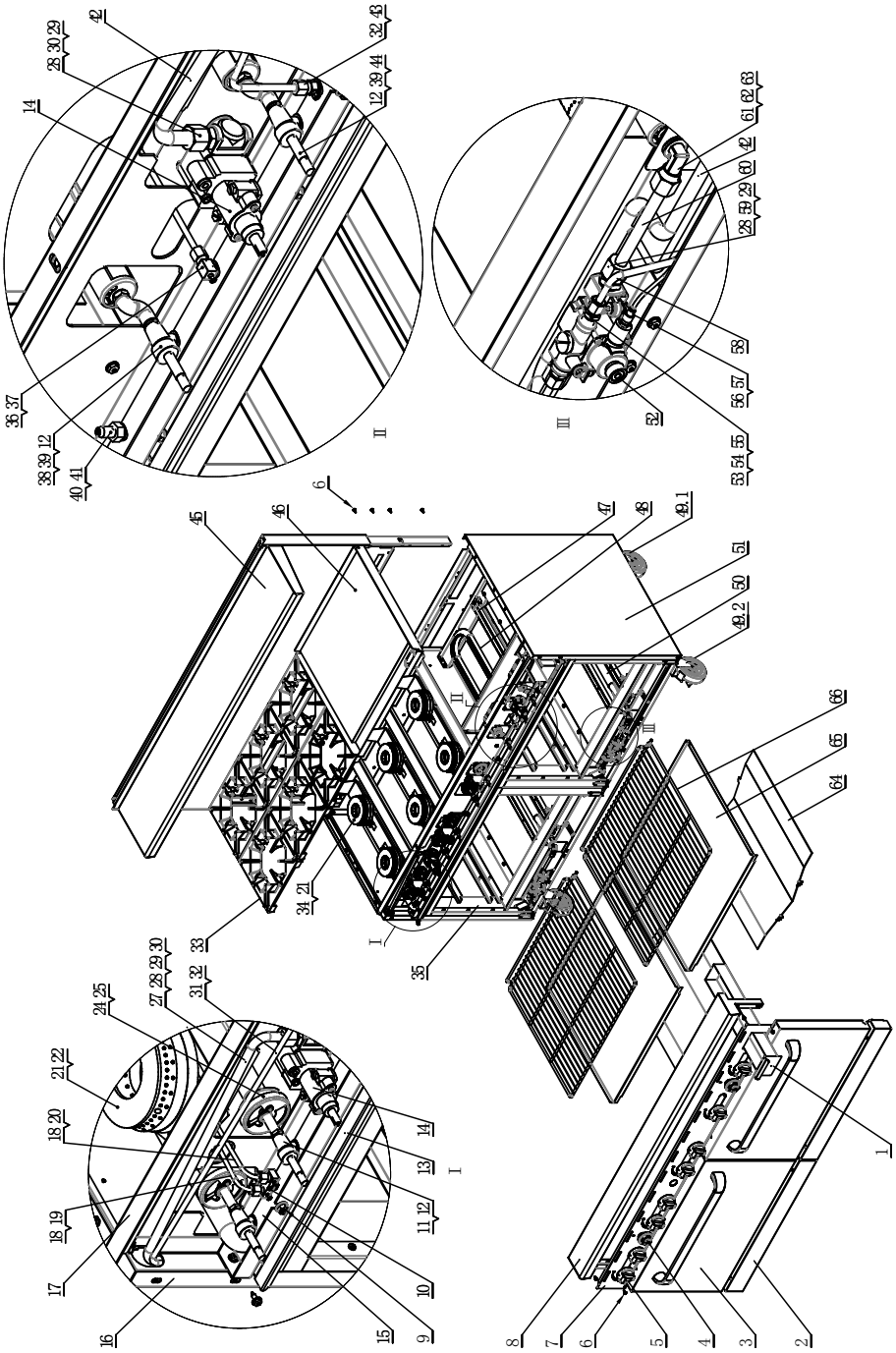

No.	Matters Code	Component name	Qty	Dimensions (mm)/Model	Notes
1	21207001009	Griddle oil Box accessory	1		
2	21107001064	Underside face plate of oven	2		
3	21207001010	Oven door assembly	2	755*460*52	
4	301140008	Oven thermostat valve knob	2		
5	301140001	Kirsite knob	8		
6	301081037	Galvanized hexagon head flange face self-tapping screw	42	ST4.8*12.5	
7	21107001068	Control panel	1		AGR-6B-24R (NG/LG)
	21107013068				AGR-6B-24L (NG/LG)
8	21207001006	Table-board front board assembly	1	1524*125*189	
9	301080002	Galvanized flange nut	10	M6	
10	301030007	Pilot light valve-double unit	3	AP6-1	
11	301040153	Gas restaurant ranges nozzle(NG)	6	NG38 Φ2.57	
	301040154	Gas restaurant ranges nozzle(LP)		LP51 Φ1.70	
12	301030002	Stopcock	8		
13	21107001067	Catch tray of gas restaurant ranges	1		
14	301030038	Oven thermostat valve	2	BJWA-25PD0548	
15	301070031	input pipe	1		AGR-6B-24R (NG/LG)
	301070047				AGR-6B-24L (NG/LG)
16	21107001060	Side block panel (left)	1		
17	21207001025	Upper stove body assembly	1	1520*710*200	AGR-6B-24R (NG/LG)
	21207013004				AGR-6B-24L (NG/LG)
18	301060003	Pilot light head	8	A73007/TipΦ4.7	
19	21107001084	Pilot light intake pipe of	3		

		gas restaurant ranges (short)			
20	21107001085	Pilot light intake pipe of gas restaurant ranges (long)	3		
21	301020040	Burner lid	6		
22	301020041	Short ejector	3		
24	301990001	Air door cover of gas restaurant ranges	6		
25	301081002	Stainless steel cross pan head screw	6	M4*8	
27	301050045	Main fire intake pipe of stove (left)	1		
28	301080007	Copper nut	8	M16	
29	301050012	Copper hoop	8	Φ10	
30	301060051	Copper connector	2	1/4" to M16	
31	301050037	Pilot fire input fire of oven (left)	1		
32	301030037	Normally open fire valve (single)	2	AP5-2	
33	301020016	Octangular cooking grates	6		
34	301020042	Long ejector	3		
35	21207001001	Lower stove body assembly	1	1520*696*572	
36	21107001071	Griddle spark air inlet（U）	2		AGR-6B-24R (NG/LG)
	21107001073	Griddle spark air inlet（I）			AGR-6B-24L (NG/LG)
37	301030001	Normally open fire valve (single)	2	AP7-1	
38	301040026	Griddle U-shaped burner nozzle（NG）	1	NG42 Φ2.3	
	301040027	Griddle U-shaped burner nozzle（LP）		LP52 Φ1.6	
39	301050040	Z-shape adapter	2		
40	301060002	Needle type pressure measuring connector screw	1	M5*23	
41	301060001	Needle type pressure measuring connector	1	NPT 1/8"-27	
42	301050042	Pilot fire intake pipe of stove (right)	1		

43	301050038	Pilot fire inlet tube of stove (right)	1		AGR-6B-24L (NG/LG)
	301050044	Pilot fire inlet tube of stove (right)	1		AGR-6B-24R (NG/LG)
44	301040028	Griddle I-shaped burner nozzle（NG）	1	NG45 Φ2.1	
	301040029	Griddle I-shaped burner nozzle（LP）		LP54 Φ1.45	
45	21207001007	Back guard assembly	1	1524*340*967	
46	21207001008	Griddle plate accessory	1	610*608*60	AGR-6B-24R (NG/LG)
	21207013008				AGR-6B-24L (NG/LG)
47	301010012	I-shaped burner	1		
48	301010007	U-shaped burner	1		
49.1	301990036	wheels without brake	2		
49.2	301990035	wheels with brake	2		
50	301010011	Stove burner	2		
51	21107001061	Side block panel (right)	1		
52	301030039	Oven safety valve	2	TS11J-3211-1-0	
53	301060053	Copper nut	4	M10	
54	301050039	Copper hoop	4	Φ6	
55	301060054	Copper connector	4	7/16" to M10	
56	301030041	Kindling support（NG）	2		
	301030042	Kindling support(LP)			
57	301030049	Thermocouple	2		
58	301050036	Pilot fire exit tube of stove	2		
59	301060052	Copper connector	4	11/16" to M16	
60	21107001072	Main fire intake pipe of stove	2		
61	301050014	Male copper elbow	2	M16 to 3/8"-27UNS	
62	301080008	Bronze locknut	2		
63	301040030	Oven burner nozzle(NG)	2	NG39 Φ2.5	
	301040027	Oven burner nozzle(LP)		LP52 Φ1.6	
64	21107001062	Radiant panel of stove	2		
65	21407001005	Stove base plate	2		
66	301100012	Stove net rack	4		

Appendix 3. Accessories List

AGR-6B-24R(NG/LG)/AGR-6B-24L(NG/LG)

Accessory	Accessory No.	Quantity of accessories
wheels without brake	301990036	2 pcs
wheels with brake	301990035	2 pcs
Underside face plate of stove	21107001064	2 pcs
Stove net rack	301100012	4 pcs
Rear panel assembly of stove	21207001007	1 pc
Galvanized hexagon head flange face self-tapping screw	301081037	21 pcs
M6*12 stainless steel hexagon bolt	301081019	2 pcs
M6 galvanized flat gasket	301082001	2 pcs
M6 stainless steel spring washer	301082018	2 pcs
Pressure maintaining valve	301030044 (natural gas)	1 pc
	301030013 (liquefied gas)	
Instructions and attached drawings		1 pc

Our products have the advantages of good durability and low maintenance charge. But to update some components and necessary maintenance, can prolong life length of the products. Contact the dealer for assistance. To avoid confusion, please follow the format of “Appendix 2. Explosive view of product and parts” in this manual.

Commercial Kitchen Equipment Parts

Find more Atosa equipment resources at

parthubz.com/equipment/atosa

Need parts or service?

Call 833-700-8006

support@parthubz.com

parthubz.com