Commercial Kitchen Equipment Parts

ATOSA MBF8005GR

Atosa MBF8005GR Specification Sheet

Provided by PartHubz

parthubz.com

833-700-8006 | support@parthubz.com

ATOSA USA, INC.
Toll Free: 855-855-0399 Email: info@atosausa.com
www.atosa.com | www.atosausa.com
California, Colorado, Florida, Georgia, Illinois,
New Jersey, Ohio, Texas, Washington

"WE MAKE THE KITCHEN BETTER!"

Top Mount Reach-In Refrigerators

MODELS:

MBF15RSGR / MBF15RSGRL / MBF8004GR
MBF8004GRL / MBF8005GR / MBF8006GR

MBF15RSGR

MBF15RSGRL

MBF8004GR

Standard Features

- Top mount compressor with environmentally friendly R290 refrigerant
- Stainless steel exterior & interior
- Electronic temperature controller
- Maintains temperatures between 35°F – 38°F
- LED interior light(s)
- Recessed door handle(s)
- Door lock(s) standard
- Magnetic door gasket(s) standard for positive door seal
- Pre-installed casters
- Three (3) pre-installed shelves per section
- Down duct refrigeration to ensure even distribution of air
- Wall bracket standard for MBF15RSGR(L) and is required for use

MBF8004GRL

MBF8005GR

Optional Accessories

- Extra shelves – includes 4 shelf clips per shelf
  MBF15RSGR(L) shelf part #: R060040000003
  MBF8004GR(L) shelf part #: W0402389
  MBF8005GR shelf part #: W0402385
  MBF8006GR shelf part #: W0402385 left/right shelf,
  part #: W0402386 middle shelf

MBF8006GR

For the best results of food preservation we recommend setting your refrigerator between 35°F to 38 °F

1. Don't forget to leave the unit some room to breathe!
2. Please clean the condenser frequently to give the unit more fresh air.

2 YEAR PARTS AND LABOR WARRANTY
5 YEAR COMPRESSOR PART WARRANTY

MBF8004GR(L)
MBF8005GR
MBF8006GR

REV. 09/25

ATOSA USA, INC.
Toll Free: 855-855-0399 Email: info@atosausa.com
www.atosa.com | www.atosausa.com
California, Colorado, Florida, Georgia, Illinois,
New Jersey, Ohio, Texas, Washington

"WE MAKE THE KITCHEN BETTER!"

SPECIFICATIONS

Models	Door	Capacity (Cu.Ft.)	Shelves	Casters (inch)	Rated Current (A)	Voltage (V/Hz/Ph)	HP	Refrigerant	Exterior Dimensions (inch)	Net Weight (lb)	Gross Weight (lb)
MBF15RSGR	1	13	3	4	2.1	115/60/1	1/7	R290	$17^{3/4}\times37\times81^{1/2}$	192	270
MBF15RSGRL	1	13	3	4	2.1	115/60/1	1/7	R290	$17^{3/4}\times37\times81^{1/2}$	192	270
MBF8004GR	1	21.4	3	4	2.1	115/60/1	1/7	R290	$28^{3/4}\times31^{3/4}\times81^{3/8}$	220	254
MBF8004GRL	1	21.4	3	4	2.1	115/60/1	1/7	R290	$28^{3/4}\times31^{3/4}\times81^{3/8}$	220	254
MBF8005GR	2	43.2	6	4	3.2	115/60/1	1/5	R290	$51^{3/4}\times31^{3/4}\times81^{3/8}$	340	390
MBF8006GR	3	64.9	9	4	4.2	115/60/1	1/4	R290	$77^{3/4}\times31^{3/4}\times81^{3/8}$	472	551

PLAN VIEW

MBF8004GR **MBF8004GRL** **MBF8005GR** **MBF8006GR**

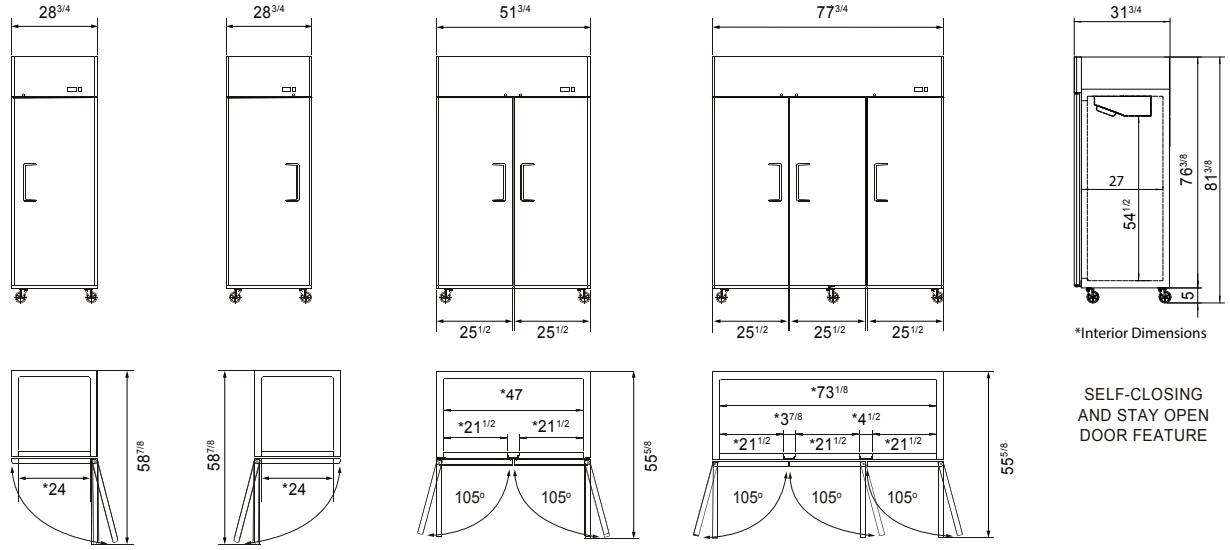

MBF15RSGR **MBF15RSGRL**

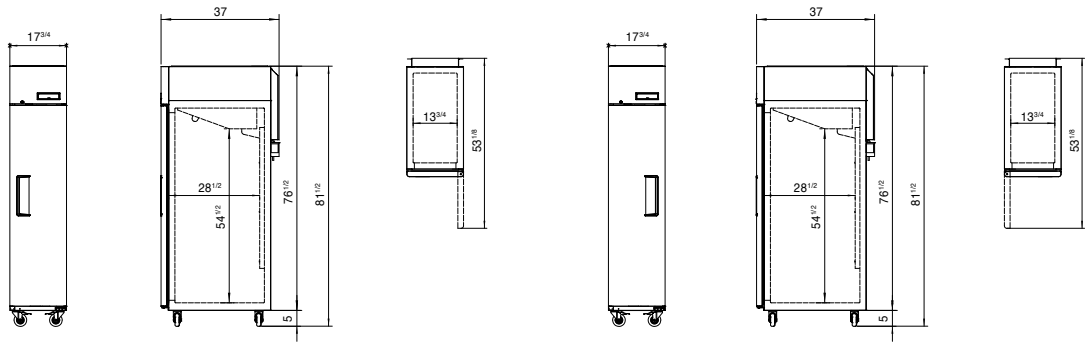

Casters Epoxy shelves Door lock Down duct Temperature control

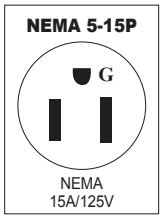

Atosa is continuously improving products. Specifications are subject to change without notice.

Commercial Kitchen Equipment Parts

Find more Atosa equipment resources at

parthubz.com/equipment/atosa

Need parts or service?

Call 833-700-8006

support@parthubz.com

parthubz.com