Commercial Kitchen Equipment Parts

ATOSA MBF8506GR

Atosa MBF8506GR Specification Sheet

Provided by PartHubz

parthubz.com

833-700-8006 | support@parthubz.com

ATOSA USA, INC.
Toll Free: 855-855-0399 Email: info@atosausa.com
www.atosa.com | www.atosausa.com
California, Colorado, Florida, Georgia, Illinois,
New Jersey, Ohio, Texas, Washington

"WE MAKE THE KITCHEN BETTER!"

MODELS:

MBF8519GR / MBF8532GR / MBF8505GR
MBF8505GRL / MBF8506GR / MBF8507GR / MBF8508GR

Bottom Mount Reach-In Refrigerators

Standard Features

- Bottom mount compressor units with environmentally friendly R290 refrigerant
- Stainless steel exterior & interior
- Electronic temperature controller
- Maintains temperatures between 35°F – 38°F
- LED interior light(s)
- Recessed door handle(s)
- Door lock(s) standard
- Magnetic door gasket(s) standard for positive door seal
- Pre-installed casters
- Three (3) pre-installed shelves per section
- Down duct refrigeration to ensure even distribution of air

Optional Accessories

- Extra shelves – includes 4 shelf clips per shelf
  MBF8519GR shelf part #: W0402316
  MBF8532GR shelf part #: W0402315
  MBF8505GR/GRL shelf part #: W0402393
  MBF8507GR shelf part #: W0402387
  MBF8508GR shelf part #: W0402387 left/right shelf, part #: W0402388 middle shelf

MBF8519GR

MBF8532GR

MBF8505GR

MBF8505GRL

MBF8506GR

MBF8507GR

MBF8508GR

For the best results of food preservation we recommend setting your refrigerator between 35°F to 38 °F

1. Don't forget to leave the unit some room to breathe!
2. Please clean the condenser frequently to give the unit more fresh air.

2 YEAR PARTS AND LABOR WARRANTY
5 YEAR COMPRESSOR PART WARRANTY

ATOSA USA, INC.
Toll Free: 855-855-0399 Email: info@atosausa.com
www.atosa.com | www.atosausa.com
California, Colorado, Florida, Georgia, Illinois,
New Jersey, Ohio, Texas, Washington

"WE MAKE THE KITCHEN BETTER!"

SPECIFICATIONS

Models	Door	Capacity (Cu.Ft.)	Shelves	Casters (inch)	Rated Current (A)	Voltage (V/Hz/Ph)	HP	Refrigerant	Exterior Dimensions (inch)	Net Weight (lb)	Gross Weight (lb)
MBF8519GR	1	8.3	3	2	2.1	115/60/1	1/7	R290	$24^{1/4} \times 24 \times 63^{1/4}$	176	209
MBF8532GR	1	12.57	3	4	2.1	115/60/1	1/4	R290	$25^{5/8} \times 26 \times 76^{3/8}$	232	276
MBF8505GR	1	19.1	3	4	2.1	115/60/1	1/7	R290	$27 \times 31^{7/10} \times 83^{1/10}$	249	282
MBF8505GRL	1	19.1	3	4	2.1	115/60/1	1/7	R290	$27 \times 31^{7/10} \times 83^{1/10}$	249	282
MBF8506GR	2	28.5	6	4	3.2	115/60/1	1/5	R290	$39^{1/2} \times 31^{7/10} \times 83^{1/10}$	317	365
MBF8507GR	2	43.8	6	4	3.2	115/60/1	1/5	R290	$54^{2/5} \times 31^{7/10} \times 83^{1/10}$	397	452
MBF8508GR	3	68	9	4	4.2	115/60/1	1/4	R290	$81^{9/10} \times 31^{7/10} \times 83^{1/10}$	538	615

PLAN VIEW

MBF8519GR

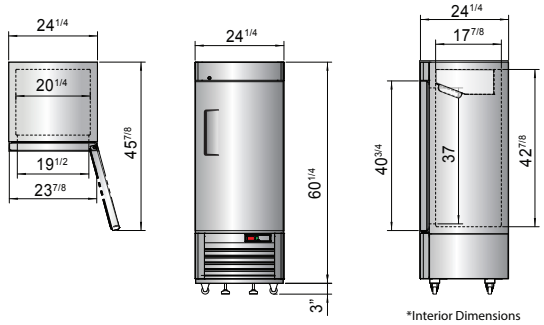

MBF8532GR

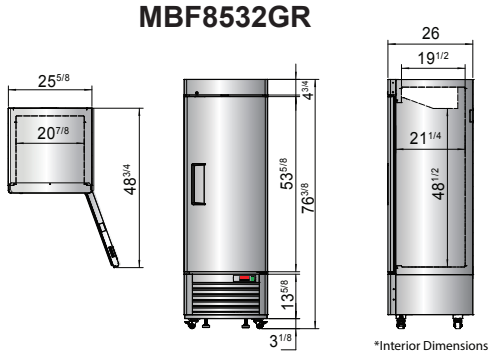

MBF8505GR MBF8505GRL MBF8506GR MBF8507GR MBF8508GR

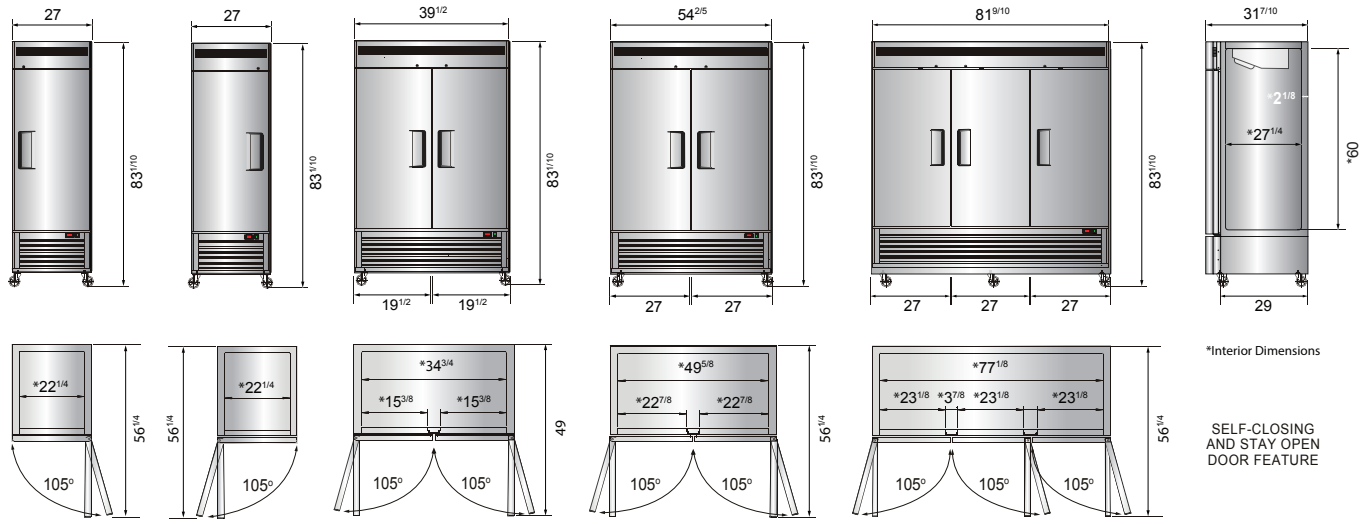

SELF-CLOSING AND STAY OPEN DOOR FEATURE

Casters | Epoxy shelves | Door lock | Down duct | Temperature control

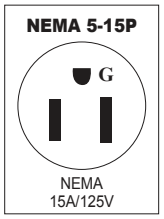

Atosa is continuously improving products. Specifications are subject to change without notice.

Commercial Kitchen Equipment Parts

Find more Atosa equipment resources at

parthubz.com/equipment/atosa

Need parts or service?

Call 833-700-8006

support@parthubz.com

parthubz.com