Commercial Kitchen Equipment Parts

ATOSA MPF8202GR

Atosa MPF8202GR document

Provided by PartHubz

parthubz.com

833-700-8006 | support@parthubz.com

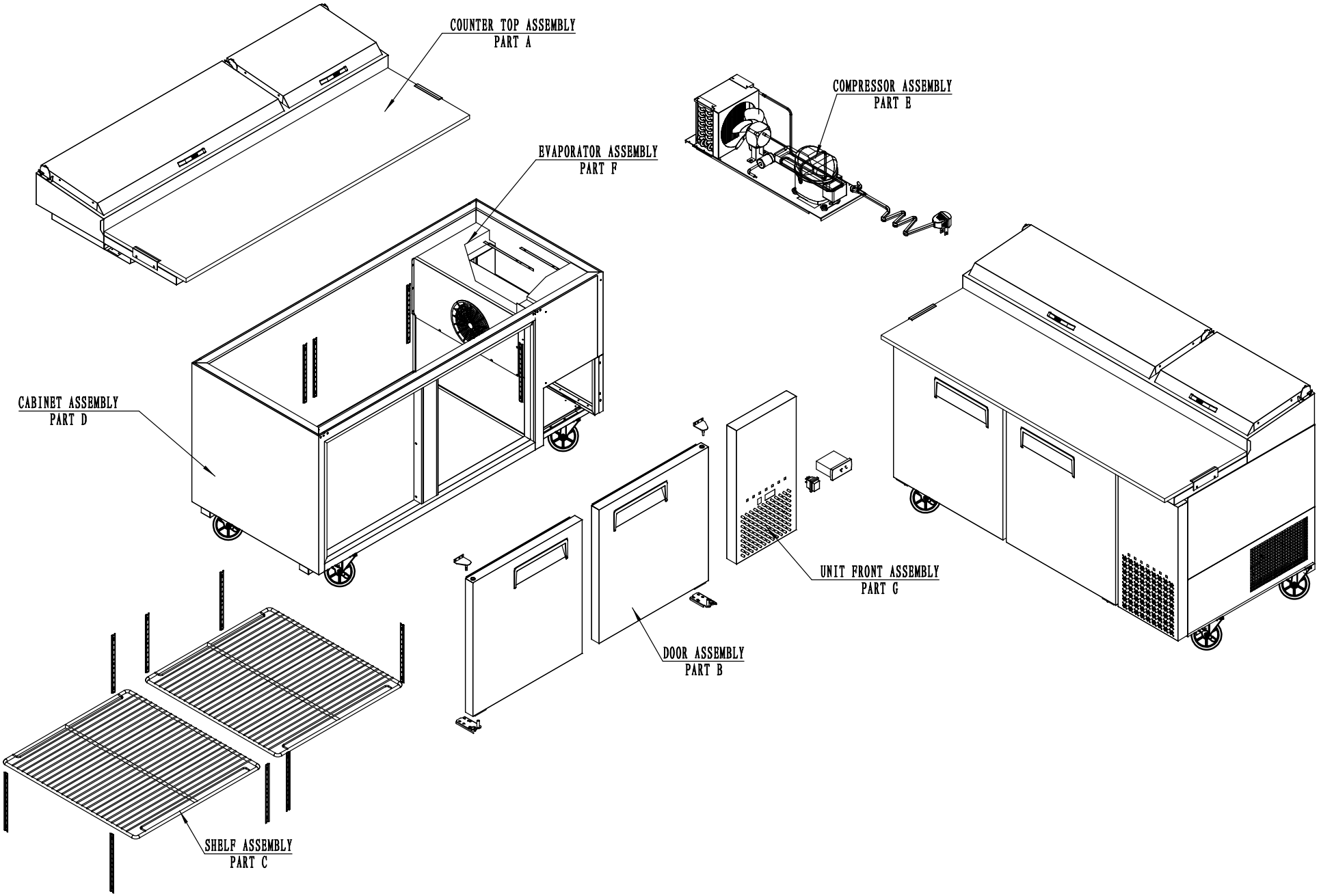
COUNTER TOP ASSEMBLY
PART A
COMPRESSOR ASSEMBLY
PART E
EVAPORATOR ASSEMBLY
PART F
CABINET ASSEMBLY
PART D
UNIT FRONT ASSEMBLY
PART G
DOOR ASSEMBLY
PART B
SHELF ASSEMBLY
PART C

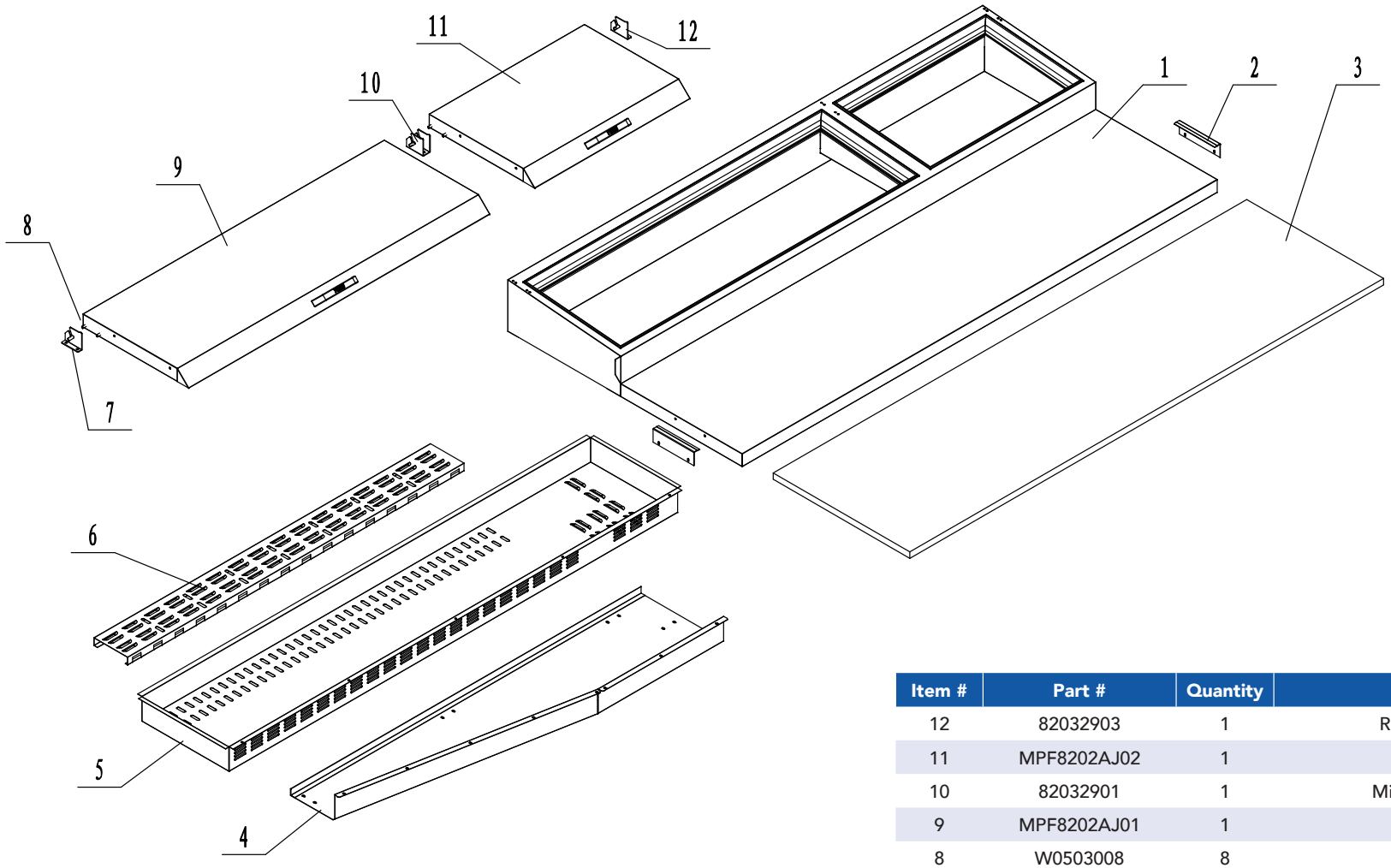

Item #	Part #	Quantity	Description
12	82032903	1	Right Hinge For Lid
11	MPF8202AJ02	1	Long Lid - Right
10	82032901	1	Middle Hinge For Lid
9	MPF8202AJ01	1	Long Lid - Left
8	W0503008	8	M4 Nut For Lid
7	82032902	1	Left Hinge For Lid
6	82021702	1	Airflow Duct Cover
5	82021703	1	Main Airflow Channel
4	82021701	1	Airflow Channel
3	W0499216	1	Cutting Board
2	82012701	2	Bracket For Cutting Board
1	MPF8202FF01	1	Top of the Pizza Table

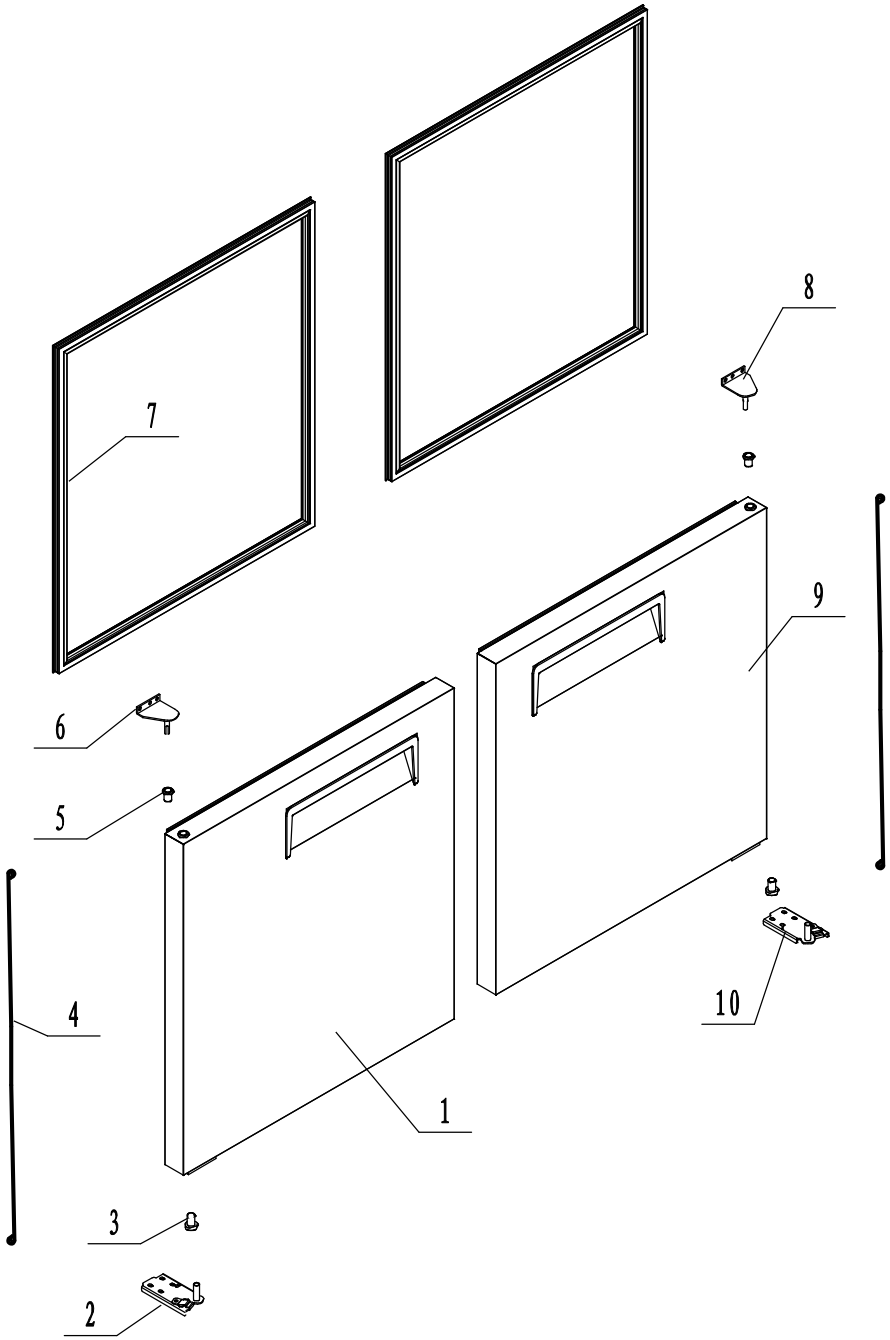

Item #	Part #	Quantity	Description
10	W0604028	1	Right Bottom Hinge
9	MPF8202FC02	1	Door Body Assembly - Right
8	W0604026	1	Right Top Hinge
7	W0404656	2	Door Gasket
6	W0604027	1	Left Top Hinge
5	W0409845	1	Door Shaft Sleeve Top
4	W0604922	2	Door Spring Rod
3	W0409843	2	Door Shaft Sleeve Bottom
2	W0604029	1	Left Bottom Hinge
1	MPF8202FC01	1	Door Body Assembly - Left

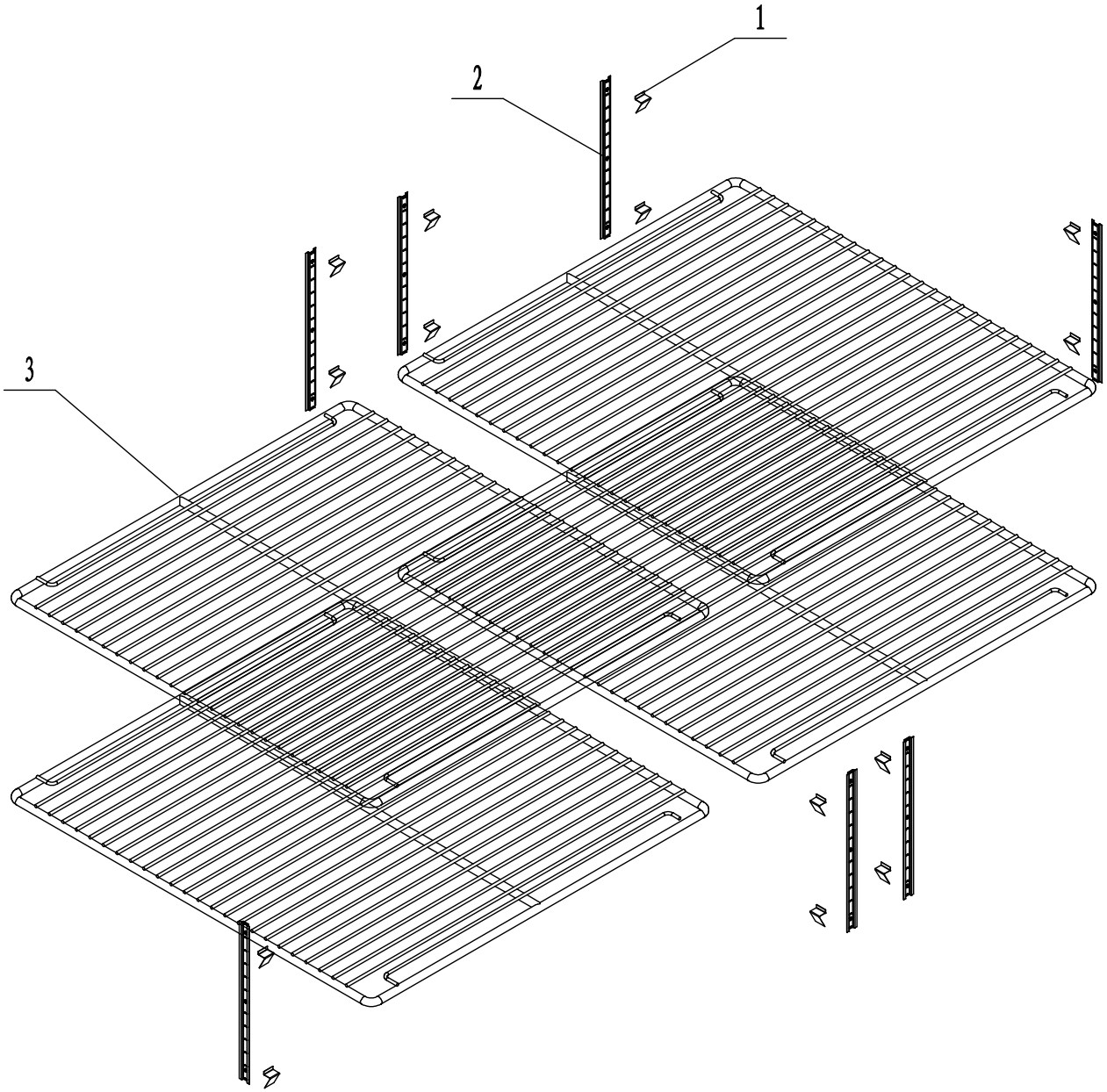

Item #	Part #	Quantity	Description
3	W0402573	4	Shelf
2	00600013	8	Pilaster For Shelf
1	66490313	16	Shelf Support Clip

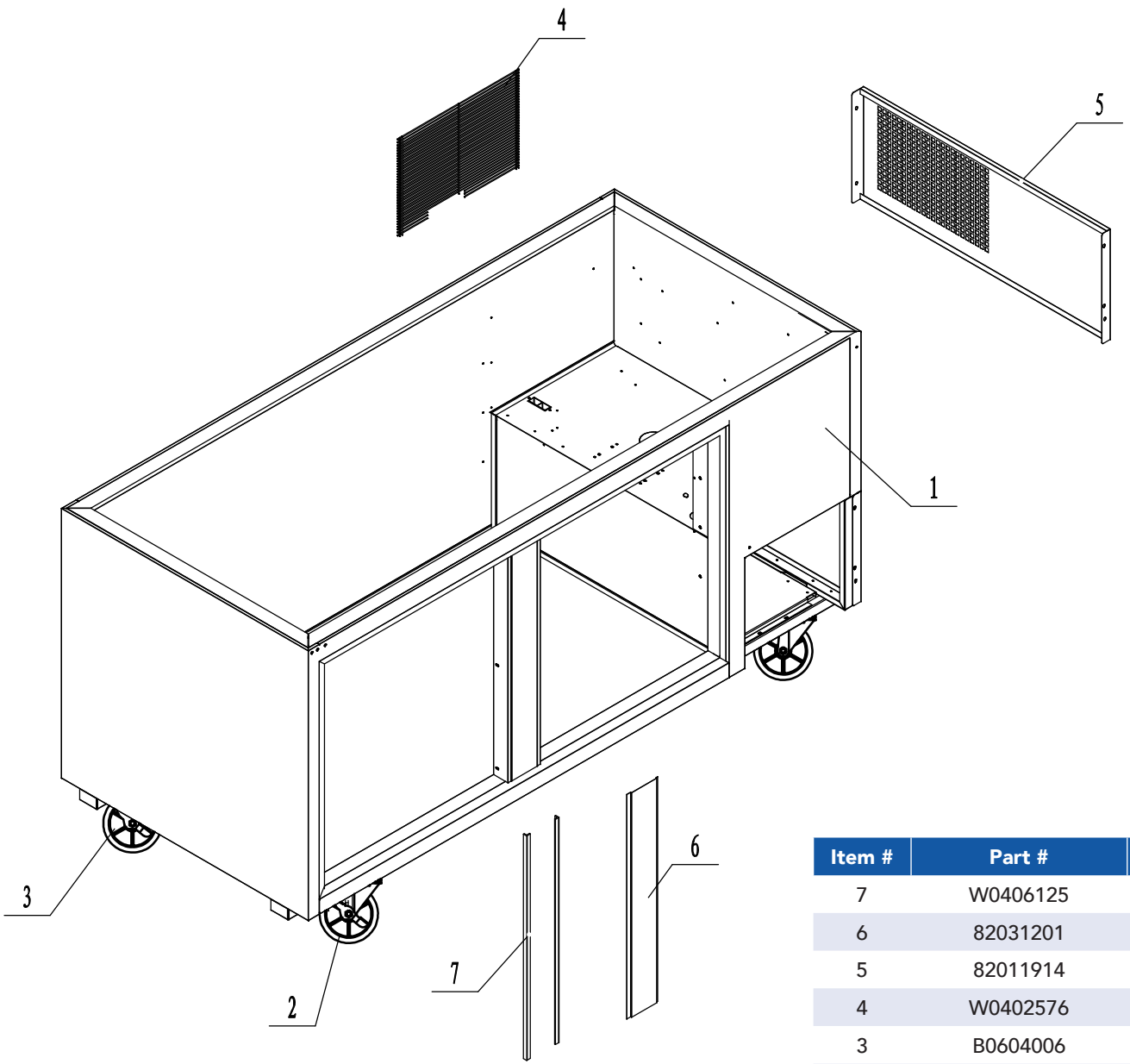

Item #	Part #	Quantity	Description
7	W0406125	2	Middle Mullion Frame Strip
6	82031201	1	Middle Mullion Front Plate
5	82011914	1	Side Protect Cover
4	W0402576	1	Rear Protect Barrier
3	B0604006	2	Caster - 5" Wheel
2	B0604007	2	Caster - 5" Wheel With Bracket
1	MPF8202FA01	1	Cabinet Body Assembly

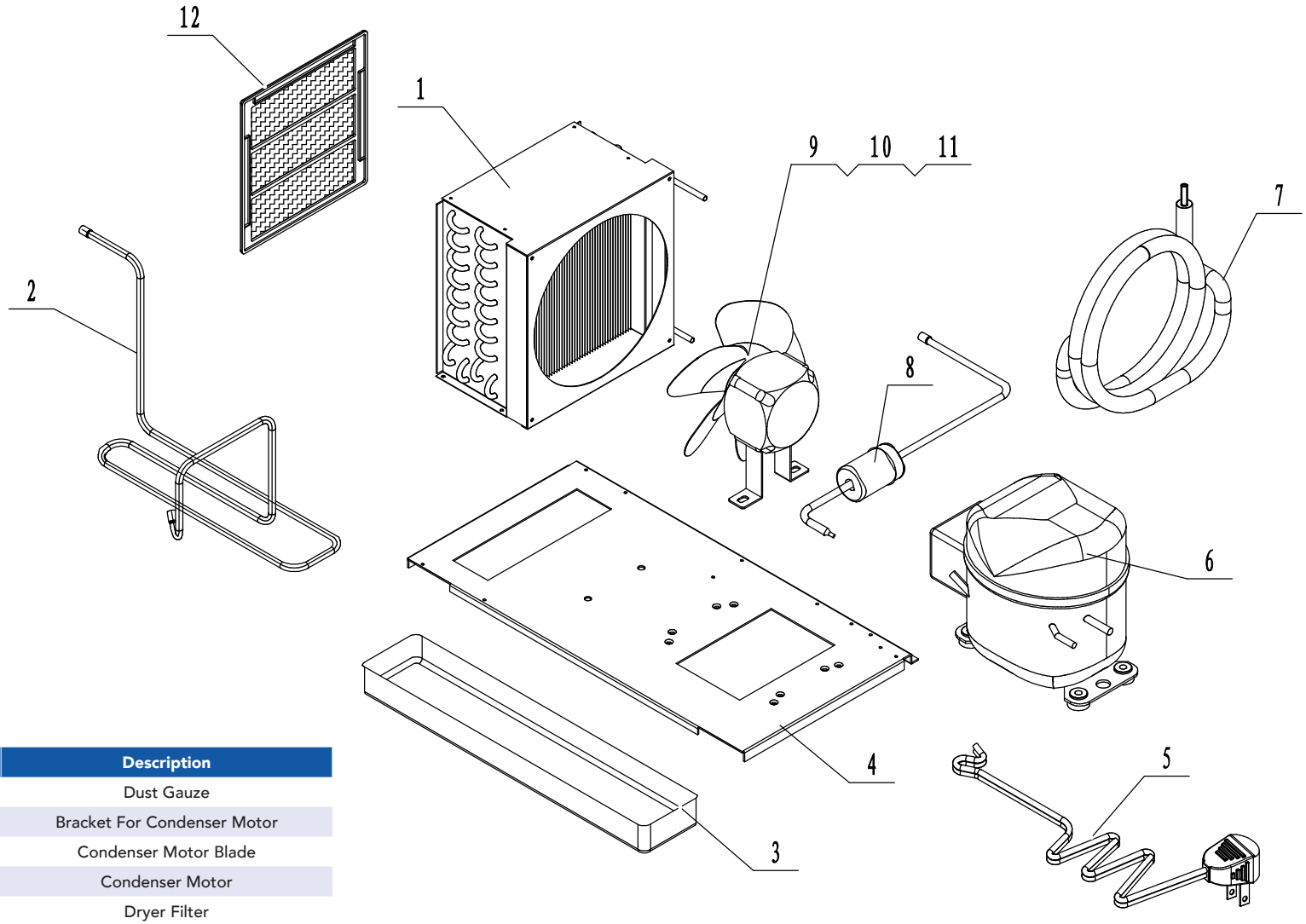

Item #	Part #	Quantity	Description
12	W0499225	1	Dust Gauze
11	W0604079	1	Bracket For Condenser Motor
10	W0301060	1	Condenser Motor Blade
9	W0301905	1	Condenser Motor
8	W0204003	1	Dryer Filter
7	W0210571	1	Suction Tube B with Capillary
6	W0201164	1	Compressor
5	W0305134	1	Power Cord
4	82012102	1	Board For Comp Assembly
3	W0411208	1	Bottom Evap Water Pan
2	W0210572	1	Coil Pipe Radiator
1	W0203065	1	Condenser

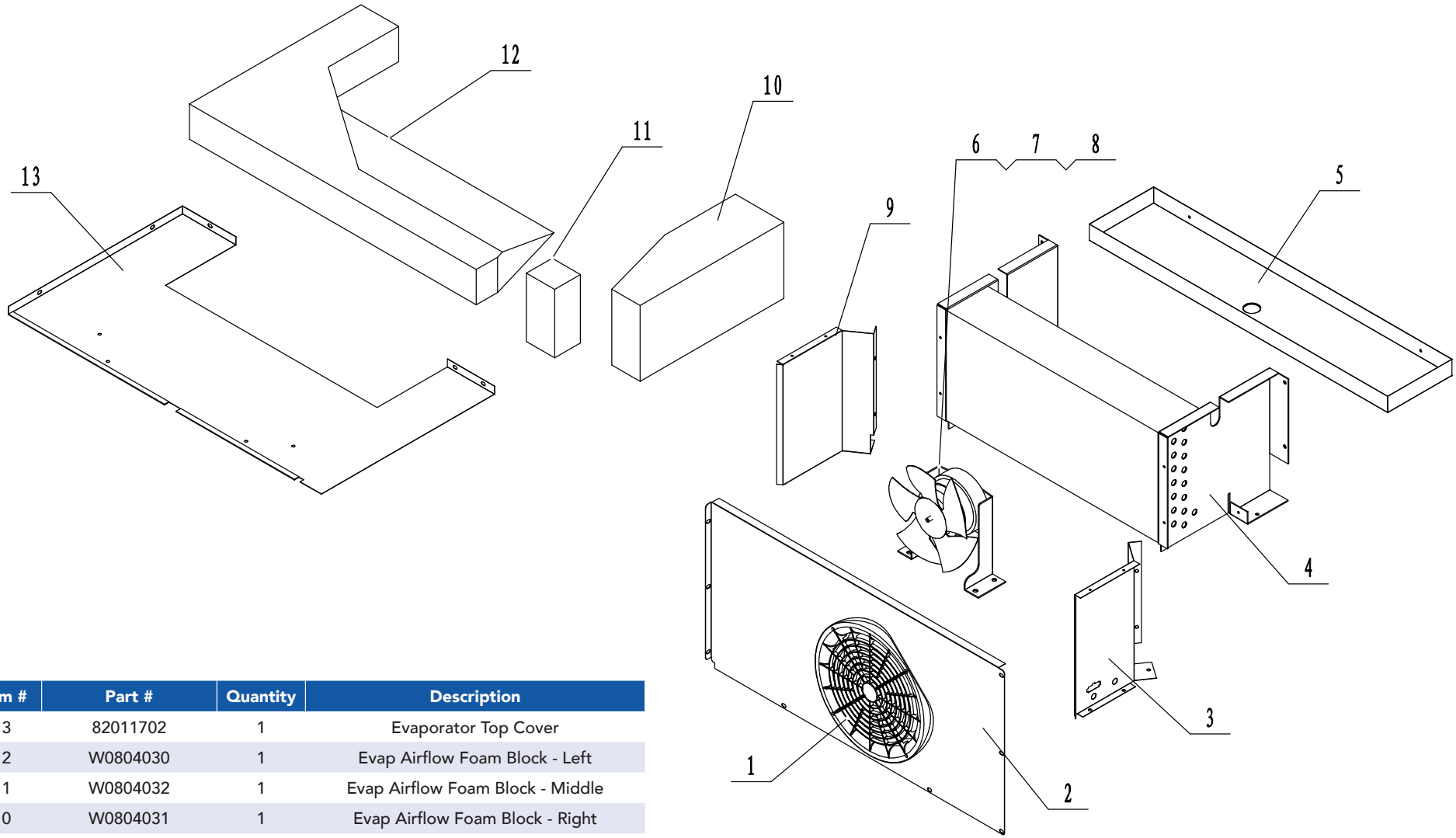

Item #	Part #	Quantity	Description
13	82011702	1	Evaporator Top Cover
12	W0804030	1	Evap Airflow Foam Block - Left
11	W0804032	1	Evap Airflow Foam Block - Middle
10	W0804031	1	Evap Airflow Foam Block - Right
9	82011909	1	Evap Airflow Left Cover
8	82012302	1	Bracket For Evaportator Motor
7	W0301078	1	Evaportator Motor Blade
6	W0301912	1	Evaportator Motor
5	W0411214	1	Evap Drain Pan
4	W0202125	1	Evaporator
3	82011910	1	Evap Airflow Right Cover
2	82011705	1	Evaporator Front Cover
1	W0409080	1	Evap Motor Protect Cover

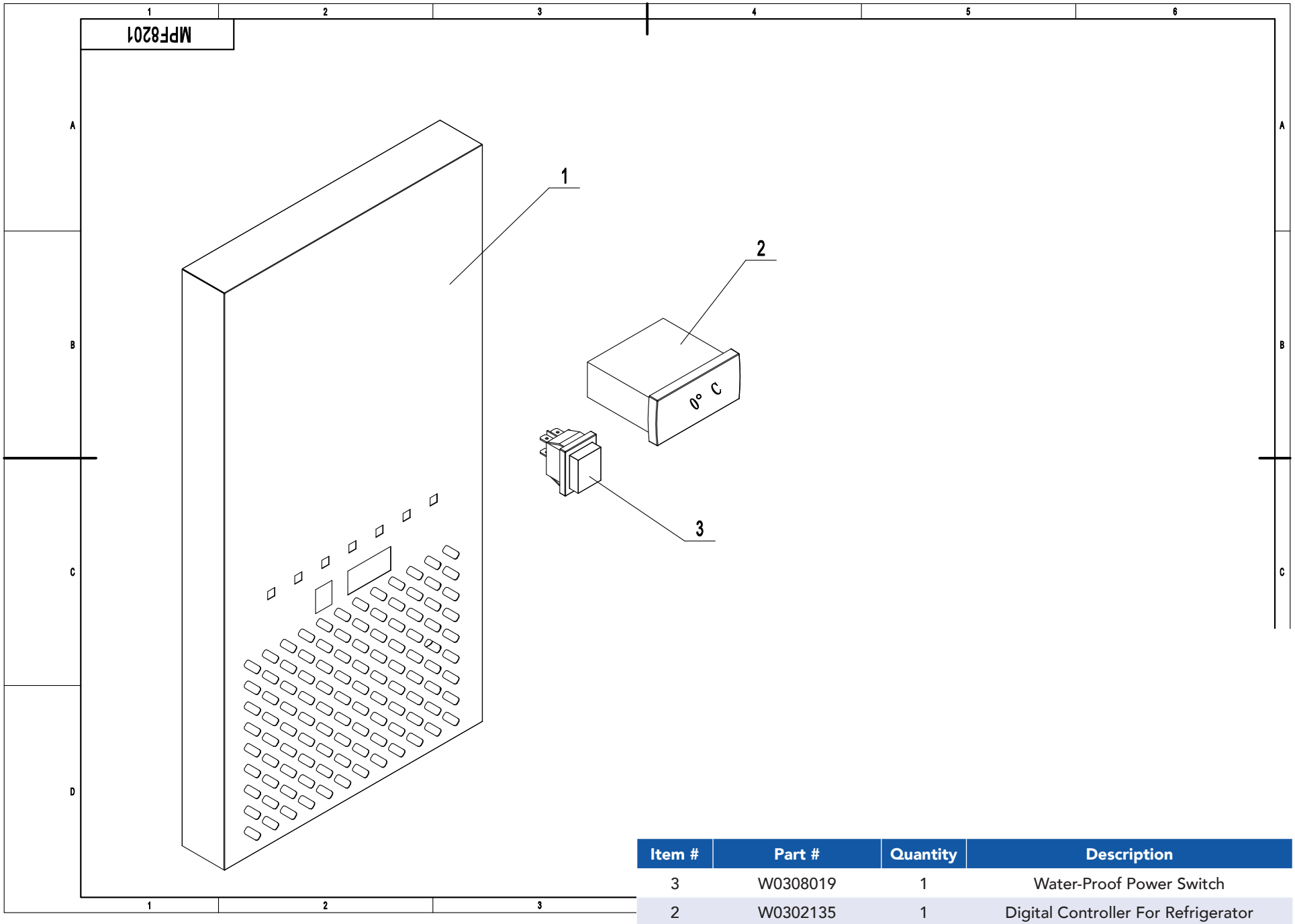

Item #	Part #	Quantity	Description
3	W0308019	1	Water-Proof Power Switch
2	W0302135	1	Digital Controller For Refrigerator
1	MPF82031705	1	Front Control Panel

Commercial Kitchen Equipment Parts

Find more Atosa equipment resources at

parthubz.com/equipment/atosa

Need parts or service?

Call 833-700-8006

support@parthubz.com

parthubz.com