Commercial Kitchen Equipment Parts

BLODGETT DFG-100

Blodgett DFG-100 User Manual

Provided by PartHubz

parthubz.com

833-700-8006 | support@parthubz.com

DFG-100-K12 & DFG-200-K12

GAS CONVECTION OVENS

INSTALLATION - OPERATION - MAINTENANCE

BLODGETT OVEN COMPANY

www.blodgett.com

42 Allen Martin Drive, Essex Junction, Vermont 05452 USA Telephone: (802) 658-6600 Fax: (802)864-0183

PN 58047 Rev D (3/18)

© 2018 - G.S. Blodgett Corporation

Your Service Agency's Address:

Model

Serial number

Oven installed by

Installation checked by

IMPORTANT

WARNING: Improper installation, adjustment, alternation, service or maintenance can cause property damage, injury or death. Read the instl-lation, operation and maintenance instructions thoroughly before installing or servicing this equipment.

INSTRUCTIONS TO BE FOLLOWED IN THE EVENT THE USER SMELLS GAS MUST BE POSTED IN A PROMINENT LOCATION. This information may be obtained by contacting your local gas supplier.

FOR YOUR SAFETY

Do not store or use gasoline or other flammable vapors or liquids in the vicinity of this or any other appliance.

The information contained in this manual is important for the proper installation, use, and maintenance of this oven. Adherence to these procedures and instructions will result in satisfactory baking results and long, trouble free service. Please read this manual carefully and retain it for future reference.

ERRORS: Descriptive, typographic or pictorial errors are subject to correction. Specifications are subject to change without notice.

TABLE OF CONTENTS

INSTALLATION

Oven Description and Specifications 2
Delivery and Location 3
Oven Assembly 4
- NSF Bolts 4
- Leg Attachment 5
- Caster Assembly 5
- Double Section Assembly 6
- Oven Leveling 6

Ventilation 7
Utility Connections - Standards and Codes 9
Gas Connection. 10
Electrical Connection 13
Initial Startup 14

OPERATION

Safety Information. 15
SSI-D Solid State Infinite Control with Digital Timer. 16
SSI-M Solid State Infinite Control with Manual Timer 17
General Guidelines for Operating Personnel 18
Suggested Times and Temperatures 19

MAINTENANCE

Cleaning and Preventative Maintenance 20
Troubleshooting Guide 21

Installation

Oven Description and Specifications

Cooking in a convection oven differs from cooking in a conventional deck or range oven since heated air is constantly recirculated over the product by a fan in an enclosed chamber. The moving air continually strips away the layer of cool air surrounding the product, quickly allowing the heat to penetrate. The result is a high quality product, cooked at a lower temperature in a shorter amount of time.

Blodgett convection ovens represent the latest advancement in energy efficiency, reliability, and ease of operation. Heat normally lost, is recirculated within the cooking chamber before being vented from the oven: resulting in substantial reductions in energy consumption and enhanced oven performance.

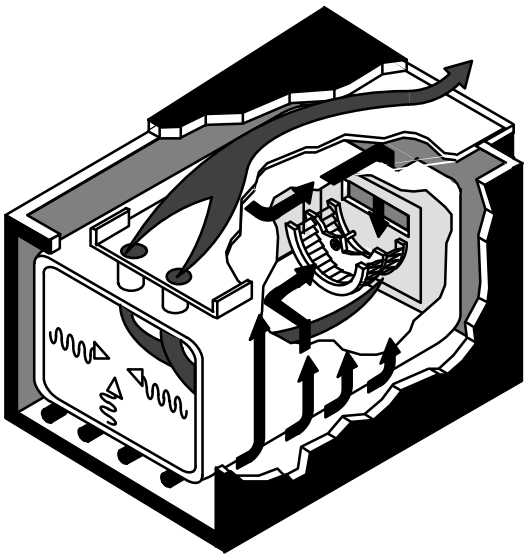

Air Flow Pattern for Blodgett DFG Convection Ovens

Figure 1

GAS RATINGS - DFG-100-K12-3, DFG-100-K12LH, DFG-200-K12 & DFG-200-K12LH				
	Natural Gas		**Propane**	
	US Units	**SI Units**	**US Units**	**SI Units**
US, Canada and General Export				
Heating Value	1000 BTU/cu.ft.	37.3 MJ/m3	2550 BTU/cu. ft.	95.0 MJ/m3
Specific Gravity (air=1.0)	0.63	0.63	1.53	1.53
Oven Input				
DFG-100-K12-3 / DFG-100-K12LH	55,000 BTU/hr	16.2 kW	55,000 BTU/hr	16.2 kW
DFG-200-K12 / DFG-200-K12LH	60,000 BTU/hr	17.6 kW	60,000 BTU/hr	17.6 kW
Main Burner Orifice Size				
DFG-100-K12-3 / DFG-100-K12LH	40 MTD*	2.5 mm	53 MTD*	1.5 mm
DFG-200-K12 / DFG-200-K12LH	38 MTD*	2.6 mm	1.55 mm	1.55 mm
DFG-100-K12-3 for Australia				
Oven Input	—	58 MJ/h	—	58 MJ/h
Main Burner Orifice Size	38 MTD*	2.6 mm	1/16” dia.	1.6 mm
*NOTE: * - Multiple Twist Drill*				

Delivery and Location

DELIVERY AND INSPECTION

All Blodgett ovens are shipped in containers to prevent damage. Upon delivery of your new oven:

- Inspect the shipping container for external damage. Any evidence of damage should be noted on the delivery receipt which must be signed by the driver.
- Uncrate the oven and check for internal damage. Carriers will accept claims for concealed damage if notified within fifteen days of delivery and the shipping container is retained for inspection.

The Blodgett Oven Company cannot assume responsibility for loss or damage suffered in transit. The carrier assumed full responsibility for delivery in good order when the shipment was accepted. We are, however, prepared to assist you if filing a claim is necessary.

OVEN LOCATION

The well planned and proper placement of your oven will result in long term operator convenience and satisfactory performance.

The following clearances must be maintained between the oven and any combustible or non-combustible construction.

DFG-100-K12

- Oven body right side - 2” (5cm)
- Oven body left side - 2” (5cm)
- Oven body back - 0” (0cm)
- Single and stacked oven bottom - 6” (15cm)

DFG-200-K12

- Oven body right side - 6” (15cm)
- Oven body left side - 6” (15cm)
- Oven body back - 6” (15cm)
- Single and stacked oven bottom- 6” (15cm)

The following clearances must be available for servicing.

- Oven body sides - 12” (30cm)
- Oven body back - 12” (30cm)

NOTE: On gas models, routine servicing can usually be accomplished within the limited movement provided by the gas hose restraint. If the oven needs to be moved further from the wall, the gas must first be turned off and disconnected from the oven before removing the restraint. Reconnect the restraint after the oven has been returned to its normal position.

It is essential that an adequate air supply to the oven be maintained to provide a sufficient flow of combustion and ventilation air.

- Place the oven in an area that is free of drafts.
- Keep the oven area free and clear of all combustibles such as paper, cardboard, and flammable liquids and solvents.
- NSF requires 6” of clearance on the bottom and sides of the unit for cleaning. Do not place the oven on a curb base or seal to a wall.
- The location must provide adequate clearance for the air opening into the combustion chamber.

Before making any utility connections to this oven, check the rating plate to be sure the oven specifications are compatible with the gas and electrical services supplied for the oven.

1. Pull out control panel. The rating plate attached to the inside of the control compartment.

- Do not place strong sources of heat such as open flame ranges, griddles, or charbroilers near the oven. If such an instance exists, it is highly recommended to purchase a heat shield, available from Blodgett.
- Note that if temperatures are too high, a safety shutdown may occur.
- Failure to comply may invalidate the oven warranty.

Oven Assembly

NSF BOLTS

These bolts are required by NSF to block any exposed hole on the back of an oven. This includes:

- any unit, single or stacked, without a back panel.
- any holes in stacked units not used for mounting stacking brackets.

1. Locate the 5/16” bolts that were shipped with the oven.
2. Install the bolts as shown.

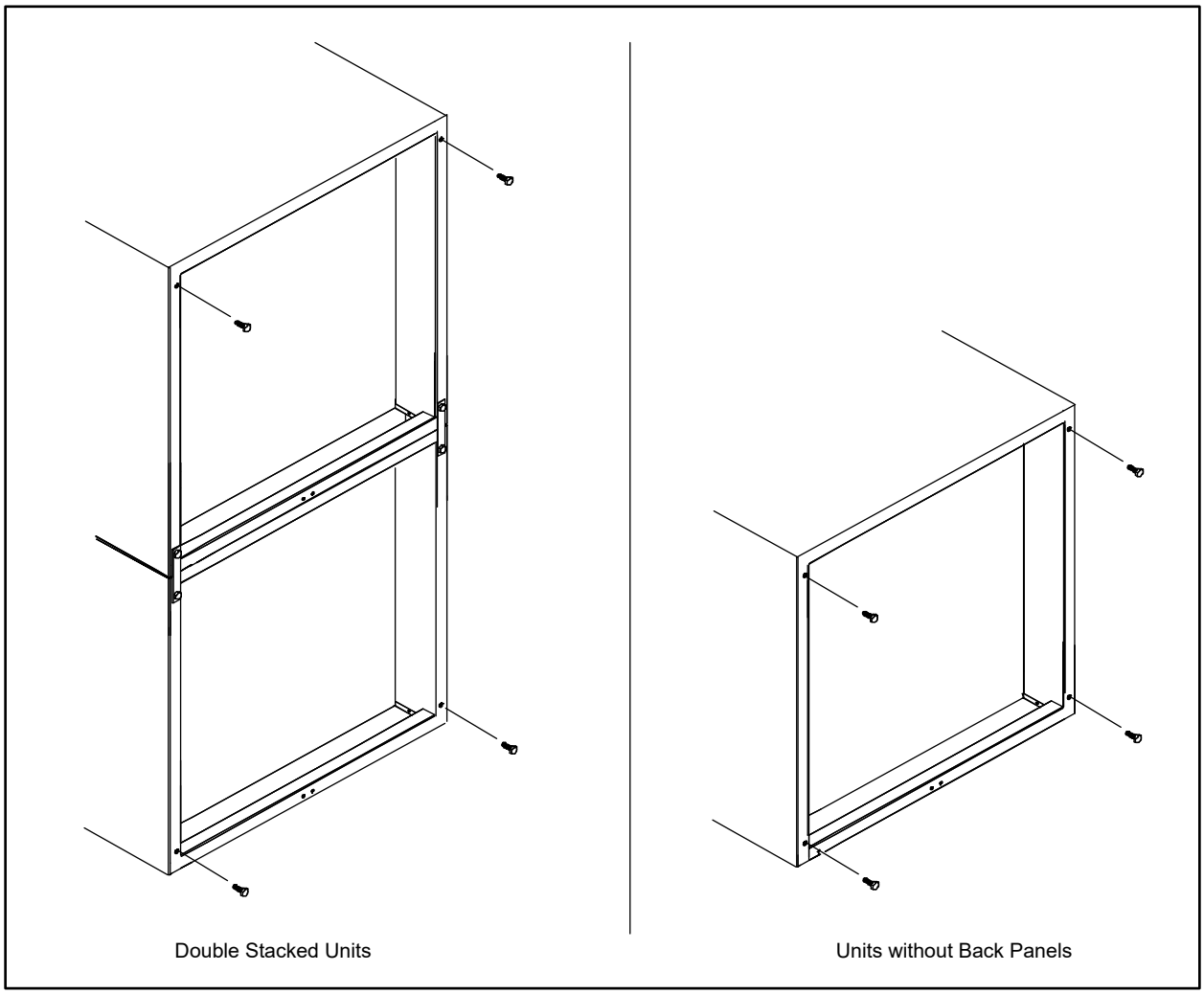

Figure 2

Oven Assembly

LEG ATTACHMENT

1. Push the oven onto a lift with the bottom of the oven down.
2. Align the threaded stud in each leg with the nut located inside each bottom corner of the oven frame. Turn the legs clockwise and tighten to the nearest full turn.
3. Align the two leg plate holes in each leg with those in the oven bottom. Secure each leg using two 1/2” bolts.

   NOTE: If using casters see CASTER ASSEMBLY before proceeding.

4. Level the oven by screwing the adjustable leg feet in or out as necessary.

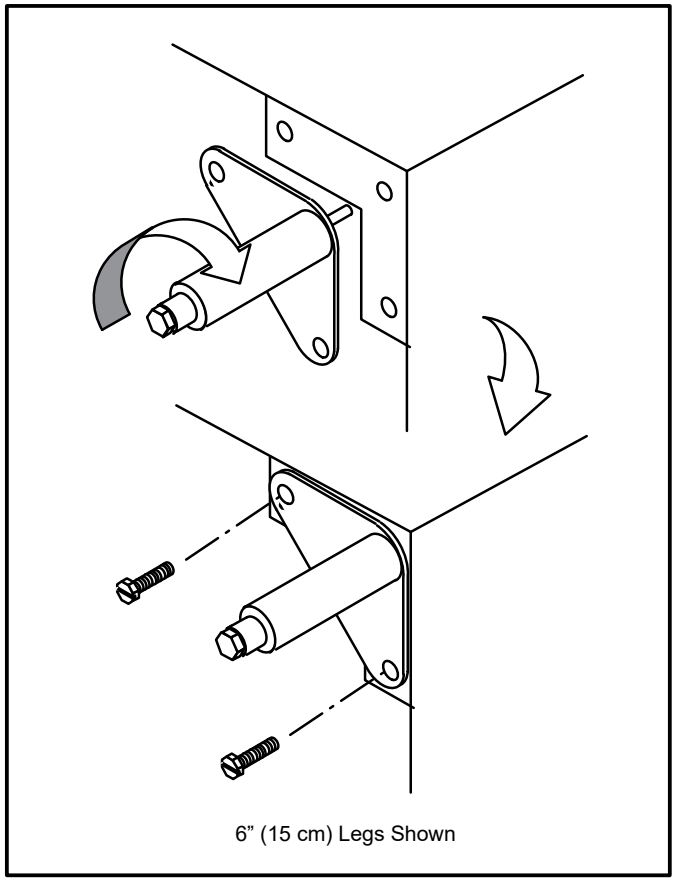

Figure 3

CASTER ASSEMBLY

NOTE: Install the locking casters on the front of the oven. Install the non-locking casters on the back of the oven.

NOTE: Use a gas hose restraint on all units with casters.

Casters for Single and Double Stacked Ovens:

1. Attach the legs as described.
2. Pry the adjustable feet out of the legs.
3. Insert one caster into each leg as shown. Tighten the lock nuts to secure the casters.

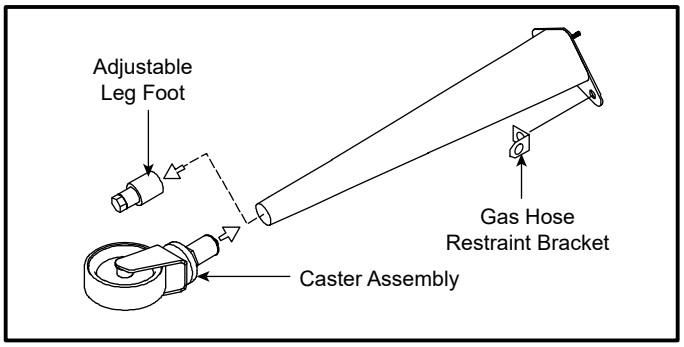

Figure 4

Low Profile Casters for Double Stacked Ovens:

1. Align the three holes in each caster assembly plate with those in the oven bottom. Secure each caster using three 1/2” bolts.

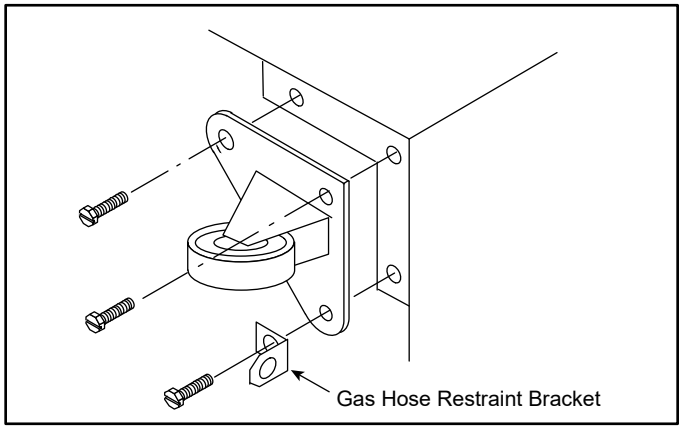

Figure 5

Oven Assembly

DOUBLE SECTION ASSEMBLY

NOTE: Old style ovens refer to units with painted exposed rear angle. New style ovens refer to units with rear angle iron enclosed in steel.

The following instructions apply to stacking two new style ovens.

1. Secure the short legs to the bottom sections as described.
2. Place the upper section in position on top of the lower oven.
3. Attach the stacking brackets using the remaining 5/16” bolts shipped with the ovens.
4. Attach the flue connector.

The following instructions apply to stacking a new style oven on an old style oven.

1. Secure the short legs to the bottom sections as described.
2. Place the upper section in position on top of the lower oven.
3. Attach the stacking brackets using the remaining 5/16” bolts shipped with the ovens.
4. Drill a clearance hole for a 5/16” bolt in the angle iron of the old style oven. Use the holes in the stacking brackets as a pilot.
5. Attach the stacking brackets to the old style oven with the 5/16” bolts and nuts provided in the kit.
6. Attach the flue connector.

WARNING:

When stacking ovens be sure to remove the single oven flue boxes prior to attaching three-piece connector.

OVEN LEVELING

After assembly, the oven should be leveled and moved to the operating location.

1. The oven can be leveled by adjusting the feet or casters located on the bottom of each leg.

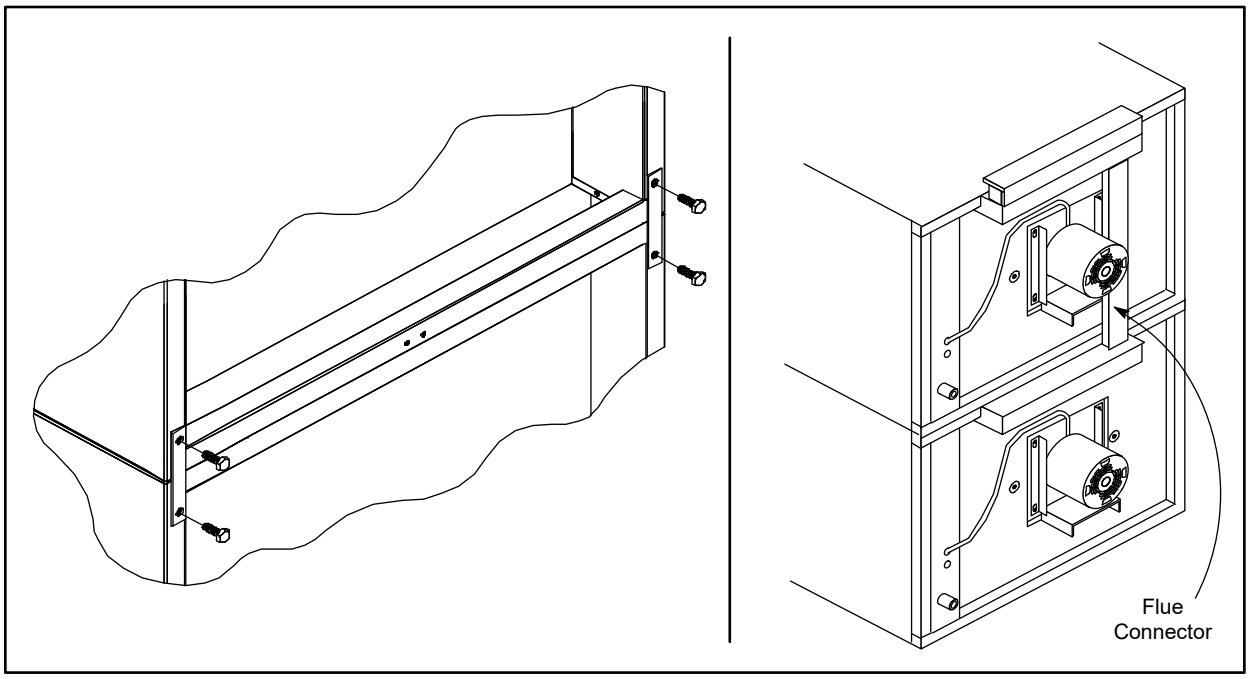

Figure 6

Ventilation

On gas models the installation of a proper ventilation system cannot be over emphasized. This system removes unwanted vapors and products of combustion from the operating area.

This oven may be vented using either:

- A mechanically driven, canopy type, exhaust hood, or
- A direct flue arrangement.

U.S. and Canadian installations

Refer to your local ventilation codes. In the absence of local codes, refer to the National ventilation code titled, “Standard for the Installation of Equipment for the Removal of Smoke and Grease Laden Vapors from Commercial Cooking Equipment”, NFPA-96-Latest Edition.

General export installations

Installation must conform with Local and National installation standards. Local installation codes and/or requirements may vary. If you have any questions regarding the proper installation and/or operation of your Blodgett oven, please contact your local distributor. If you do not have a local distributor, please call the Blodgett Oven Company at 0011-802-658-6600.

WARNING:

Failure to properly vent the oven can be hazardous to the health of the operator and may result in operational problems, unsatisfactory baking and possible damage to the equipment.

Damage sustained as a direct result of improper ventilation will not be covered by the manufacturer’s warranty.

CANOPY TYPE EXHAUST HOOD

A mechanically driven, canopy type exhaust hood is the preferred method of ventilation.

The hood should be sized to completely cover the equipment plus an overhang of at least 6” (15 cm) on all sides not adjacent to a wall. The distance from the floor to the lower edge of the hood should not exceed 7’ (2.1m).

The total makeup and exhaust air requirements for hood capacity should be approximately 30 CFM (.85 m3) for each oven section.

Installing the canopy hood draft diverter

Ovens ordered for hood venting are supplied with a draft diverter. Install the draft diverter as follows:

1. Place the diverter over the flue connector with the open area facing the front of the oven.
2. Secure both ends with the sheet metal screws provided.

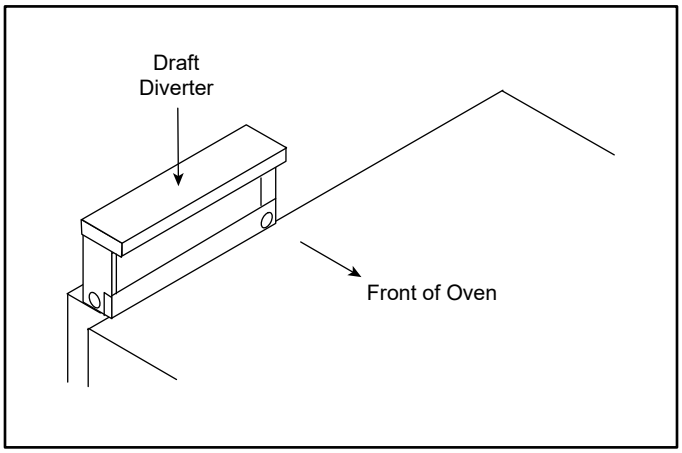

Figure 7

Ventilation

DIRECT FLUE ARRANGEMENT

When the installation of a mechanically driven exhaust hood is impractical the oven may be vented by a direct flue arrangement.

WARNING!!

It is essential that the direct flue be installed as follows. Incorrect installation will result in unsatisfactory baking and oven damage.

The flue must be class B or better. The height of the flue should rise 6-8 ft (2-2.5 m) above the roof of the building or any proximate structure. Never direct vent the oven into a hood. The flue should be capped with a UL Listed type vent cap to isolate the unit from external environmental conditions.

The direct vent cannot replace air consumed and vented by the oven. Provisions must be made to supply the room with sufficient make-up air. Total make-up air requirements for each oven section should be approximately 30 CFM (.85 m3) per section. To increase the supply air entering the room, a ventilation expert should be consulted.

FLUE DIAMETER		
Oven	**Single**	**Double**
DFG-100-K12	6” (15cm)	6” (15cm)
DFG-200-K12	6” (15cm)	8” (20cm)

Installing the draft hood

Ovens ordered for direct venting are supplied with a draft hood. Install the draft hood as follows:

1. Place the draft hood over the flue connector.
2. Secure both ends with the sheet metal screws provided.

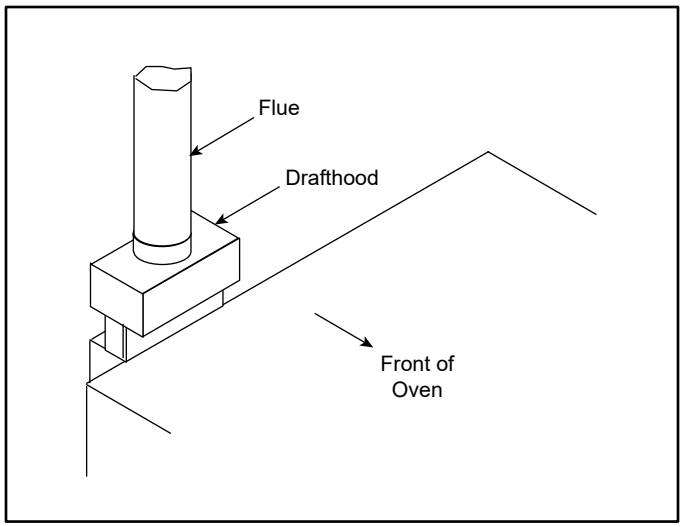

Figure 8

Utility Connections - Standards and Codes

THE INSTALLATION INSTRUCTIONS CONTAINED HEREIN ARE FOR THE USE OF QUALIFIED INSTALLATION AND SERVICE PERSONNEL ONLY. INSTALLATION OR SERVICE BY OTHER THAN QUALIFIED PERSONNEL MAY RESULT IN DAMAGE TO THE OVEN AND/OR INJURY TO THE OPERATOR.

Qualified installation personnel are individuals, a firm, a corporation, or a company which either in person or through a representative are engaged in, and responsible for:

- the installation or replacement of gas piping and the connection, installation, repair or servicing of equipment.
- the installation of electrical wiring from the electric meter, main control box or service outlet to the electric appliance.

Qualified installation personnel must be experienced in such work, familiar with all precautions required, and have complied with all requirements of state or local authorities having jurisdiction.

U.S. and Canadian installations

Installation must conform with local codes, or in the absence of local codes, with the National Fuel Gas Code, NFPA54/ANSI Z223.1-Latest Edition, the Natural Gas Installation Code CAN/CGA-B149.1 or the Propane Installation Code, CAN/CGA-B149.2 as applicable.

Installation must conform with local codes, or in the absence of local codes, with the National Electrical Code, ANSI/NFPA 70-Latest Edition and/or Canadian National Electric Code C22.2 as applicable.

General export installations

Instllation must conform with Local and National installation standards. Local installation codes and/or requirements may vary. If you have any questions regarding the proper installation and/or operation of your Blodgett oven, please contact your local distributor. If you do not have a local distributor, please call the Blodgett Oven Company at 0011-802-658-6600.

Gas Connection

GAS PIPING

A properly sized gas supply system is essential for maximum oven performance. Piping should be sized to provide a supply of gas sufficient to meet the maximum demand of all appliances on the line without loss of pressure at the equipment.

Example:

NOTE: BTU values in the following example are for natural gas.

You purchase a DFG-100-K12 to add to your existing cook line.

1. Add the BTU rating of your current appliances.

Pitco Fryer	120,000 BTU
6 Burner Range	60,000 BTU
Deck Oven	50,000 BTU
Total	230,000 BTU

2. Add the BTU rating of the new oven to the total.

Previous Total	230,000 BTU
DFG-100-K12	55,000 BTU
New Total	285,000 BTU

3. Measure the distance from the gas meter to the cook line. This is the pipe length. Let's say the pipe length is 40' (12.2 m) and the pipe size is 1" (2.54 cm).
4. Use the appropriate table to determine the total capacity of your current gas piping.

The total capacity for this example is 320,000 BTU. Since the total required gas pressure, 285,000 BTU is less than 320,000 BTU, the current gas piping will not have to be increased.

NOTE: The BTU capacities given in the tables are for straight pipe lengths only. Any elbows or other fittings will decrease pipe capacities. Contact your local gas supplier if you have any questions.

Maximum Capacity of Iron Pipe in Cubic Feet of Natural Gas Per Hour

(Pressure drop of 0.5 Inch W.C.)

PIPE LENGTH (FT)	NOMINAL SIZE, INCHES				
	3/4"	1"	1-1/4"	1-1/2"	2"
10	360	680	1400	2100	3950
20	250	465	950	1460	2750
30	200	375	770	1180	2200
40	170	320	660	990	1900
50	151	285	580	900	1680
60	138	260	530	810	1520
70	125	240	490	750	1400
80	118	220	460	690	1300
90	110	205	430	650	1220
100	103	195	400	620	1150
From the National Fuel Gas Code Part 10 Table 10-2					

Maximum Capacity of Pipe in Thousands of BTU/hr of Undiluted L.P. Gas at 11" W.C.

(Pressure drop of 0.5 Inch W.C.)

PIPE LENGTH (FT)	OUTSIDE DIAMETER, INCHES		
	3/4"	1"	1-1/2"
10	608	1146	3525
20	418	788	2423
30	336	632	1946
40	287	541	1665
50	255	480	1476
60	231	435	1337
70	215	404	1241
80	198	372	1144
90	187	351	1079
100	175	330	1014
From the National Fuel Gas Code Part 10 Table 10-15			

Gas Connection

PRESSURE REGULATION AND TESTING

DFG-100-K12-3 ovens are rated at 55,000 BTU/Hr. (16.2 kW) (58 MJ) per section. DFG-200-K12-L ovens are rated at 60,000 BTU/Hr. (17.6 kW) (63 MJ) per section. Each oven has been adjusted at the factory to operate with the type of gas specified on the rating plate.

INLET PRESSURE				
	Natural		**Propane**	
	Min	Max	Min	Max
W.C.	7.0	10.5	11.0	13.0
kPa	1.742	2.61	2.74	3.23
MANIFOLD PRESSURE				
	Natural		**Propane**	
W.C.	3.5		10.0	
kPa	.87		2.49	

- Inlet Pressure - the pressure of the gas before it reaches the oven.
- Manifold Pressure - the pressure of the gas as it enters the main burner(s).
- Min - the minimum pressure recommended to operate the oven.
- Max - the maximum pressure at which the manufacturer warrants the oven's operation.

Each oven is supplied with a regulator to maintain the proper gas pressure. The regulator is essential to the proper operation of the oven and should not be removed. It is preset to provide the oven with 3.5" W.C. (0.87 kPa) for natural gas and 10.0" W.C. (2.50 kPa) for Propane at the manifold.

DO NOT INSTALL AN ADDITIONAL REGULATOR WHERE THE OVEN CONNECTS TO THE GAS SUPPLY UNLESS THE INLET PRESSURE IS ABOVE MAXIMUM.

Prior to connecting the oven, gas lines should be thoroughly purged of all metal filings, shavings, pipe dope, and other debris. After connection, the oven should be checked for correct gas pressure.

The oven and its individual shutoff valve must be disconnected from the gas supply piping system during any pressure testing of that system at test pressures in excess of 1/2 psig (13.85" W.C., 3.45 kPa).

The oven must be isolated from the gas supply piping system by closing its individual manual shutoff valve during any pressure testing of the gas piping system at test pressures equal or less than 1/2 psig (13.85" W.C., 3.45 kPa).

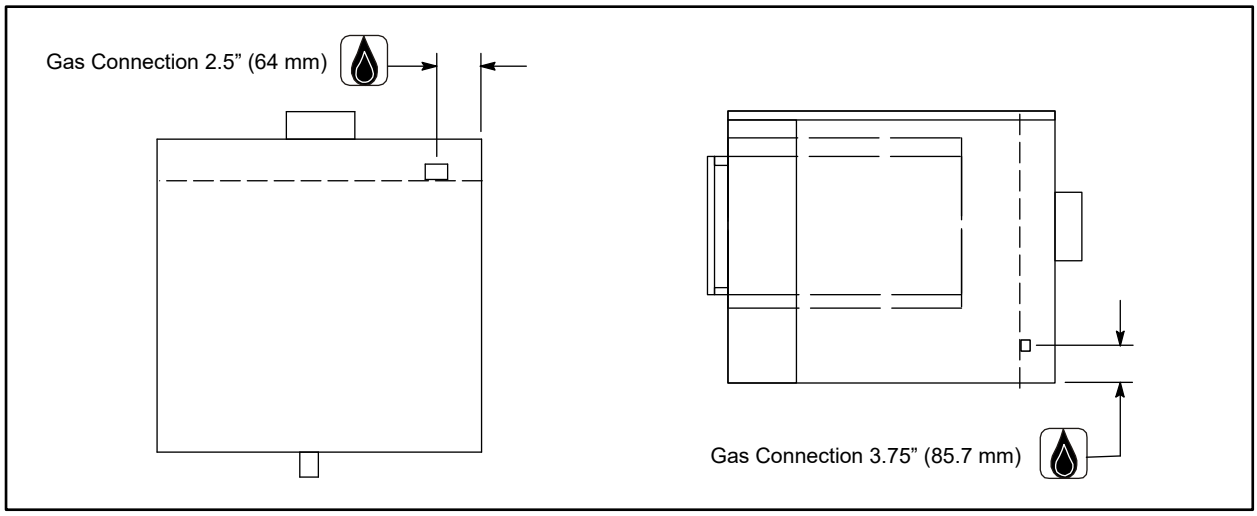

Figure 9

Gas Connection

GAS HOSE RESTRAINT

If the oven is mounted on casters, a commercial flexible connector with a minimum of 3/4” (1.9 cm) inside diameter must be used along with a quick connect device.

The restraint, supplied with the oven, must be used to limit the movement of the unit so that no strain is placed upon the flexible connector. With the restraint fully stretched the connector should be easy to install and quick connect.

The restraint (ie: heavy gauge cable) should be 1,000 lb. (453 kg) test load and should be attached without damaging the building. DO NOT use the gas piping or electrical conduit for the attachment of the permanent end of the restraint! Use anchor bolts in concrete or cement block. On wooden walls, drive hi test wood lag screws into the studs of the wall.

1. Mount the supplied bracket to the leg bolt just below the gas inlet.
2. Attach the clip on restraining cable to the mounting bracket.

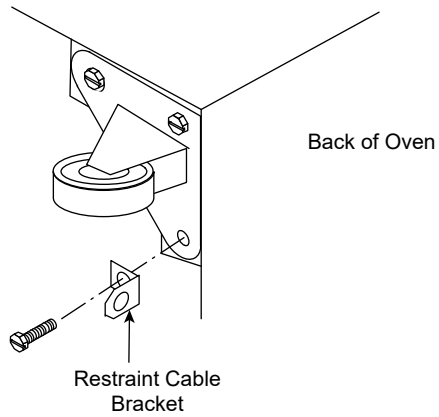

Double stacked unit shown. Use the same procedure for single units.

Figure 10

WARNING!!

If the restraint is disconnected for any reason it must be reconnected when the oven is returned to its original position.

U.S. and Canadian installations

The connector must comply with the Standard for Connectors for Movable Gas Appliances, ANSI Z21.69 or Connectors For Moveable Gas Appliances CAN/CGA-6.16 and a quick disconnect device that complies with the Standard for Quick-Disconnect Devices for Use With Gas Fuel, ANSI Z21.41 or Quick Disconnect For Use With Gas Fuel CAN 1-6.9. Adequate means must be provided to limit the movement of the appliance without depending on the connection and the quick disconnect device or its associated piping.

General export installations

The restraint and quick connect must conform with Local and National installation standards. Local installation codes and/or requirements may vary. If you have any questions regarding the proper installation and/or operation of your Blodgett oven, please contact your local distributor. If you do not have a local distributor, please call the Blodgett Oven Company at 0011-802-658-6600.

Electrical Connection

Wiring diagrams are located in the control compartment and on the back of the oven.

This oven is supplied for connection to 115 volt grounded circuits. The electric motor, indicator lights and related switches are connected through the 6' electric supply cord found at the rear of the oven.

WARNING!!

This appliance is equipped with three prong grounding type plug for your protection against shock hazard and should be plugged directly into a properly grounded three prong receptacle. DO NOT cut or remove the grounding prong from this plug.

The Blodgett Oven Company cannot assume responsibility for loss or damage suffered as a result oF improper installATION.

ELECTRICAL SPECIFICATIONS					
Model	**Hz**	**Volts**	**Phase**	**Amps**	**Electrical Connection (minimum size)**
U.S. and Canadian Installations					
DFG-100-K12-3	60	115	1	6	Cord set provided
DFG-200-K12-L	60	115	1	6	Cord set provided
General Export Installations					
DFG-100-K12-3	50	220-240	1	3	Size per local code
DFG-200-K12-L	50	220-240	1	3	Size per local code

Initial Startup

The following is a check-list to be completed by **qualified technician** prior to turning on the appliance for the first time.

1. Open the manual shut-off valve at the rear of the oven.
2. Remove the control panel and combustion covers.
3. Verify the combination valve's manual shut-off is in the on position.
4. Turn the selector switch to Cook, and the thermostat to 50°F (260°C).

The oven main burner lights, and the Oven Ready Light comes on. With the main burner on, check the following.

1. Verify there are no gas leaks, by checking all gas connections with a soapy water solution.
2. Verify that the inlet pressure is correct. The inlet pressure can be checked at the pressure tap located on the combination valve's inlet side.
3. Verify that the manifold pressure is correct. The manifold pressure can be checked at the pressure tap located on the manifold.
4. If the above pressure readings are set to the recommended pressure requirements, allow the oven to burn-off for 2 hours. If the pressure readings are not set correctly, turn off the oven and readjust accordingly.

WARNING

The break in procedure burns off excess oils present in the metals during fabrication. Smoke may be produced. Proper ventilation is required.

Adjustments associated with initial installation

Each oven, and its component parts, have been thoroughly tested and inspected prior to shipment. However, it is often necessary to further test or adjust the oven as part of a normal and proper installation. These adjustments are the responsibility of the installer, or dealer. Since these adjustments are not considered defects in material or workmanship, they are not covered by the Original Equipment Warranty. They include, but are not limited to:

- calibration of the thermostat
- adjustment of the doors
- burner adjustments
- leveling
- testing of gas pressure
- tightening of fasteners.

No installation should be considered complete without proper inspection, and if necessary, adjustment by qualified installation or service personnel.

Safety Information

The information contained in this section is provided for the use of qualified operating personnel. Qualified operating personnel are those who have carefully read the information contained in this manual, are familiar with the functions of the oven and/or have had previous experience with the operation of the equipment described. Adherence to the procedures recommended herein will assure the achievement of optimum performance and long, trouble-free service.

Please take the time to read the following safety and operating instructions. They are the key to the successful operation of your Blodgett oven.

SAFETY TIPS

For your safety read before operating

What to do if you smell gas:

- DO NOT try to light any appliance.
- DO NOT touch any electrical switches.
- Use an exterior phone to call your gas supplier immediately.
- If you cannot reach your gas supplier, call the fire department.

What to do in the event of a power failure:

- Turn all switches to off.
- DO NOT attempt to operate the oven until the power is restored.

NOTE: In the event of a shut-down of any kind, allow a five (5) minute shut off period before attempting to restart the oven.

General safety tips:

- DO NOT use tools to turn off the gas control. If the gas cannot be turned off manually do not try to repair it. Call a qualified service technician.
- If the oven needs to be moved for any reason, the gas must be turned off and disconnected from the unit before removing the restraint cable. Reconnect the restraint after the oven has been returned to its original location.
- DO NOT remove the control panel cover unless the oven is unplugged.

Operation

SSI-D Solid State Infinite Control with Digital Timer

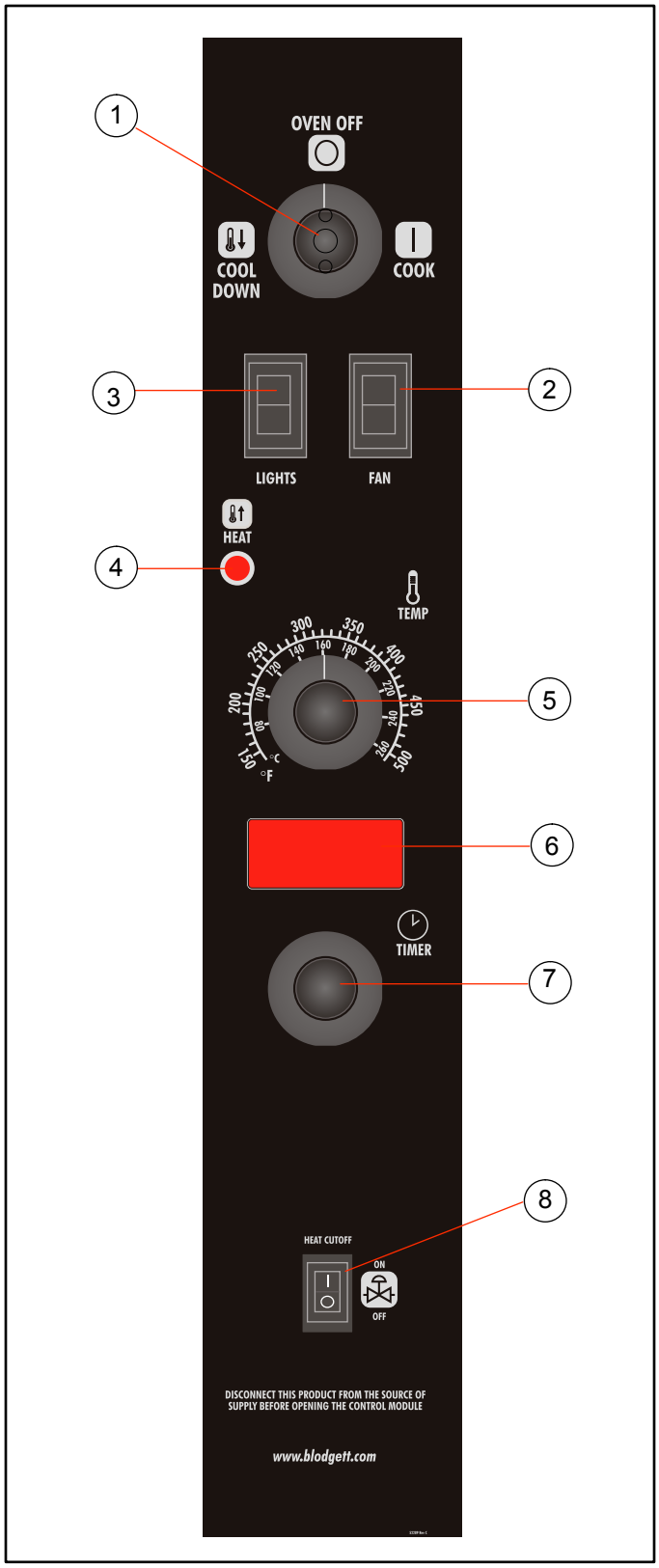

Figure 11

CONTROL DESCRIPTION

1. SELECTOR SWITCH - controls power to the oven for cook or cool down.
2. BLOWER SWITCH - controls blower speed, either hi or lo.
3. LIGHTS SWITCH - controls interior lights.
4. OVEN READY LIGHT - when lit indicates burner operation. When the light goes out the oven has reached operating temperature.
5. SOLID STATE THERMOSTAT - allows an infinite selection of temperatures from 150-500°F (66-260°C).
6. DISPLAY - displays cook time
7. TIMER DIAL - used to enter desired cook time
8. HEAT CUTOFF - used to turn gas on or off.

OPERATION

1. Turn the SELECTOR Switch (1) to COOK. The blower and control compartment cooling fan operate and are controlled automatically by the action of the doors. The display reads 00:00.
2. Set BLOWER Switch (2) to the desired speed.
3. Set the SOLID STATE THERMOSTAT (5) to the desired temperature.
4. Preheat until the OVEN READY LIGHT (4) goes out.
5. Load product into the oven. Rotate the dial (7) to the desired time. The timer will begin to countdown after approximately 1 second.
6. When the buzzer sounds, remove the product from the oven. Turn the TIMER dial (7) to silence the buzzer.
7. Turn the SELECTOR Switch (1) to OVEN OFF.

WARNING!!

A complete five minute shutdown must be observed before the oven is relighted.

SSI-M Solid State Infinite Control with Manual Timer

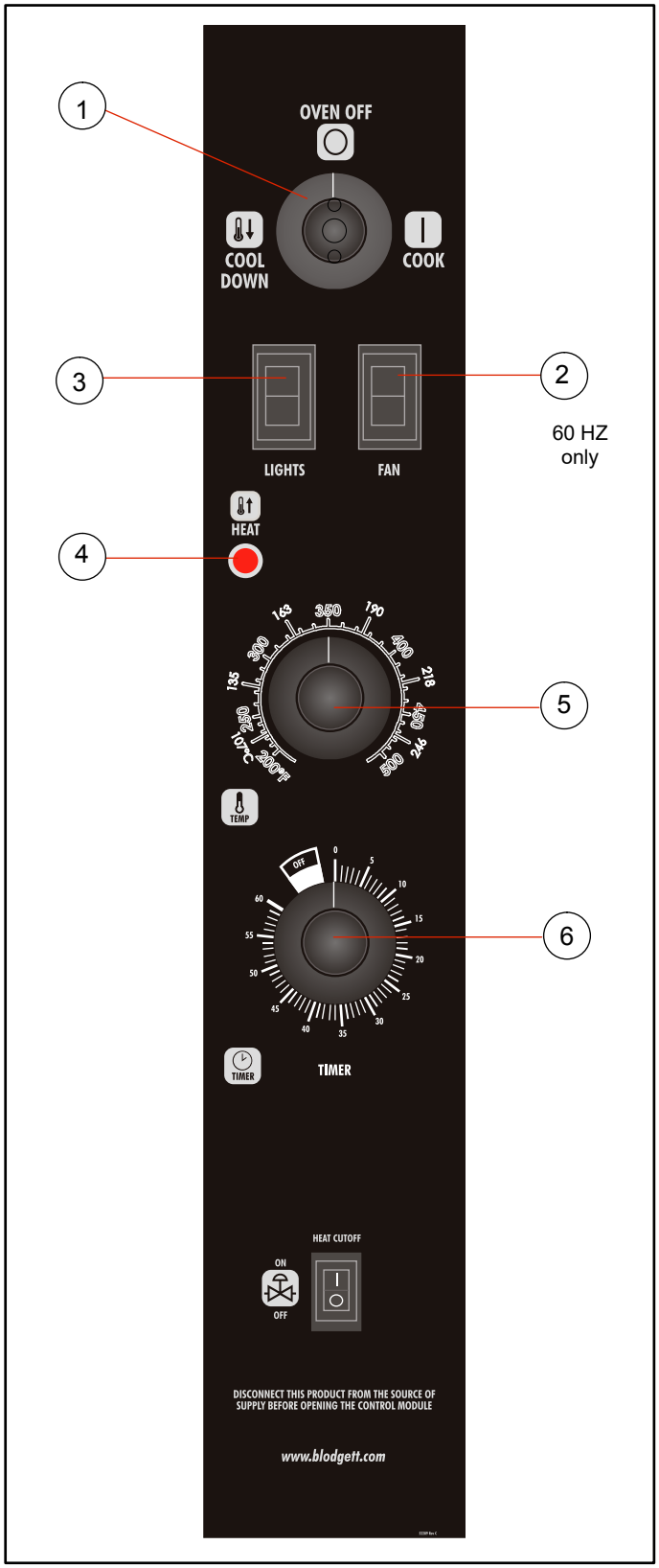

Figure 12

CONTROL DESCRIPTION

1. SELECTOR SWITCH - controls power to the oven for cook or cool down.
2. BLOWER SWITCH - controls blower speed, either hi or lo. Two speed not available in 50 Hz.
3. LIGHTS SWITCH - controls interior lights.
4. OVEN READY LIGHT - when lit indicates burner operation. When the light goes out the oven has reached operating temperature.
5. SOLID STATE THERMOSTAT - allows either 8 preset temperatures to be selected in accordance with customer requirements, or an infinite selection of temperatures from 200-500°F (95-260°C). (infinite control shown)
6. TIMER - activates an electric buzzer that sounds when the cook time expires.

OPERATION

1. Turn the SELECTOR Switch (1) to COOK. The blower and control compartment cooling fan operate and are controlled automatically by the action of the doors.
2. Set BLOWER Switch (2) to the desired speed.
3. Set the SOLID STATE THERMOSTAT (5) to the desired setting or temperature.
4. Preheat until the OVEN READY LIGHT (4) goes out.
5. Load product into the oven. Determine cook time and set the TIMER (6).
6. When the buzzer sounds, remove the product from the oven. Turn the TIMER knob (6) to OFF to silence the buzzer.
7. Turn the SELECTOR Switch (1) to OVEN OFF.

WARNING!!

A complete five minute shutdown must be observed before the oven is relighted.

Operation

General Guidelines for Operating Personnel

COOK TIMES AND TEMPERATURES

Preheating the oven

Always preheat the oven before baking or roasting. We recommend preheating 50°F (28°C) above the cook temperature to offset the drop in temperature when the doors are opened and cold product is loaded into the oven. Set the thermostat to the cook temperature after the product is loaded.

NOTE: For frozen product, preheat the oven 100°F (56°C) above the cook temperature.

Cook Temperatures

Generally, cook temperatures should be 50°F (28°C) lower than deck or range oven recipes. If the edges of the product are done but the center is raw, or if there is color variation, reduce the thermostat setting another 15-25°F (10-15°C). Continue to reduce the cook temperature on successive loads until the desired results are achieved.

NOTE: Cooking at excessive temperatures will not reduce cook time, it will produce unsatisfactory baking and roasting results.

Cook Time

Check the product in about half the time recommended for deck or range oven recipes. Record times and temperatures which provide best results for future reference.

NOTE: Cook time will vary with the amount of product loaded, the type of pan and the temperature.

OPERATING TIPS

Pans and Racks

Product or pan height determines how many racks are used. The oven holds up to ten 18” x 26” (45.7 x 66.0 cm) bun pans.

Load the oven from the bottom, centering the pans on the rack. Never place a pan or aluminum foil on the bottom of the oven. This obstructs the flow of air and results in uneven baking and roasting.

Roasting

To reduce shrinkage when roasting, place meat directly on the racks. Place a sheet pan one-half full of water in the bottom rack position. The water evaporates, increasing humidity in the oven chamber. The pan catches grease from the meat, making oven cleaning easier.

Baking

Weigh the product to ensure equal distribution in each pan. Varying amounts of product will cause uneven baking results.

Fans

The fan must be operating for the oven to heat. Use the Pulse Plus feature to allow light or liquid product to set in the pan and to avoid rippling towards the fan. If your oven is not equipped with this feature use the following procedure.

1. Preheat the oven 25°F (15°C) above the baking temperature.
2. Load the oven with product. Close the doors.
3. Set the thermostat to the baking temperature.
4. Turn the oven off.
5. Allow the product to set for 5-7 minutes with the fan off. The residual heat in the oven sets the product.
6. Turn the oven on for the remainder of the bake.

Lights

Turn the oven lights off when not viewing the product. Leaving the lights on for extended periods of time shortens the bulb life considerably.

Suggested Times and Temperatures

PRODUCT	TEMPERATURE	TIME	# SHELVES
Meats			
Hamburger Patties (5 per lb)	400°F (205°C)	8-10 mins.	10
Steamship Round (80 lb. quartered)	275°F (135°C)	2 hrs 45 mins.	2
Standing Rib Choice (20 lbs, trimmed, rare)	235°F (115°C)	2 hrs 45 mins.	2
Banquet Shell Steaks (10 oz. meat)	450°F (235°C)	7-8 mins.	5
Swiss Steak after Braising	275°F (135°C)	1 hr.	5
Baked Stuffed Pork Chop	375°F (190°C)	25-30 mins.	5
Boned Veal Roast (15 lbs.)	300°F (150°C)	3 hrs. 10 mins.	2
Lamb Chops (small loin)	400°F (205°C)	7-8 mins.	5
Bacon (on racks in 18” x 26” pans)	400°F (205°C)	5-7 mins.	10
Poultry			
Chicken Breast & Thigh	350°F (175°C)	40 mins.	5
Chicken Back & Wing	350°F (175°C)	35 mins.	5
Chicken (21/2 lbs. quartered)	350°F (175°C)	30 mins.	5
Turkey Rolled (18 lb. rolls)	310°F (155°C)	3 hrs 45 mins.	3
Fish and Seafood			
Halibut Steaks, Cod Fish (frozen 5 oz)	350°F (175°C)	20 mins.	5
Baked Stuffed Lobster (21/2 lb.)	400°F (205°C)	10 mins.	3
Lobster Tails (frozen)	425°F (220°C)	9 mins.	5
Cheese			
Macaroni & Cheese Casserole	350°F (175°C)	30 mins.	5
Melted Cheese Sandwiches	400°F (205°C)	8 mins.	10
Potatoes			
Idaho Potatoes (120 ct.)	400°F (205°C)	50 mins.	5
Oven Roasted Potatoes (sliced or diced)	325°F (165°C)	10 mins.	5
Baked Goods			
Frozen Berry Pies (22 oz)	325°F (150°C)	35 mins.	5 (30 pies)
Fresh Apple Pie (20 oz.)	350°F (175°C)	25-30 mins.	5 (30 pies)
Pumpkin Pies (32 oz.)	300°F (150°C)	30-50 mins.	5 (20 pies)
Fruit Crisp	300°F (150°C)	25 mins.	5
Bread (24 - 1 lb. loaves)	325°F (155°C)	30 mins.	3
Southern Corn Bread	375°F (190°C)	15-20 mins.	5
Baking Soda Biscuits	400°F (205°C)	6 mins.	5
Brown & Serve Rolls	350°F (175°C)	15 mins.	5
Sheet Cakes (5 lb. mixed batter per pan)	325°F (160°C)	16-18 mins.	5
Chocolate Cake	325°F (160°C)	20 mins.	5
Brownies	325°F (150°C)	15 mins.	5

NOTE: Actual times and temperatures may vary considerably from those shown above. They are affected by weight of load, temperature of the product, recipe, type of pan and calibration of thermostat. Should your recipe vary, write in your proven time and temperature for ready reference.

Maintenance

Cleaning and Preventative Maintenance

CLEANING THE OVEN

WARNING!!

Always clean the unit when it is cold.

WARNING!!

Be sure to read and follow the MSDS or safety instructions on the bottle for your oven cleaner.

Cleaning the Exterior

1. Saturate a cloth with stainless steel cleaner and wipe down the exterior.

   NOTE: Heat tint and heavy discoloration may be removed with any non-caustic commercial oven cleaner.

2. Dry the oven with a clean cloth.

Cleaning the Oven Interior

1. Remove the racks, rack supports and blower wheel cover (back panel) from the oven. Soak the parts in a solution of ammonia and water.

   NOTE: To remove the blower wheel cover loosen the screws in each corner. Then lift up and out.

2. The porcelain interior can be cleaned with any commercial oven cleaner. Be sure caustic cleaning compounds DO NOT come in contact with the temperature probe, heating element, and blower wheel. Let the cleaner sit for 10-20 minutes or the length of time recommended on your cleaner.

3. Wipe out the cleaner with a wet cloth.

4. Reinstall the racks, rack supports and blower wheel cover.

Weekly Cleaning

Be sure the air intake (cooling fan) behind the oven is free of all lint, grease or other air flow inhibitors. Keeping the air intake free of obstructions will extend the life of the oven components.

PREVENTATIVE MAINTENANCE

The best preventative maintenance measures are, the proper installation of the equipment and a program for routinely cleaning the ovens.

Annual Maintenance

This oven requires no lubrication, however, the venting system should be checked annually for possible deterioration resulting from moisture and corrosive flue products.

If maintenance or repairs are required, contact your local Blodgett service company, a factory representative or the Blodgett Oven company.

WARNING!!

Always disconnect the appliance from the power supply before servicing or cleaning.

Troubleshooting Guide

POSSIBLE CAUSE(S)	SUGGESTED REMEDY
SYMPTOM: Oven will not fire.	
• Gas turned off.	• Turn the gas valve to ON.
• Oven not plugged in.	• Plug in electrical supply cord.
• Power switch on the control panel is off.	• Set the control panel to COOK or OVEN ON.
• Control set below ambient temperature.	• Set to desired cook temperature.
• Doors are open.	• Close doors.
• Computerized controls - error code on display.	• *
SYMPTOM: Oven does not come to ready.	
• The oven has not reached preheat temperature.	• Wait for oven to reach preheat temperature.
• Gas valve not turned on completely.	• Check the gas valve, turn on fully if necessary.
• The quick disconnect is not connected.	• Reconnect the quick connect. Check all gas connections.
• Gas pressure to oven is too low.	• Call your local gas representative.
• Fan delay feature may be activated, if applicable.	• Deactivate fan delay feature.
• Internal problem with main temperature control.	• *
SYMPTOM: Convection fan does not run.	
• Oven is not plugged in.	• Plug in electrical supply cord.
• Oven is not set to the cook mode.	• Set the control panel to COOK or OVEN ON.
• Circuit breaker tripped.	• Reset the breaker.
• Fan delay feature may be activated, if applicable.	• Deactivate fan delay feature.
• Doors are open	• Close doors.
SYMPTOM: General baking problems.	
• Computerized controls - incorrect product programming.	• Reprogram control per Operation section.
• Thermostat out of calibration.	• *
• Improper oven venting.	• *

**Denotes remedy is a difficult operation and should be performed by qualified personnel only. It is recommended, however, that All repairs and/or adjustments be done by your local Blodgett service agency and not by the owner/operator. Blodgett cannot assume responsibility for damage as a result of servicing done by unqualified personnel.*

WARNING!!

Always disconnect the power supply before cleaning or servicing the oven.

Commercial Kitchen Equipment Parts

Find more Blodgett equipment resources at

parthubz.com/equipment/blodgett

Need parts or service?

Call 833-700-8006

support@parthubz.com

parthubz.com