Commercial Kitchen Equipment Parts

BUNN TB3Q

Bunn TB3Q Parts Diagram

Provided by PartHubz

parthubz.com

833-700-8006 | support@parthubz.com

BUNN®

TB3 Series

Including: TB3; TB3-LP; TB3Q; TB3Q-LP

STARTING WITH SERIAL NUMBER: TU000200000

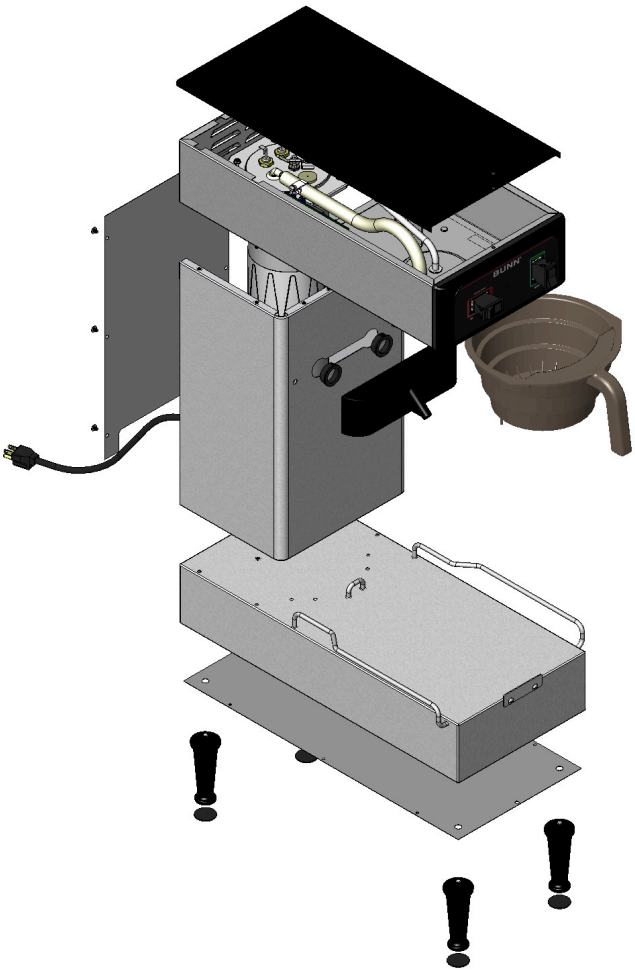

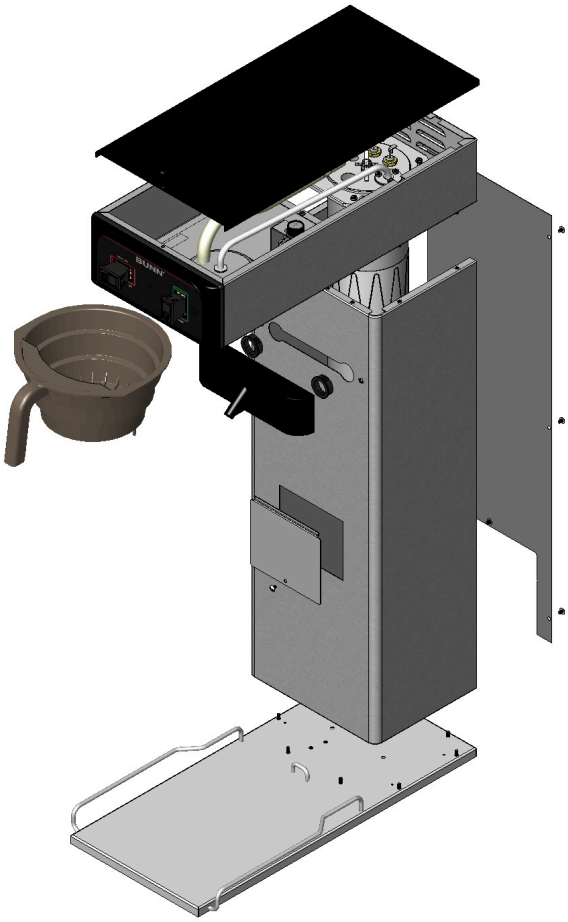

ILLUSTRATED PARTS CATALOG

Designs, materials, weights, specifications, and dimensions for equipment or replacement parts are subject to change without notice.

BUNN-O-MATIC CORPORATION

POST OFFICE BOX 3227
SPRINGFIELD, ILLINOIS 62708-3227
PHONE: (217) 529-6601 FAX: (217) 529-6644

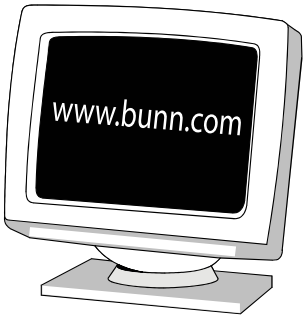

41328.0000A 09/08 ©2008 Bunn-O-Matic Corporation

BUNN-O-MATIC COMMERCIAL PRODUCT WARRANTY

Bunn-O-Matic Corp. ("BUNN") warrants equipment manufactured by it as follows:

1) All equipment other than as specified below: 2 years parts and 1 year labor.

2) Electronic circuit and/or control boards: parts and labor for 3 years.

3) Compressors on refrigeration equipment: 5 years parts and 1 year labor.

4) Grinding burrs on coffee grinding equipment to grind coffee to meet original factory screen sieve analysis: parts and labor for 3 years or 30,000 pounds of coffee, whichever comes first.

These warranty periods run from the date of installation BUNN warrants that the equipment manufactured by it will be commercially free of defects in material and workmanship existing at the time of manufacture and appearing within the applicable warranty period. This warranty does not apply to any equipment, component or part that was not manufactured by BUNN or that, in BUNN's judgment, has been affected by misuse, neglect, alteration, improper installation or operation, improper maintenance or repair, damage or casualty. This warranty is conditioned on the Buyer 1) giving BUNN prompt notice of any claim to be made under this warranty by telephone at (217) 529-6601 or by writing to Post Office Box 3227, Springfield, Illinois 62708-3227; 2) if requested by BUNN, shipping the defective equipment prepaid to an authorized BUNN service location; and 3) receiving prior authorization from BUNN that the defective equipment is under warranty.

THE FOREGOING WARRANTY IS EXCLUSIVE AND IS IN LIEU OF ANY OTHER WARRANTY, WRITTEN OR ORAL, EXPRESS OR IMPLIED, INCLUDING, BUT NOT LIMITED TO, ANY IMPLIED WARRANTY OF EITHER MERCHANTABILITY OR FITNESS FOR A PARTICULAR PURPOSE. The agents, dealers or employees of BUNN are not authorized to make modifications to this warranty or to make additional warranties that are binding on BUNN. Accordingly, statements by such individuals, whether oral or written, do not constitute warranties and should not be relied upon.

If BUNN determines in its sole discretion that the equipment does not conform to the warranty, BUNN, at its exclusive option while the equipment is under warranty, shall either 1) provide at no charge replacement parts and/or labor (during the applicable parts and labor warranty periods specified above) to repair the defective components, provided that this repair is done by a BUNN Authorized Service Representative; or 2) shall replace the equipment or refund the purchase price for the equipment.

THE BUYER'S REMEDY AGAINST BUNN FOR THE BREACH OF ANY OBLIGATION ARISING OUT OF THE SALE OF THIS EQUIPMENT, WHETHER DERIVED FROM WARRANTY OR OTHERWISE, SHALL BE LIMITED, AT BUNN'S SOLE OPTION AS SPECIFIED HEREIN, TO REPAIR, REPLACEMENT OR REFUND.

In no event shall BUNN be liable for any other damage or loss, including, but not limited to, lost profits, lost sales, loss of use of equipment, claims of Buyer's customers, cost of capital, cost of down time, cost of substitute equipment, facilities or services, or any other special, incidental or consequential damages.

BrewWISE, BrewLOGIC, BrewWIZARD, BUNN Gourmet Ice, BUNN Pour-O-Matic, BUNN, Bunn-OMatic, Bunn-O-Matic, BUNNlink, BUNNserve, BUNN Espress, DBC, Dr. Brew, Dual, EasyClear, EasyGard, Easy Pour, FlavorGard, Gourmet Ice, Gourmet Juice, High Intensity, IMIX, Infusion Series, Legendary for Quality, Quality Beverage Equipment Worldwide, The Mark of Quality in Beverage Equipment Worldwide, My Café, PowerLogic, Safety-Fresh, Scale-Pro, Single, Smart Funnel, Smart Hopper, SmartWAVE, Soft Heat, SplashGard, System III, ThermoFresh, 392, AutoPOD, AXIOM, Beverage Profit Calculator, Beverage Bar Creator, BrewMETER, BUNNSERVE, BUNNsource, Coffee At Its Best, Cool Froth, Digital Brewer Control, Intellisteam, Nothing Brews Like a BUNN, Pouring Profits, Pulse Wave, Signature Series, Silver Series, Smart Heat, Tea At Its Best, The Horizontal Red Line, Titan, Ultra, are either trademarks or registered trademarks of Bunn-O-Matic Corporation.

TABLE OF CONTENTS

Top Cover, Hood, Trunk 4
Bases 6
Tank Assemblies 8
Fill Solenoid & Dilution Lines (TB3/TB3Q) 10
Sweetner Solenoid & Lines (Optional) 12
TB3QA & TB3Q-LP Plumbing 14
TB3A & TB3-LP Plumbing 18
Electrical and Operating Controls 22
Funnel Assemblies 26
Numerical Index 28

TOP COVER, HOOD AND TRUNK

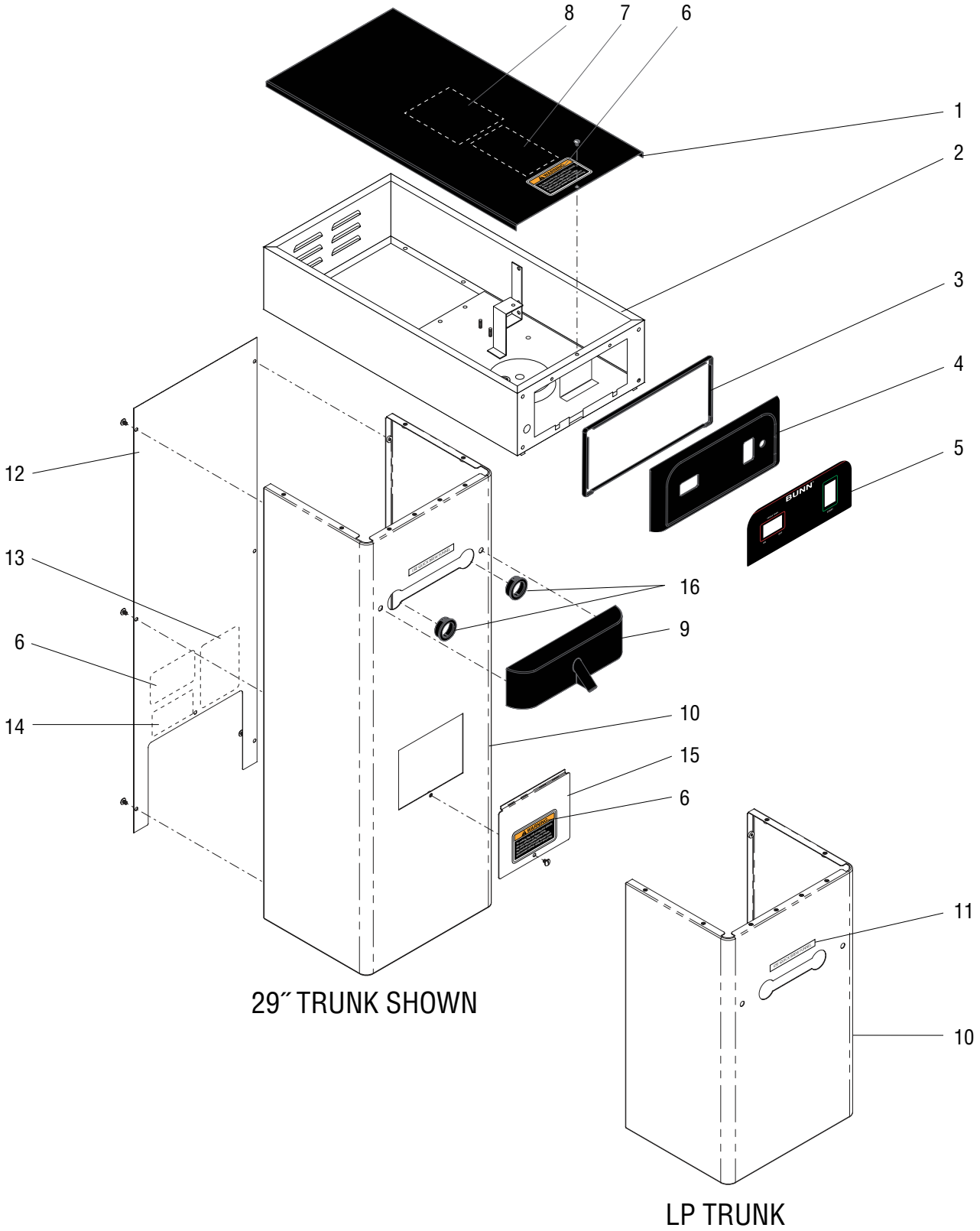

P4015.40

TOP COVER, HOOD AND TRUNK

ITEM	PART NO.	QTY.	DESCRIPTION
1	36355.1002	1	Cover, Top BLK (Includes items 8 & 20)
	01308.0003	1	Screw, Truss Head BLK #6-32 x .25”
2	36584.0001	1	Hood SST
	36584.0003	1	Hood BLK
	02308.0000	8	Screw, Pan Head #8-32 x .38”
3	36586.0000	1	Gasket
4	36580.0001	1	Bezel
	02308.0000	4	Screw, Pan Head #8-32 x .38”
	01502.0000	4	Lockwasher, Split #10
5	36590.0000	1	Decal, Control Panel (Plain, No Lights)
	36590.0002	1	Decal, Control Panel (Models w/"UNSWEET/OFF/SWEET" Switch)
	36590.0002	1	Decal, Control Panel (TB3Q Models w/Red Sweetner Light)
	36590.0017	1	Decal, Control Panel (Models w/Ready Light in Start Switch)
6	37881.0000	2	Decal, No Serviceable Parts
7	37234.0000	1	Electrical Schematic 120V (TB3)
	27432.0000	1	Electrical Schematic 120V (Models w/Sweetener) (TB3)
	37234.0001	1	Electrical Schematic 120V (TB3Q)
	37234.0006	1	Electrical Schematic, 120V (TB3Q w/Low Sweetener Detect)
	37234.0009	1	Electrical Schematic, 120V (TB3Q W/Ready Light built into Start Switch)
8	32540.0000	1	Decal, Batch Set, Digital Timer
9	36360.1001	1	Nozzle, Dilution
	02332.0005	2	Screw, Hex #6 x .38”
10	36353.0012	1	Trunk BLK 29.0”
	36353.0013	1	Trunk SST 29.0”
	36353.0014	1	Trunk SST 25.75”
	36594.0003	1	Trunk SST LP Models (Order # 11)
	02308.0000	6	Screw, Pan Head #8-32 x .38”
11	03537.0000	1	Decal, Use Quick Brew Funnel (TB3Q Only)
12	36356.1010	1	Panel, Back BLK 29.0” (Includes Decals)
	36356.1011	1	Panel, Back SST 29.0” (Includes Decals)
	36356.1013	1	Panel, Back SST 25.75” (Includes Decals)
	36997.1000	1	Panel, Back LP Models Only (Includes Decals)
	01311.0001	6	Screw, Truss Head #8-32 x .25”
13	00831.0000	1	Decal, Warning - Electrical
14	00656.0000	1	Decal, Comply to Plumbing Code
15	34948.1002	1	Plate, Access Cover SST (Includes item 8)
	34948.1003	1	Plate, Access Cover BLK (Includes item 8)
	01311.0001	1	Screw, Truss Head, SST #8-32 x .25”
	01311.0004	1	Screw, Truss Head, BLK #8-32 x .25”
16	01592.0001	2	Snap Bushing

* Indicates the part number listed is for reference only. See DESCRIPTION for possible service replacement.

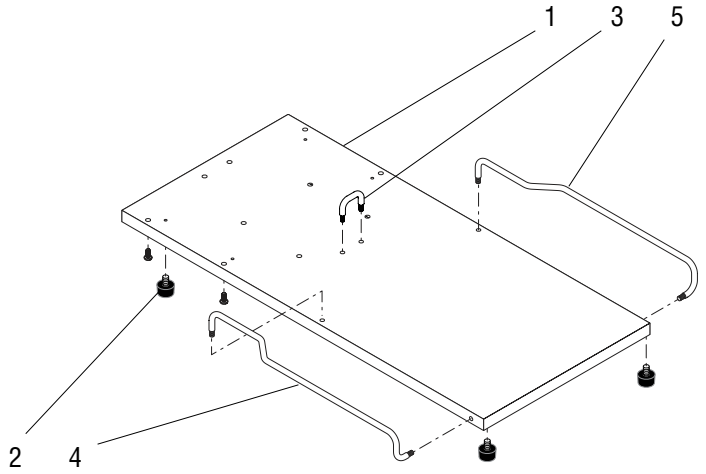

TB3 & TB3Q

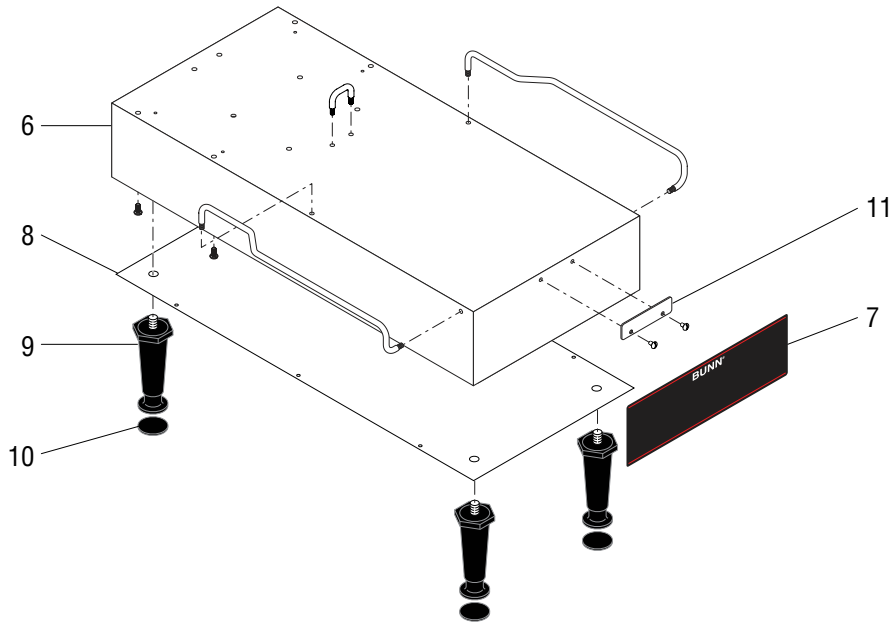

ALL LP MODELS

P4016.40

BASES

ITEM	PART NO.	QTY.	DESCRIPTION
1	36362.0002	1	Base
2	25137.0001	4	Foot
3	36412.0000	1	Rail, Stop
	00970.0000	2	Nut, Keps #8-32
4	36461.0000	1	Guide Rail, Left
	00970.0000	2	Nut, Keps #8-32
5	36462.0000	1	Guide Rail, Right
	00970.0000	2	Nut, Keps #8-32
6	36923.0002	1	Base
7	37573.0000	1	Decal, Decorative
8	36877.0000	1	Panel, Bottom
	02332.0002	8	Screw, Hex #6 x .38”
9	26528.0001	4	Leg, 4.0” Adjustable
10	03996.0000	4	Pad, Non-Skid
11	37538.0000	1	Stop, Dispenser Front
	01308.0002	2	Screw, Truss Head #6-32 x .25”

* Indicates the part number listed is for reference only. See DESCRIPTION for possible service replacement.

TANK ASSEMBLIES

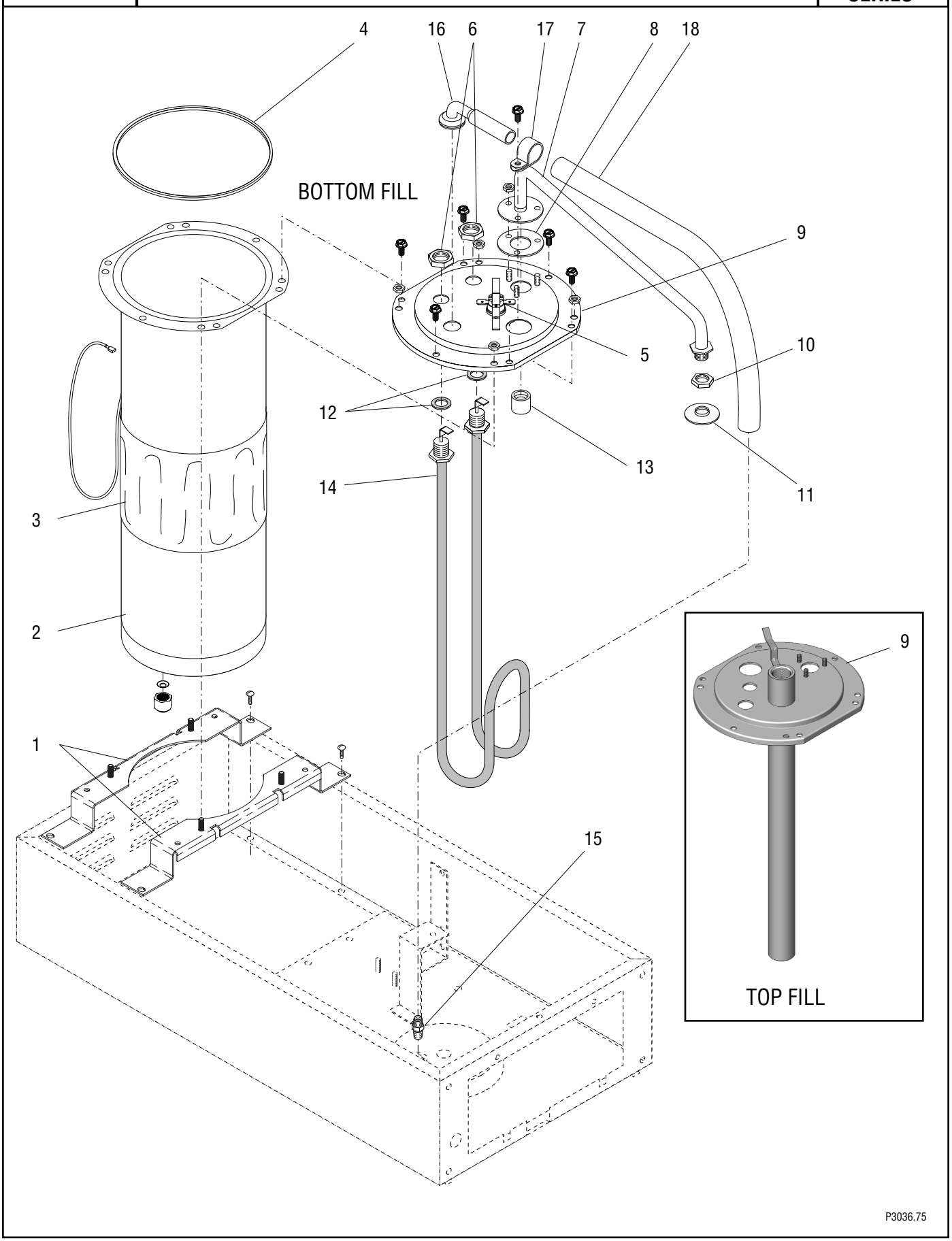

TANK ASSEMBLIES

ITEM	PART NO.	QTY.	DESCRIPTION
1	36582.0001	2	Bracket, Tank Mounting
	02308.0000	4	Screw, Pan Head #8-32 x .375"
2	03068.0000	1	Tank
	00908.0000	4	Nut, Hex #8-32
3	20315.0001	1	Blanket Warmer, 44W (100V & 120V Models)
	03470.0000	1	Blanket Warmer, 55W 230V
4	04844.0000	1	Gasket, Tank Lid
5	29329.1000	1	Thermostat, Limit 15 amp
6	00942.0000	2	Nut, Hex .50"-20
7	36576.0000	1	Sprayhead Tube
	00908.0000	3	Nut, Hex #8-32
8	05515.0000	1	Gasket, Sprayhead Tube
9	03370.1001	1	Kit, Lid Assembly (Includes 4 & 16-18) (For Bottom Fill Models Only)
	03125.0002	1	Kit, Lid Assembly (For Top Fill Models Only)
	02337.0002	6	Screw, Hex Head Thread Forming #10 x .50"
10	01075.0000	1	Nut, Hex .438"-20
11	01082.0000	1	Sprayhead, 6 Hole
	01082.0003	1	Sprayhead, 7 Hole
12	00943.0000	2	Gasket, Tank Heater
13	05518.0000	1	Syphon Hub
14	03070.1000	1	Tank Heater, 1680W 120V (Includes Gaskets)
	03297.1000	1	Tank Heater, 1680W 100V (Includes Gaskets)
	03299.1000	1	Tank Heater, 1680W 230V (Includes Gaskets)
15	00406.0001	1	Fitting, .375" Tube x .125" MPT
16	38969.0001	1	Fitting, 90° Tank Vent, Silicon
17	00620.0000	1	Clamp
18	32591.0025*	1	Tubing, Silicone .50˝ ID x 13˝ (Order # 19)

The following items are not illustrated

19	32591.1002	-	Tubing, Silicone .50˝ ID x 36˝ (Cut to length)	
20	37233.1006	1	Tank Kit 1680W 120V	BOTTOM FILL
	37233.1009	1	Tank Kit 1680W 230V	
21	37233.1007	1	Tank Kit 1680W 120V	TOP FILL
	37233.1008	1	Tank Kit 1680W 230V	

* Indicates the part number listed is for reference only. See DESCRIPTION for possible service replacement.

FILL SOLENOID AND DILUTION LINES

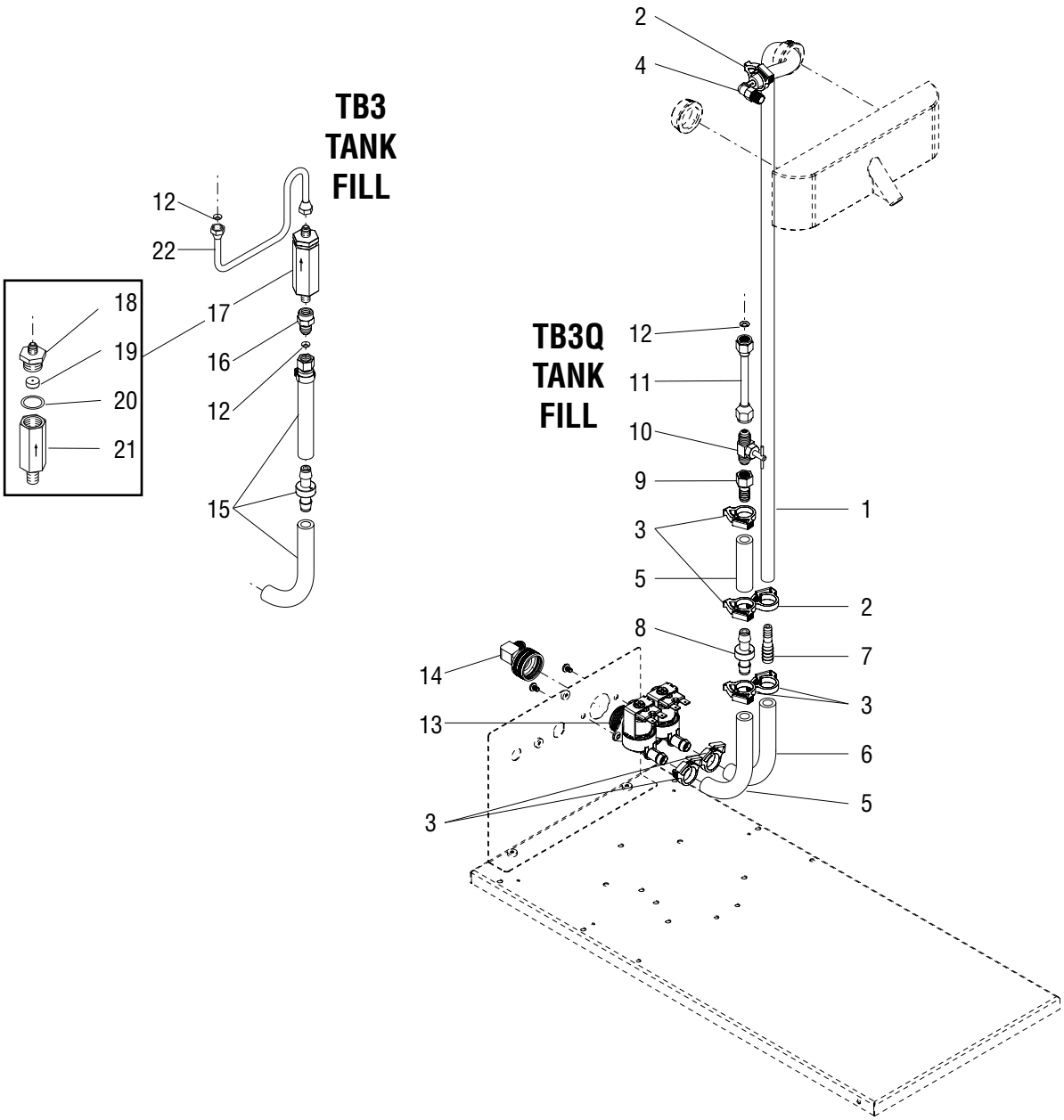

P4017.50

FILL SOLENOID AND DILUTION LINES

ITEM	PART NO.	QTY.	DESCRIPTION
1	11707.0007*	1	Tube, Silicone .250” I.D. x 31.0” LG (Order item 23)(Models with 29.0˝ Trunk)
	11707.0013*	1	Tube, Silicone .250” I.D. x 28.0” LG (Order item 23)(Models with 25.75˝ Trunk)
2	12422.0000	2	Clamp, Hose - SNP 6
3	12422.0001	6	Clamp, Hose - SNP 10
4	40783.0000	1	Elbow, 1/8-27 NPT TO 1/4" BARB
5	20976.0041*	2	Tube, Silicone .375˝ ID x .625˝ OD x 3.75˝ LG, (Order item 24)
6	20976.0046*	1	Tube, Silicone .375˝ ID x .625˝ OD x 5.0˝ LG, (Order item 24)
7	26443.0000	1	Reducer, Hose Barb .38X.25
8	33027.0001	1	Check Valve
9	40187.0001	1	Hose Adapter, .25 X .375 Barb
10	00484.0001	1	Needle Valve
11	40304.0000	1	Tube Assy, Needle Valve to Tank
12	24684.0000	1	Gasket, .25 Flare-Copper
13	40297.1000	1	Solenoid Assembly 120VAC
	32283.0000	2	Screw, SST SLTD PNH M4 X 6MM
14	37297.0000	1	Elbow, .25 Flr X .75 Fthrd
15	41035.1000	1	Tube Assy, Solenoid to Flow control 29.0˝ Trunk TB3 Only (Includes item 8)
	41035.1001	1	Tube Assy, Solenoid to Flow control 25.75˝ Trunk TB3 Only (Includes item 8)
16	00445.0001	1	Connector, FEM-TN.25FLRx.12FPT
17	20528.1195	1	Flow Control Assembly (.195 GPM) (Includes items 31 thru 34)
18	01154.0001	1	Fitting, Flow Control Outlet
19	20526.1195	1	Flow Washer/Gasket Kit (.195 GPM) (Includes item 32)
20	01155.0000	1	Gasket, Flow Control
21	20527.0001*	1	Body, Flow Control (Not Available. Order item 17)
22	00305.0001	1	Tube Assy, Check Valve To Tank (TB3 Only)

The following items are not illustrated

23	11707.1001	-	Tube, Silicone .250” I.D. x .50” O.D. x 36” LG
	11707.1002	-	Tube, Silicone .250” I.D. x .50” O.D. x 120” LG
24	20976.1000	-	Tube, Silicone .375ID x 12.0" LG
	20976.1001	-	Tube, Silicone .375ID x 36.0" LG
	20976.1002	-	Tube, Silicone .375ID x 120.0" LG

* Indicates the part number listed is for reference only. See DESCRIPTION for possible service replacement.

* Indicates the part number listed is for reference only. See DESCRIPTION for possible service replacement.

SWEETNER SOLENOID AND LINES (OPTIONAL)

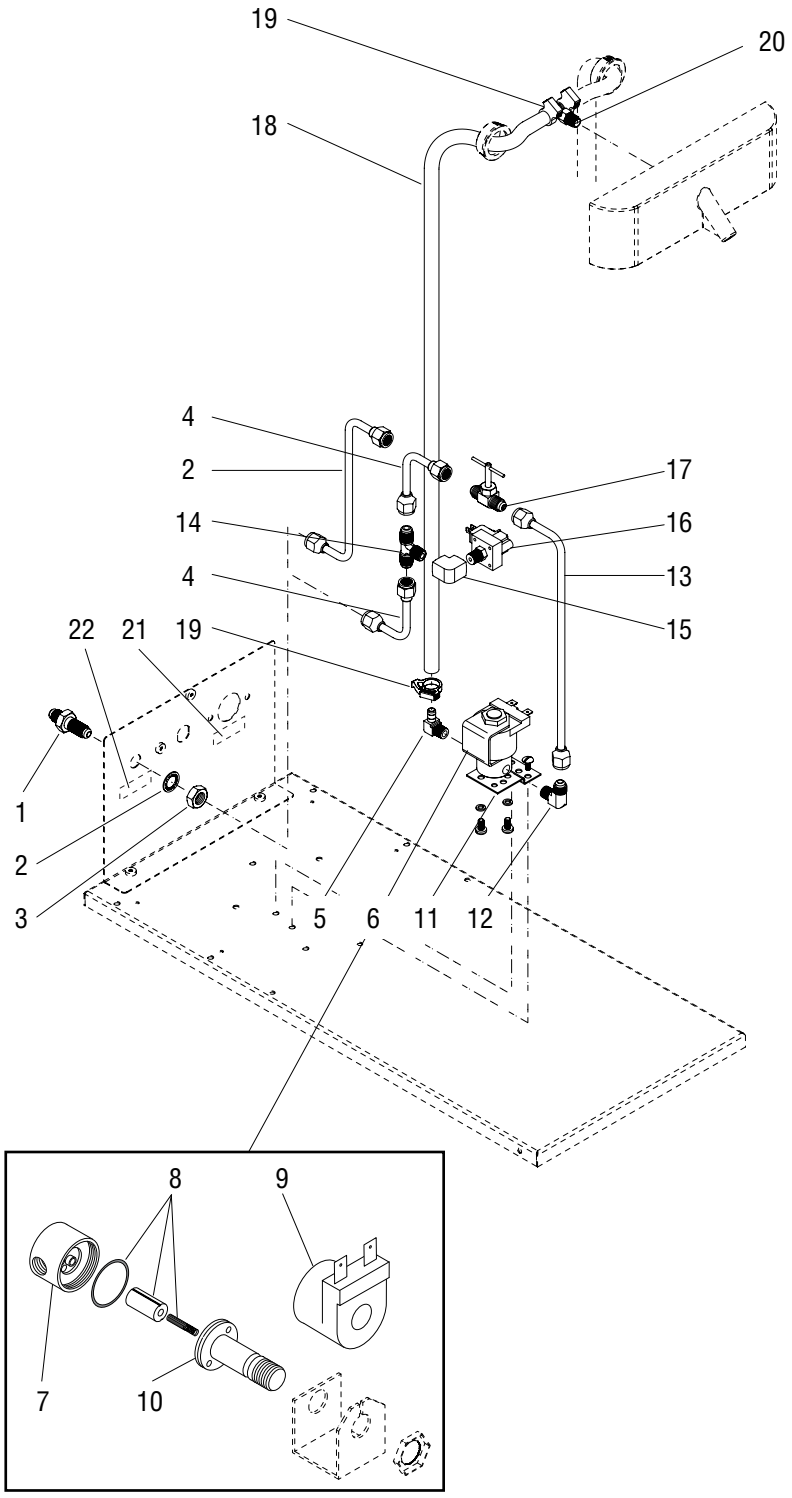

P4018.50

SWEETNER SOLENOID AND LINES (OPTIONAL)

ITEM	PART NO.	QTY.	DESCRIPTION
1	00459.0000	1	Fitting, Bulkhead .250” Flare
2	01532.0000	1	Lockwasher, Internal Tooth .438”
3	00463.0000	1	Nut, Hex - Brass .438”-20
4	00310.0012	2	Tube Assy, .25FLR1.56X2
5	00464.0001	1	Elbow, Male-Tnpl.25 Barbx.
6	01085.0000	2	Solenoid Valve, 120V (Includes items 11 - 14)
	01327.0000	4	Screw, Pan Head #10-32 x .375”
	01502.0000	4	Lockwasher, Split #10
7	01079.0000	1	Solenoid Valve Base
8	01111.0000	1	Solenoid Valve Repair Kit (Includes Plunger, Seal and Spring)
9	01101.0000	1	Solenoid Valve Coil, 120V
10	01116.0000	1	Guide
11	07441.0000	2	Bracket
	01315.0000	4	Screw, Truss Head #8-32 x .38”
12	00400.0001	1	Elbow .25” Flare x .125”MPT
13	40203.0000	1	Tube Assy, Product Empty
14	00431.0001	1	Tee, Male Br-Tn Pl.25flrx
15	00435.0001	1	Elbow, Tin Pld .125npt F
16	38379.0000	1	Switch, Pressure-Low Sweet
17	00484.0001	1	Needle valve
18	11707.0013*	1	Tube, Silicone .250” I.D. x 28.0” LG (Order item 21)
19	12422.0000	2	Clamp, Hose - SNP 6
20	40784.0000	1	Tee, 1/8-27 Npt Hex Hd 1/4"Barb
21	26371.0000	1	Decal, Water Inlet (Models w/Sweetener)
22	26371.0001	1	Decal, Sweetener Inlet (Models w/Sweetener)
The following items are not illustrated			
23	11707.1001	-	Tube, Silicone .250” I.D. x .50” O.D. x 36” LG
	11707.1002	-	Tube, Silicone .250” I.D. x .50” O.D. x 120” LG
24	40203.0000	1	Tube Assy, Product Empty (Includes 4-17)

* Indicates the part number listed is for reference only. See DESCRIPTION for possible service replacement.

* Indicates the part number listed is for reference only. See DESCRIPTION for possible service replacement.

TB3QA & TB3Q-LP PLUMBING

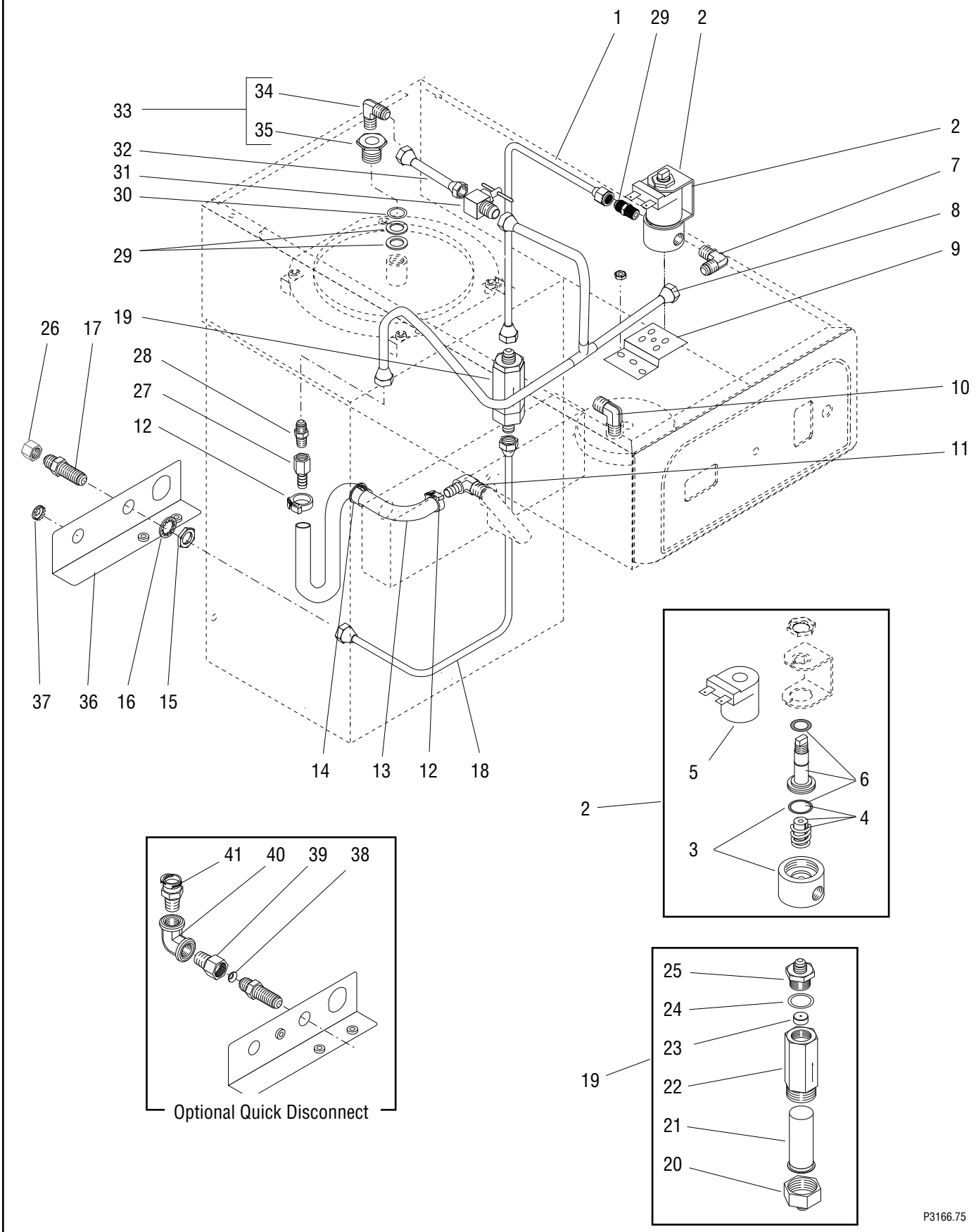

TB3QA & TB3Q-LP PLUMBING

ITEM	PART NO.	QTY.	DESCRIPTION
1	36597.0005	1	Tube Assy, Flow Control to Solenoid
2	01085.0002	1	Solenoid Valve 120V (Includes Items 3-6)
	01975.0000	1	Solenoid Valve 240V (Includes Items 3-6)
	01327.0000	2	Screw PNH #10-32 x .375˝
	01502.0000	2	Lockwasher #10
3	28479.0000	1	Base Kit 120V (Includes O-Ring)
	01079.0000	1	Base Kit 240V (Includes O-Ring)
4	01111.0002	1	Valve Repair Kit 120V (Includes Plunger, Spring & O-Ring)
	01111.0000	1	Valve Repair Kit 240V (Includes Plunger, Spring & O-Ring)
5	28480.0000	1	Valve Coil (120V)
	01100.0000	1	Valve Coil (240V)
6	28481.0000	1	Guide Kit 120V (Includes Washer & O-Ring)
	01116.0000	1	Sleeve Kit 240V
7	00400.0001	2	Elbow .25˝ Flare x .125˝ MPT
8	21179.0000	1	Tube Assy, Needle Valve to Dilution (See Item 44)
9	07441.0000	1	Bracket, Solenoid Valve Mounting
	00970.0000	2	Nut, Keps #8-32
10	21695.0001	1	Elbow .375˝ Compression x.125˝ MPT (Early Models)
11	40783.0000	1	Elbow, 1/8-27 NPT TO 1/4" BARB
12	12422.0000	2	Clamp
13	11707.0019*	1	Tube, Silicone .250˝ ID x 12.0˝ Lg (Order item 44)
14	01592.0001	1	Bushing, Snap 1.0˝ Dia
15	00463.0000	1	Nut, Hex .375” -20
16	01532.0000	1	Lockwasher, Internal Tooth - .438˝
17	00459.0000	1	Fitting, Bulkhead
18	37093.0000	1	Tube Assy, Strainer/Flow Control to Bulkhead
19	37855.0750	1	Strainer/Flow Control .750 GPM (Includes Items 20-25)
20	22249.0000	1	Fitting, Flow Control Inlet
21	23721.0000	1	Screen
22	22312.0000*	1	Body (Not Serviced, Order Item 19)
23	37857.0750	1	Flow Washer/ Gasket Kit .750 GPM (Includes Item 24)
24	01155.0000	1	Gasket
25	36687.0000	1	Fitting, Flow Control Outlet

(Continued)

* Indicates the part number listed is for reference only. See DESCRIPTION for possible service replacement.

TB3QA & TB3Q-LP PLUMBING

(Continued)

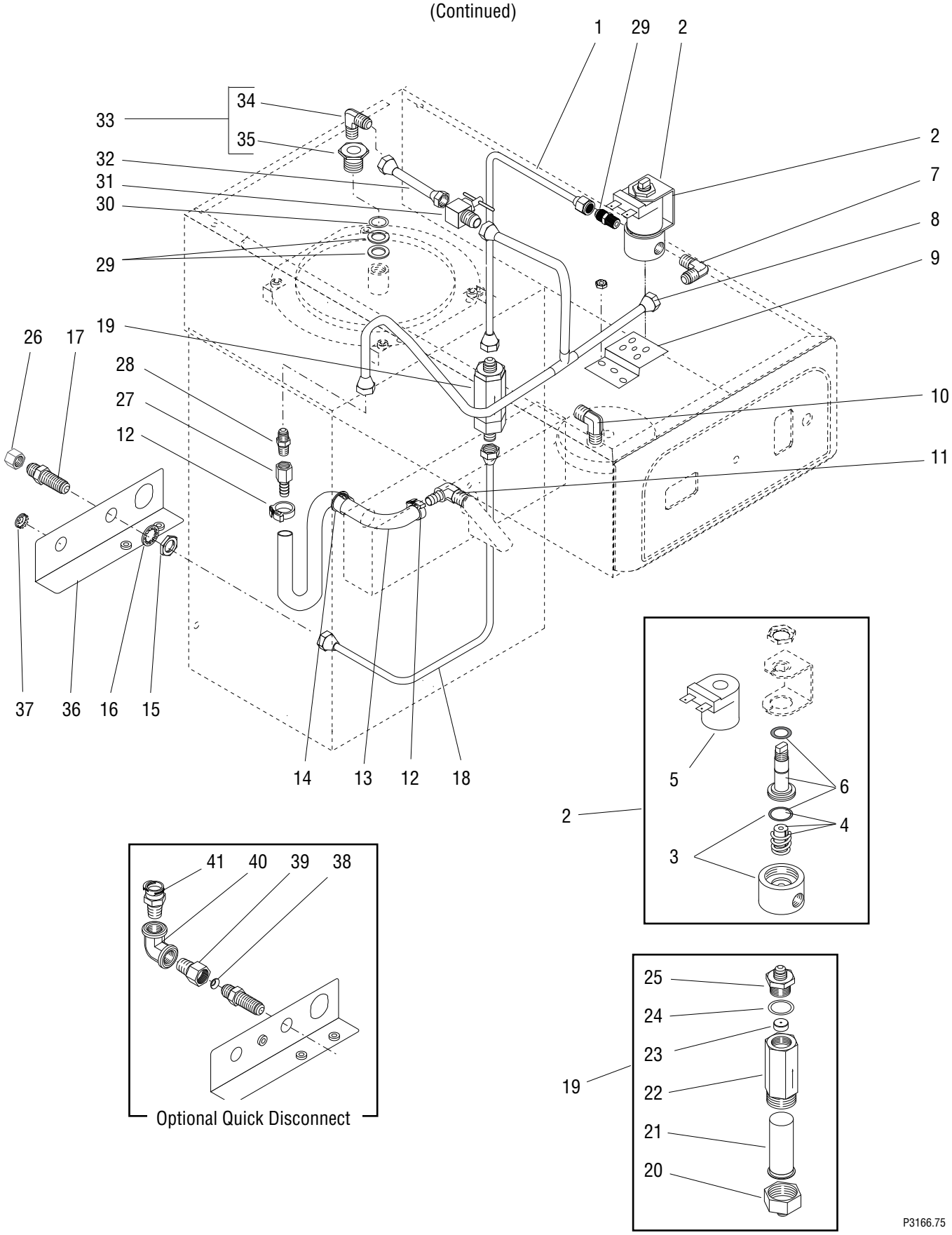

TB3QA & TB3Q-LP PLUMBING

ITEM	PART NO.	QTY.	DESCRIPTION
26	22145.0000	1	Cap, Shipping
27	00469.0001	1	Connector, .25” FPT x .25” Barb (See Item 43)
28	00402.0001	1	Connector, .25” Flare x .25” MPT (See Item 43)
29	01201.0000	2	Gasket, Tank inlet
30	01540.0000	1	Washer
31	00484.0001	1	Needle Valve (See Item 43)
32	03535.0000	1	Tube Assy, Needle Valve to Tank (See Item 43)
33	00460.0500	1	Fitting, Tank Inlet (Includes Items 34 & 35)
34	00400.0001	1	Elbow, Male - TNPL .25” FLR x .12 MPT
35	00948.0000	1	Fitting, Inlet - .750” -16 x .12 FPT
36	36421.1002	1	Bracket, Bulkhead 120V
	36421.1003	1	Bracket, Bulkhead 230V
	02308.0000	2	Screw, Pan Head #8-32 x .38”
37	00669.0002	1	Plug (Units without Sweetner)
38	24684.0000	1	Gasket
39	00472.0001	1	Adapter
40	00473.0001	1	Elbow
41	00424.0000	1	Fitting, Quick Disconnect

The following items are not illustrated

43	03532.0000	-	Tube Assy, Manifold to Solenoid (Includes Items 8, 27, 28, 31 & 32)
44	11707.1000	-	Tube, Silicone .250” I.D. x .50” O.D. x 12” LG (Cut to Required Length)
	11707.1001	-	Tube, Silicone .250” I.D. x .50” O.D. x 36” LG (Cut to Required Length)
	11707.1002	-	Tube, Silicone .250” I.D. x .50” O.D. x 120” LG (Cut to Required Length)

* Indicates the part number listed is for reference only. See DESCRIPTION for possible service replacement.

TB3A & TB3-LP PLUMBING

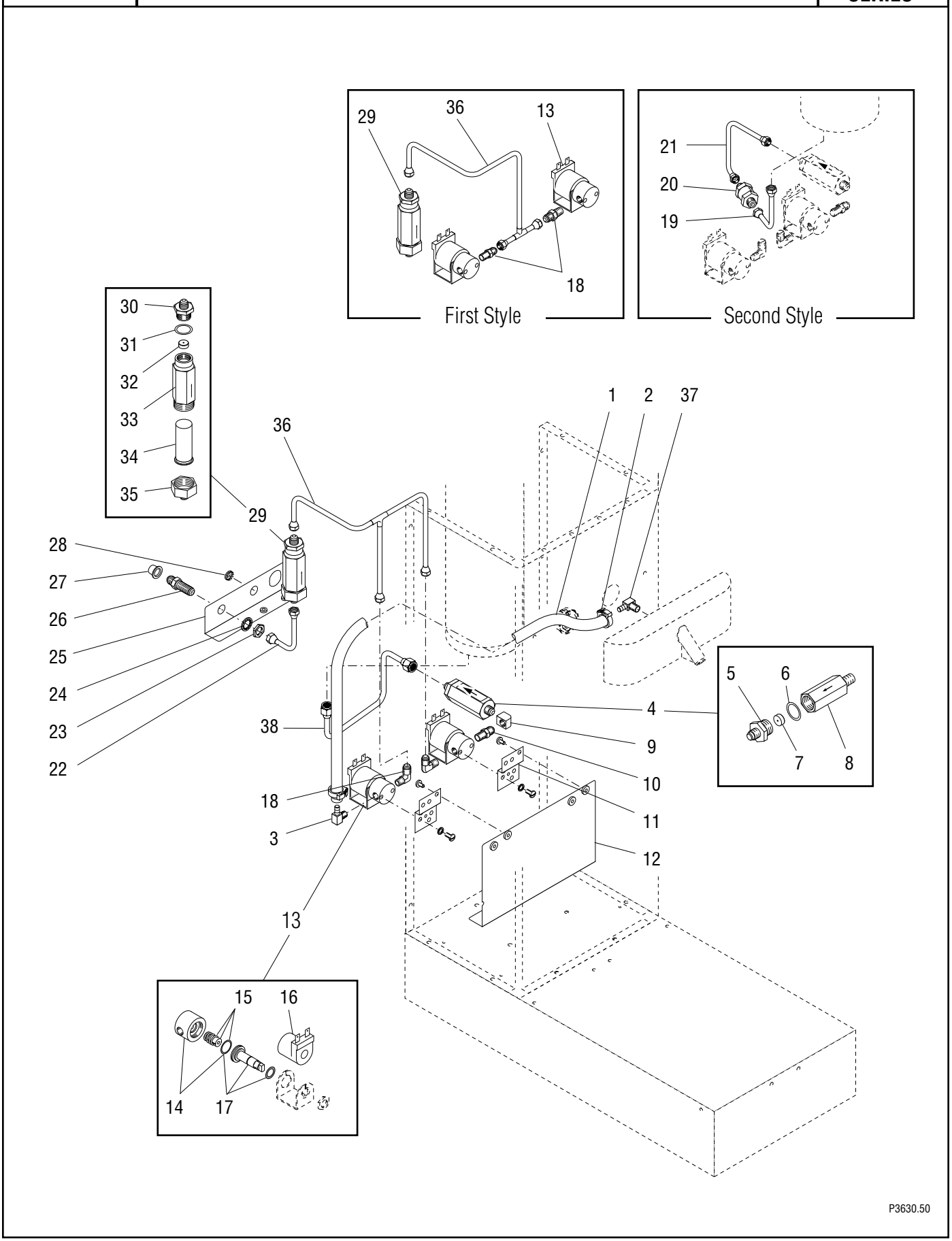

TB3A & TB3-LP PLUMBING

ITEM	PART NO.	QTY.	DESCRIPTION
1	11707.0008*	1	Tube, Silicone .250" I.D. x 31.0" LG (Order item 37)
2	12422.0000	2	Clamp, Hose - Snap Type .47"/.54" I.D.
3	00464.0001	1	Elbow, .250” Barb x .125” MPT (1 Included in dilution nozzle kit)
4	20528.1195	1	Flow Control Assembly (.195 GPM) (Includes items 4 thru 8)
5	01154.0001	1	Fitting, Flow Control Outlet
6	01155.0000	1	Gasket, Flow Control
7	20526.1195	1	Flow Washer/Gasket Kit (.195 GPM) (Includes item 6)
8	20527.0001*	1	Body, Flow Control (Not Available. Order item 4)
9	00435.0001	1	Elbow, .125" NPT Female
10	00412.0001	1	Nipple, .125" NPT
11	07441.0000	2	Bracket
	01315.0000	4	Screw, Truss Head #8-32 x .38"
12	38770.0000	1	Bracket
	02308.0000	2	Screw, Pan Head #8-32 x .38"
13	01085.0002	2	Solenoid Valve, 120V (Includes items 14 - 17)
	01327.0000	4	Screw, Pan Head #10-32 x .375"
	01502.0000	4	Lockwasher, Split #10
14	28479.0000	1	Solenoid Valve Base
15	01111.0002	1	Solenoid Valve Repair Kit (Includes Plunger, Seal and Spring)
16	28480.0000	1	Solenoid Valve Coil 120V
17	28481.0000	1	Guide
18	00402.0001	2	Connector, .25" Male Flare x .125" NPT (Early Models)
	00400.0001	2	Elbow, Male .25" Flare x .125" MPT (Late Models)
19	00310.0013	1	Tube Assembly, Check Valve to Tank
20	01171.0001	1	Valve, Check
	01170.0000	1	Check Valve Repair Kit (Contains a gasket, spring & seat assembly)
21	38880.0000	1	Tube Assembly, Flow Control to Check Valve
22	00310.0014	1	Tube Assembly, Bulkhead to Strainer
23	00463.0000	1	Nut, Hex - Brass .438"-20
24	01532.0000	1	Lockwasher, Internal Tooth .438"
25	36421.0005	1	Bracket, Bulkhead
	02308.0000	2	Screw, Pan Head #8-32 x .38"
26	00459.0000	1	Fitting, Bulkhead .250" Flare
27	22145.0000*	1	Cap (For shipping purposes only)

(Continued)

* Indicates the part number listed is for reference only. See DESCRIPTION for possible service replacement.

* Indicates the part number listed is for reference only. See DESCRIPTION for possible service replacement.

TB3A & TB3-LP PLUMBING

(Continued)

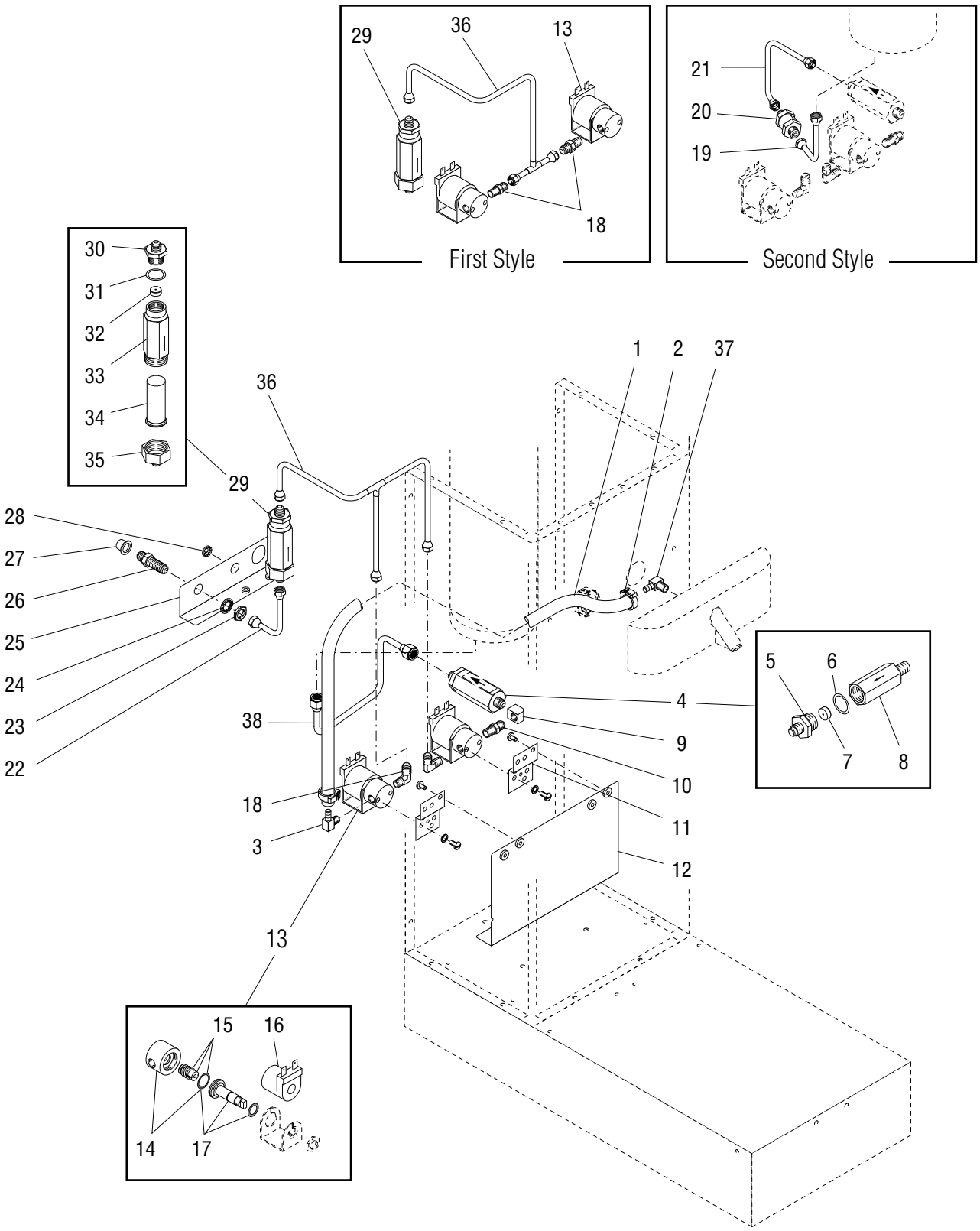

P3630.50

TB3A & TB3-LP PLUMBING

ITEM	PART NO.	QTY.	DESCRIPTION
28	00669.0002	1	Plug, Hole .50" Dia.
29	37855.0750	1	Strainer/Flow Control Assembly (Includes items 30 thru 35)
30	36687.0000	1	Fitting, Flow Control Outlet
31	01155.0000	1	Gasket, Flow Control
32	37857.1750	1	Flow Washer/Gasket Kit (Includes item 31)
33	22312.0000*	1	Body (Not Available. Order item 29)
34	23721.0000	1	Screen
35	22249.0000	1	Fitting, Flow Control Inlet
36	38879.0000	1	Tube Assembly, Strainer to Solenoid Valves (Early Models)
	38879.0001	1	Tube Assembly, Strainer to Solenoid Valves (Late Models)
37	40783.0000	1	Elbow, 1/8-27 NPT TO 1/4" BARB

The following items are not illustrated

38	11707.1001	-	Tube, Silicone .250" I.D. x .50" O.D. x 36" LG
	11707.1002	-	Tube, Silicone .250" I.D. x .50" O.D. x 120" LG
39	39782.0000	1	Tube Assembly, Flow Control to Tank (Third Style Only)

* Indicates the part number listed is for reference only. See DESCRIPTION for possible service replacement.

* Indicates the part number listed is for reference only. See DESCRIPTION for possible service replacement.

ELECTRICAL AND OPERATING CONTROLS

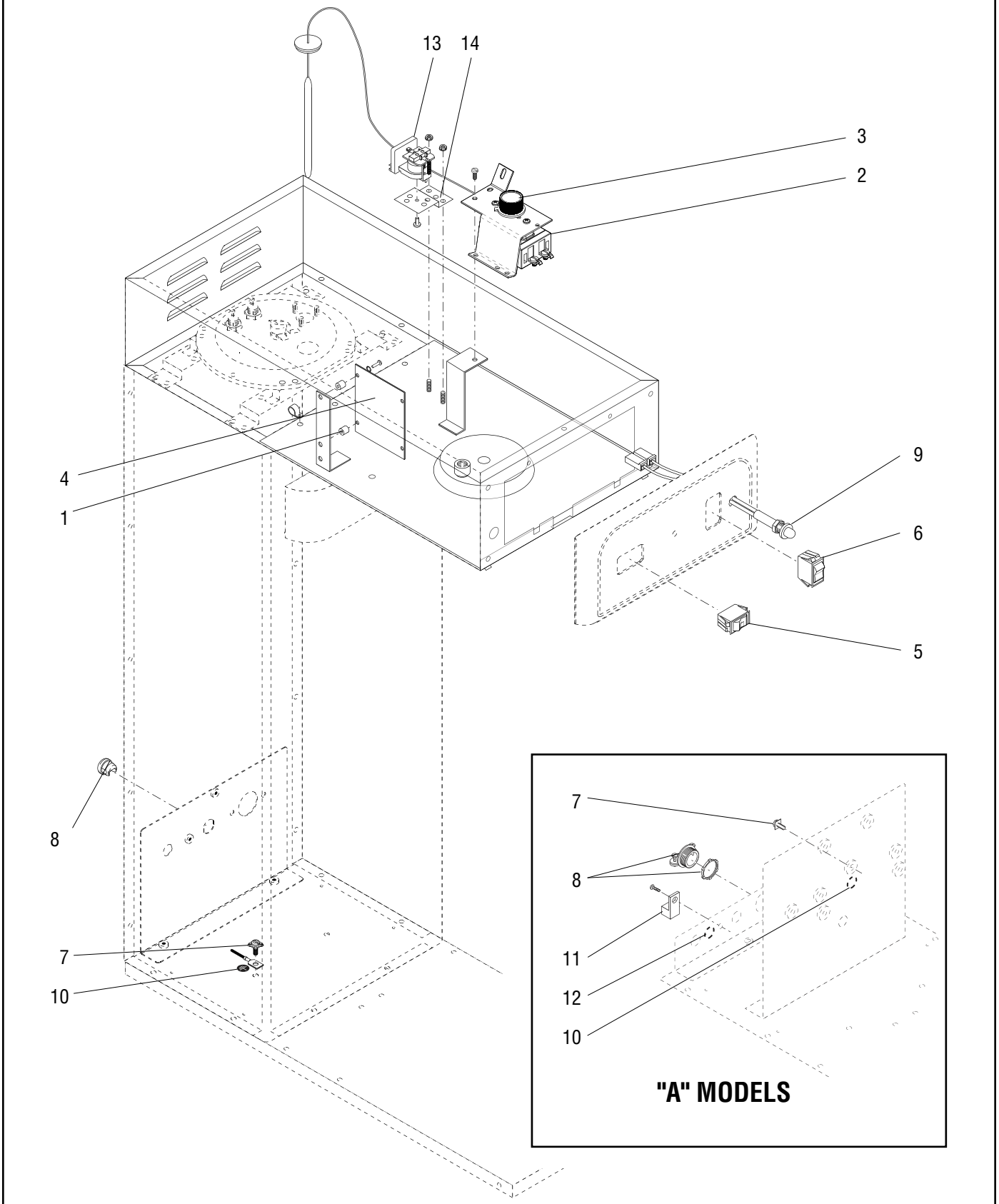

P3038.60

ELECTRICAL AND OPERATING CONTROLS

ITEM	PART NO.	QTY.	DESCRIPTION
1	01533.0000	4	Spacer, .171” I.D. x .375” O.D. x .375” LG
2	03024.0005	1	Thermostat Kit 120V (Includes item 4)
	01347.0000	1	Screw, Truss Head Serrated #6-32 x .375”
	10003.0000	1	Tag, Thermostat
3	00720.0000	1	Knob, Thermostat
4	40384.1000	1	Timer, Dual - 120V/230V/240V (TB3/TB3-LP Only)
	32400.0002	1	Digital Timer, Brew - 100V/120V (RoHS) (TB3Q/TB3Q-LP ONLY)
	32400.0003	1	Digital Timer, Brew - 230V/240V (RoHS) (TB3Q/TB3Q-LP ONLY)
	01388.0000	2	Screw, Pan Head #6-32 x .75”
	01510.0000	2	Lockwasher, External Tooth #6
5	37080.0000	1	Switch, ON/OFF (Black) - 100V & 120V
	03356.0003	1	Switch, UNSWEET/OFF/SWEET (Black)
6	37079.0000	1	Switch, Start (Black) - 100V & 120V
	37080.0001	1	Switch, Start (Green Ready Light) - 100V & 120V
7	37804.0000	1	Screw, Power Cord Ground - Pan Head W/Washer #8-32 x .50”
8	00707.0000	1	Bushing, Strain Relief 120V
	01685.0000	1	Connector, Power Cord w/Nut (230V)
9	12984.0011	1	Red Light (Models with Sweetener Empty Light)
10	00824.0000	2	Decal, Ground
11	27705.0000	1	Terminal Lug (CE Only)
	02308.0000	4	Screw, Pan Head #8-32 x .38”
12	00824.0001	1	Decal, Equipotentiality (CE Only)
13	02618.0000	1	Relay, 120V SPDT (Models With Sweetener)
	02328.0000	1	Screw,Pnh Sltd 6-32x.375”
14	07441.0000	1	Bracket, Solenoid Valve Mounting
	00970.0000	2	Nut, Keps #8-32

The following items are not illustrated

15	21000.0725	1	Lead, Warmer Blanket to Main Harness 18AWG BLK 12.0” LG
	21001.0723	1	Lead, Warmer Blanket to Main Harness 18AWG WHI 12.0” LG
16	01637.0000	1	Cord, Power 120V & 100V
	27728.0001	1	Cord, Power 230V
17	03739.0000	1	Wiring Harness, Main 120V & 100V (TB3 W/Ready Light built into Start Switch)
	03740.0001	1	Wiring Harness, Main 230V (TB3A Only)
	10301.0003	1	Wiring Harness, Main 230V (TB3QA Only)
	10301.0004	1	Wiring Harness, Main 120V (TB3Q Only)
18	38380.0000	1	Wiring Harness, Relay-Pressure Switch-Timer (Models w/Low Swtnr Sensor)
19	36451.0002	1	Wiring Harness, Sweetener Solenoid to Dilution Solenoid to Selector Switch
20	40406.0000	1	Lead 16AWG BLU/BLK
	40406.0001	1	Lead 16AWG BLK

(Continued)

* Indicates the part number listed is for reference only. See DESCRIPTION for possible service replacement.

ELECTRICAL AND OPERATING CONTROLS

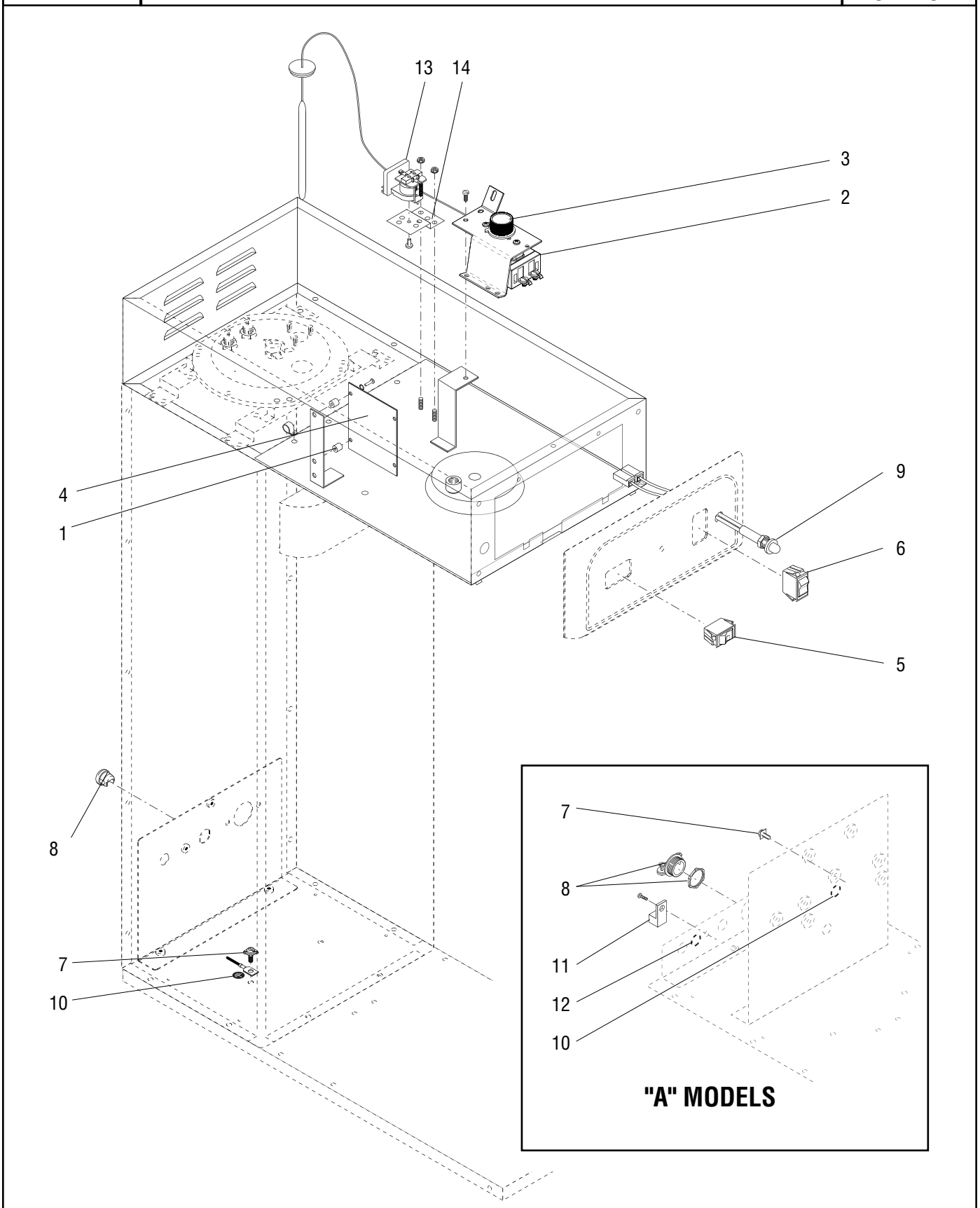

P3038.60

ELECTRICAL AND OPERATING CONTROLS

ITEM	PART NO.	QTY.	DESCRIPTION
21	40406.0002	1	Harness, T. Stat/Limit/Ready Light Start Switch (BLU/BLK) (TB3/TB3Q)
	40406.0003	1	Harness, T. Stat/Limit/Ready Light Start Switch (BLK) (TB3/TB3B/TB3Q)
22	06064.0000	1	Label, Cord Warning
23	28173.0004	1	Thermal Cut Off, WHI 14.0” - 230V 144° C
	04776.0001	1	Thermal Cut Off, 4.5” - 230V 144° C

* Indicates the part number listed is for reference only. See DESCRIPTION for possible service replacement.

Standard Brew Tea Funnel

2
8
3
4
1
5
7

2
3
4
8
1
5
6
7

Quick Brew Tea Funnel

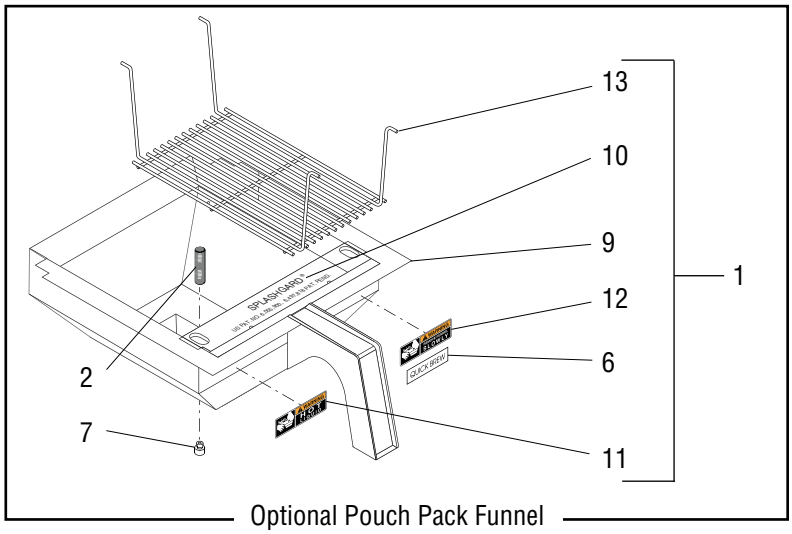

Optional Pouch Pack Funnel

P4019

FUNNEL ASSEMBLIES

ITEM	PART NO.	QTY.	DESCRIPTION
1	03021.0005	1	Funnel Assembly, Smoke - **QUICK BREW** (Includes items 2 thru 8)
	03021.0004	1	Funnel Assembly, Brew Tea - **STANDARD BREW** (Includes items 2 thru 8)
	35282.0001	1	Funnel Assembly, Smoke - Pouch Pack **QUICK** (Includes items 2, 6, 7 & 11 thru 15)
	35282.0002	1	Funnel Assembly, Smoke - Pouch Pack **STANDARD** (Includes items thru 15)
2	03284.0000	1	Adaptor W/Screen, Funnel (See item 9)
3	33129.0000*	1	Funnel, Brew Tea - Smoke (Not Available. Order item 1)
4	03408.0000	1	Decal, Caution - Remove Funnel
5	03409.0000	1	Decal, Caution - Hot Liquid
6	03536.0000	1	Decal, Quick Brew
7	03407.0000	1	Funnel Tip, .082” Dia **STANDARD BREW** (See item 14)
	03407.0002	1	Funnel Tip, .114” Dia **QUICK BREW** (See Item 14)
8	32965.0000	1	Splashgard
9	34439.0001*	1	Funnel, Pouch Pack - Smoke (Not Available. Order item 1)
10	34438.0000	1	Splashgard, Pouch Pack
11	03408.0002	1	Decal, Warning - Remove Funnel
12	03409.0002	1	Decal, Warning - Hot Liquid
13	29916.0000	1	Insert, Wire Form - Pouch Pack

The following items are not illustrated

14	01037.0002	-	Funnel Tip & Screen Kit .082” Dia **STANDARD BREW** (Includes items 2 & 7)
	01037.0003	-	Funnel Tip & Screen Kit .114” Dia **QUICK BREW** (Includes items 2 & 7)

* Indicates the part number listed is for reference only. See DESCRIPTION for possible service replacement.

PART NO.	PAGE NO.
00310.0002	11
00305.0001	11
00310.0012	13
00310.0013	19
00310.0014	19
00400.0001	13,15,17,19
00402.0001	17,19
00406.0001	9
00412.0001	19
00424.0000	17
00431.0001	13
00435.0001	13,19
00445.0001	11
00459.0000	13,15,19
00460.0500	17
00463.0000	13,15,19
00464.0001	13,19
00469.0001	17
00472.0001	17
00473.0001	17
00484.0001	11,13,17
00620.0000	9
00656.0000	5
00669.0002	17,21
00707.0000	23
00720.0000	23
00824.0000	23
00824.0001	23
00831.0000	5
00908.0000	9
00942.0000	9
00943.0000	9
00948.0000	17
00970.0000	7,15,23
01037.0002	27
01037.0003	27
01075.0000	9
01079.0000	13
01079.0000	15
01082.0000	9
01082.0003	9
01085.0000	13
01085.0002	15,19
01100.0000	15
01101.0000	13
01111.0000	13,15
01111.0002	15,19
01116.0000	13,15
01154.0001	11,19
01155.0000	11,15,19,21
01170.0000	19
01171.0001	19
01201.0000	17
01308.0002	7
01308.0003	5
01311.0001	5
01311.0004	5
01315.0000	19
01327.0000	13,15,19
01347.0000	23
01388.0000	23
01502.0000	5,13,15,19
01510.0000	23
01532.0000	13,15,19
01533.0000	23
01540.0000	17
01592.0001	5,15
01637.0000	23
01685.0000	23
01975.0000	15
02308.0000	5,9,17,19,23
02328.0000	23
02332.0002	7
02332.0005	5
02337.0002	9
02618.0000	23
03021.0004	27
03021.0005	27
03024.0005	23
03068.0000	9
03070.1000	9
03284.0000	27
03297.1000	9
03299.1000	9
03355.1000	23
03356.0003	23
03370.1001	9
03125.0002	9
03407.0000	27
03407.0002	27
03408.0000	27
03408.0002	27
03409.0000	27
03409.0002	27
03470.0000	9
03532.0000	17
03535.0000	17
03536.0000	27
03537.0000	5
03739.0000	23
03740.0001	23
03996.0000	7
04776.0001	25
04844.0000	9
05515.0000	9
05518.0000	9
06064.0000	25
07441.0000	13,15,19,23
01315.0000	13
10003.0000	23
10301.0003	23
10301.0004	23
11707.0007	11
11707.0008	19
11707.0013	11,13
11707.0019	15
11707.1000	17
11707.1001	11,13,17,21
11707.1002	11,13,17,21
12422.0000	11,13,15,19
12422.0001	11
12984.0011	23
20315.0001	9
20526.1195	11
20526.1195	19
20527.0001	11,19
20528.1195	11,19
20976.0041	11
20976.0046	11
20976.1000	11
20976.1001	11
20976.1002	11
21000.0725	23
21001.0723	23
21179.0000	15
21695.0001	15
22145.0000	17,19
22249.0000	15,21
22312.0000	15,21
23721.0000	15,21
24684.0000	11,17
25137.0001	7
26371.0000	13
26371.0001	13
26443.0000	11
26528.0001	7
27432.0000	5
27705.0000	23
27728.0001	23
28173.0004	25
28479.0000	15,19
28480.0000	15,19
28481.0000	15,19
29329.1000	9
29916.0000	27
32283.0000	11
32400.0002	23
32540.0000	5
32591.0025	9
32591.1002	9
32965.0000	27
33027.0001	11
33129.0000	27
34438.0000	27
34439.0001	27
34948.1002	5
34948.1003	5
35282.0001	27
35282.0002	27
36353.0012	5
36353.0013	5
36353.0014	5
36355.1002	5
36356.1010	5
36356.1011	5
36356.1013	5
36360.1001	5
36362.0002	7
36412.0000	7
36421.0005	19
36421.1002	17
36421.1003	17
36451.0002	25
36461.0000	7
36462.0000	7
36576.0000	9
36580.0001	5
36582.0001	9
36584.0001	5
36584.0003	5
36586.0000	5
36590.0000	5
36590.0002	5
36590.0017	5
36594.0003	5
36597.0005	15
36687.0000	15,21
36877.0000	7
36923.0002	7
36997.1000	5
37079.0000	23
37080.0000	23
37080.0001	23
37093.0000	15
37233.1006	9
37233.1007	9
37233.1008	9
37233.1009	9
37234.0000	5
37234.0001	5
37234.0006	5
37234.0009	5
37297.0000	11
37538.0000	7
37573.0000	7
37804.0000	23
37855.0750	15,21
37857.0750	15
37857.1750	21
37881.0000	5
38379.0000	13
38380.0000	25
38582.1000	23
38728.1000	23

38770.0000..... 19
38879.0000..... 21
38879.0001..... 21
38880.0000..... 19
38969.0001..... 9
39782.0000..... 21
40187.0001..... 11
40203.0000..... 13
40297.1000..... 11
40304.0000..... 11
40406.0000..... 23
40406.0001..... 23
40406.0002..... 25
40406.0003..... 25
40783.0000..... 11,15,21
40784.0000..... 13
41035.1000..... 11
41035.1001..... 11

Commercial Kitchen Equipment Parts

Find more Bunn equipment resources at

parthubz.com/equipment/bunn

Need parts or service?

Call 833-700-8006

support@parthubz.com

parthubz.com