Commercial Kitchen Equipment Parts

CHAMPION 66 PRO

Champion 66 PRO Specification Sheet

Provided by PartHubz

parthubz.com

833-700-8006 | support@parthubz.com

Champion®
The Dishwashing Machine Specialists

PROJECT: _____
ITEM # _____ QTY: _____
MODEL # _____
AIA # _____ SIS # _____

66 PRO-FF-VHR Electric

HIGH TEMPERATURE ELECTRIC RACK CONVEYOR

Rendered image is for general visual representation only. Please refer to specifications for the latest detailed product information.

STANDARD FEATURES

- **44" Single Tank + 22" Prewash, Frontfeed**
- **New Ventless Heat Recovery Technology**
- **No Type II Exhaust Hood Required**
- **Saves Up To 13kw During Operation**
- **Less Than 70° Conditioned Air Back Into The Dish Room**
- **Patented Modulation Valve Pressure System**
- **Perpetual Rack Advance System** with digital jam monitoring, and mechanical drive protection
- **Automated Delime Function** with user-customizable alert intervals
- **209 Racks Per Hour**
- **0.48 Gallons/Rack With Energy Sentinel** (idle pump shut-off)
- **Advanced Touchscreen Display** intuitive condition alerts, with user friendly cleaning and operation visual guidance, multi-lingual
- **Enhanced Visual On-board Diagnostics** quickly identify machine faults for rapid resolution and less downtime
- **Automatic Tank Fill**
- **Programmable Machine Dwell** pauses rack in wash zone for extended cleaning, NSF Certified Pot & Pan Mode
- **Automatic Drain Valve**
- **Single-Piece Hood Design**
- **Single-Piece Scrap Screen** more robust and faster cleaning
- **Single-Piece Stainless Steel Upper And Lower Wash Arm Manifolds**
- **20" Standard Vertical Clearance** accommodates 18" x 26" sheet pans
- **Fully Insulated Doors** open a full 180° for unrestricted cleaning access
- **All Stainless Steel Heavy Gauge Construction** including base, legs and feet
- **Enclosure Panels** (front and sides)
- **2 HP Pump Motor** with stainless steel impeller
- **Factory Authorized Start-Up**
- **ENERGY STAR® Certified**

Certifications apply to the machine only.

SPECIFIER STATEMENT

Specified unit will be Champion Model 66 PRO-FF-VHR Series, Ventless Heat Recovery high temperature rack conveyor front feeding dishwashing machine. Features top mounted Prodigy HMI user interface controls with proactive maintenance software, proportional rinse, using only 100 GPH, built-in 21 kW booster, progressive anti-jam drive system, energy sentinel (idle pump shut-off), 209 racks per hour, single-piece hood design, single-piece stainless steel upper & lower wash arms manifolds, full 180° opening leak proof insulated hinged access doors.

1 Year parts and labor warranty.

In the USA:
3765 Champion Blvd, Winston-Salem, NC 27105
Tel: (336) 661-1556 Fax: (336) 661-1979
www.championindustries.com

In Canada:
2674 N. Service Rd., Jordan Station, Ontario, Canada L0R1S0
Tel: (905) 562-4195 Fax: (905) 562-4618
www.championmoyerdiebel.ca

Rev. 04/2026 Printed in U.S.A.

APPROVAL: _____ DATE: _____

Champion®
The Dishwashing Machine Specialists

66 PRO-FF-VHR Electric

HIGH TEMPERATURE ELECTRIC RACK CONVEYOR

ACCESSORIES

- ☐ Drain water tempering kit (unmounted)
- ☐ Table limit switch, unmounted (recommended on all rack conveyor installations) (unmounted)
  - o WHISKER STYLE
  - o BUTTON STYLE
- ☐ Flanged feet (unmounted)
- ☐ Water hammer kit (unmounted)
- ☐ Chemical pump kit (detergent and rinse aid, mounted and interwired)
- ☐ Water pressure regulating valve (unmounted; standard with booster)
- ☐ Water softening system (manufactured, warrantied and serviced by Kinetico)
- ☐ Dish racks:
  - o PEG RACK
  - o FLAT RACK
- ☐ Model PRO-90B unloader (90° corner conveyor table)
- ☐ Model RCT 64 or RCT 84 roller conveyor table (see factory for custom length)
- ☐ Stainless steel rear enclosure panels
- ☐ Correctional package (contact factory)
- ☐ 33" Blower Dryer - Electric
- ☐ Lime Shield - Automated Booster Delime

OPTIONS

- ☐ Direct link connectivity solution
- ☐ Direct link plus+ connectivity solution

PRO-90B
90° Corner Conveyor table unloader available

Model RCT 64 or RCT 84
Roller conveyor table

In the USA: 3765 Champion Blvd, Winston-Salem, NC 27105 | Tel: (336) 661-1556 Fax: (336) 661-1979 | **www.championindustries.com**
In Canada: 2674 N. Service Rd., Jordan Station, Ontario, Canada L0R1S0 | Tel: (905) 562-4195 Fax: (905) 562-4618 | **www.championmoyerdiebel.ca**

Rev. 04/2026 Printed in U.S.A.

Due to an ongoing value analysis program at Champion, specifications contained in this catalog are subject to change without notice.

Champion®
The Dishwashing Machine Specialists

66 PRO-FF-VHR Electric

HIGH TEMPERATURE ELECTRIC RACK CONVEYOR

UTILITIES

1	**Electrical Connections** A Machine electrical connection (to include tank heat) B Booster electrical connection
2	**Hot Water** Tank fill 1/2" NPT 110° incoming water (Initial Fill = 25 Gal)
3A	**Cold Water** Booster connection 1/2" NPT, minimum 50° at 40 PSI flowing
5A	**Drain** Connection 1-1/4" NPT Drain Max Flow Rate (g/min) 15

Warning: Plumbing and electrical connections should be made by qualified personnel who will observe all the applicable plumbing, sanitary, and safety codes and the National Electrical Code.

Note: Water Hammer Arrestor (meeting ASSE-1010 standard or equivalent) to be supplied (by others) in common water supply line at service connection.

Plumbing Notes: Because of the variation in house-supplied steam and water pressures, steam and water pressure regulating valves (PRVs) may be needed. (Water PRV is standard on machines with booster.) The PRVs can either be purchased from Champion or obtained locally.

Champion does not endorse using on-demand (tankless) water heating systems, as well as PEX and other plumbing materials that may limit water flow, as these could impair machine performance. For optimal results, we recommend using appropriately sized conventional hot water tanks and standard copper water supply lines that adhere to our specifications. Not following these recommendations may void the manufacturer's warranty.

Water hardness of 3 grains/US Gal (0.83 Imp Gal) - 5.3 Mg/L or less

Venting Notes: The Ventless feature is subject to local codes for ventilation requirements.

Optional Drain Tempering: 1/2" NPT cold water connection required. 1/2" NPT drain connection from back flow preventer to house drain. (FIELD INSTALLED and PLUMBED).

SPECIFICATIONS

Capacity	
Racks per hr (NSF rated)	209
Wash tank (US gal.)	17
Prewash tank (US gal.)	8
Conveyor speed (ft/min)	5.8
Conveyor speed Pot/Pan Mode (ft/min) (only one rack at a time in pot/pan)	4.5
Motor Horsepower	
Drive	1/6
Wash	2
Prewash	2
Water Consumption	
US Gal. per hr (max. use)	100
US Gal. per rack	0.48
Heating	
Tank Heat, electric (kW)	15
Electric booster (built-in) (kW supplied for 70°F rise)	21
Booster heaters completely inter plumbed, controls are interwired.	
Latent Heat Load	7285
Sensible Heat Load	8430
Standard 20"x 20" Rack Complement	
Peg	1
Flat	1

66 PRO-FF-VHR Electric Heat (1A)

Elec. Specs	Rated Amps	Minimum Supply Ckt. Conductor Ampacity	Maximum Overcurrent Protective Device
208/60/3	84	110	110
240/60/3	76	100	100
480/60/3	38	50	50
575/60/3	31	40	40

66 PRO-FF-VHR Electric 21 KW Booster (1B)

Elec. Specs	Rated Amps	Minimum Supply Ckt. Conductor Ampacity	Maximum Overcurrent Protective Device
208/60/3	59	80	80
240/60/3	51	70	70
480/60/3	26	35	35
575/60/3	22	30	30

66 PRO-FF-VHR Electric Tank Heat with 70° Rise Booster

Elec. Specs	Rated Amps	Minimum Supply Ckt. Conductor Ampacity	Maximum Overcurrent Protective Device
208/60/3	143	175	175
240/60/3	127	175	175
480/60/3	64	80	80
575/60/3	53	70	70

In the USA: 3765 Champion Blvd, Winston-Salem, NC 27105 | Tel: (336) 661-1556 Fax: (336) 661-1979 | **www.championindustries.com**

In Canada: 2674 N. Service Rd., Jordan Station, Ontario, Canada L0R1S0 | Tel: (905) 562-4195 Fax: (905) 562-4618 | **www.championmoyerdiebel.ca**

Rev. 04/2026 Printed in U.S.A.

Due to an ongoing value analysis program at Champion, specifications contained in this catalog are subject to change without notice.

Champion®
The Dishwashing Machine Specialists

66 PRO-FF-VHR Electric

HIGH TEMPERATURE ELECTRIC RACK CONVEYOR

Shipping weight crated: Machine only: 900 lbs. ; Heat Pump Only: 425 lbs. Dimensions shown in inches

Front View: Left to Right Model L-R

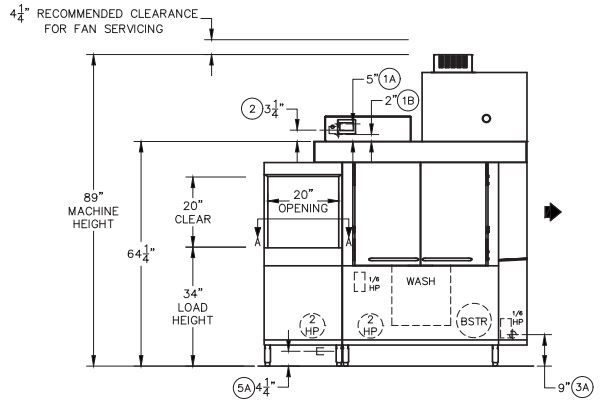

Front View: Right to Left Model R-L

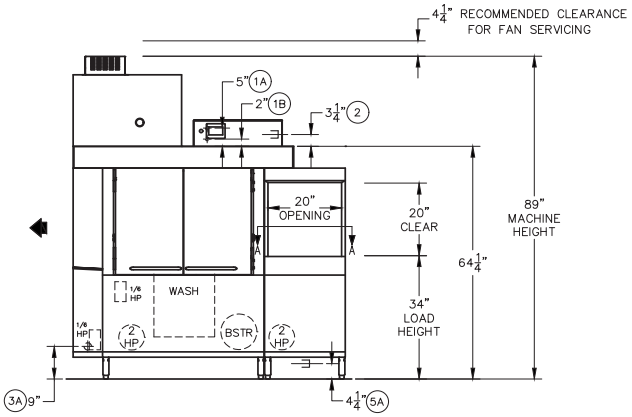

Plan View: Left to Right Model L-R

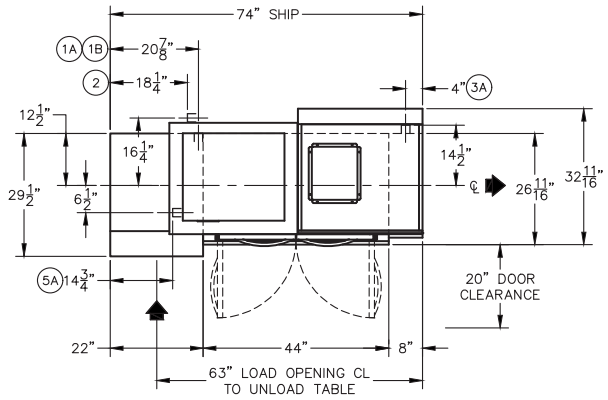

Plan View: Right to Left Model R-L

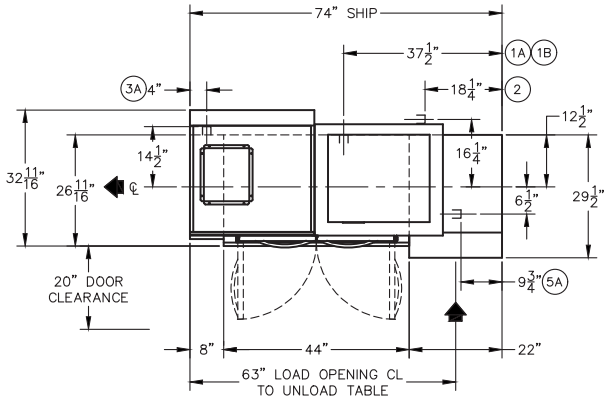

End View

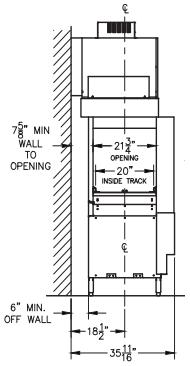

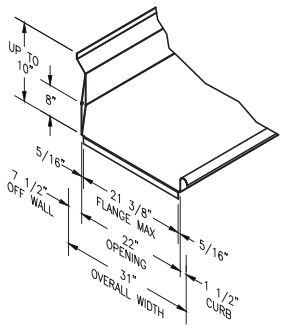

Suggested Table Construction

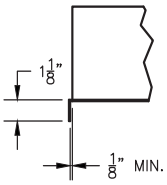

Flange Details

In the USA: 3765 Champion Blvd, Winston-Salem, NC 27105 | Tel: (336) 661-1556 Fax: (336) 661-1979 | **www.championindustries.com**

In Canada: 2674 N. Service Rd., Jordan Station, Ontario, Canada L0R1S0 | Tel: (905) 562-4195 Fax: (905) 562-4618 | **www.championmoyerdiebel.ca**

Rev. 04/2026 Printed in U.S.A.

Due to an ongoing value analysis program at Champion, specifications contained in this catalog are subject to change without notice.

WELBILT
an Ali Group Company

Commercial Kitchen Equipment Parts

Find more Champion equipment resources at

parthubz.com/equipment/champion

Need parts or service?

Call 833-700-8006

support@parthubz.com

parthubz.com