Commercial Kitchen Equipment Parts

CHAMPION DH2000

Champion DH2000 document

Provided by PartHubz

parthubz.com

833-700-8006 | support@parthubz.com

Champion®
The Dishwashing Machine Specialists

Project _____
Item No. _____
Quantity _____

DH2000 DOOR-TYPE

DH2000

High Temperature
Door-type
Dishwashing Machine

STANDARD FEATURES

- **NEW Exclusive** Field convertible to single or three phase, 208 or 240 volt, corner or straight through operation
- Built-in booster configured for 70° Rise
- Rinse Sentry – ensures 180°F final rinse
- Auto start – starts unit when doors are closed
- High temperature
- Single point connection
- High efficiency 1 HP pump
- 55 racks per hour
- Self draining pump
- Automatic tank fill
- Detergent/chemical connections
- Interchangeable upper and lower arm
- Top mounted splash proof controls
- Automatic drain valve
- Vent fan control
- Pressure regulating valve
- Low water tank heat protection

Photo is for general visual representation only. Please refer to specifications for the latest detailed product information.

OPTIONS & ACCESSORIES

- ☐ Drain Tempering Kit
- ☐ Side Panels
- ☐ ***NEW*** Champion ION scale prevention system

SPECIFIER STATEMENT

Specified unit will be Champion model DH2000 high temperature door-type dishwashing machine.

Features top mounted splash proof controls, Rinse Sentry, Auto start, interchangeable stainless steel wash and rinse arms, 55 racks/hr., .90 US gals/rack.

1 year parts and labor warranty.

Champion Industries, Inc.
3765 Champion Blvd., Winston-Salem, NC 27105
Tel: 336/661-1556 Fax: 336/661-1979
www.championindustries.com

(1M) 6/21 Printed in U.S.A.

DH2000 DOOR-TYPE

DH2000

High Temperature
Door-type
Dishwashing Machine

Champion®
The Dishwashing Machine Specialists

Shipping weight crated: 300 lbs.

Dimensions shown in inches

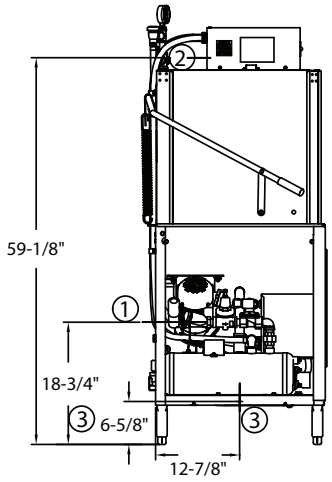

Side View

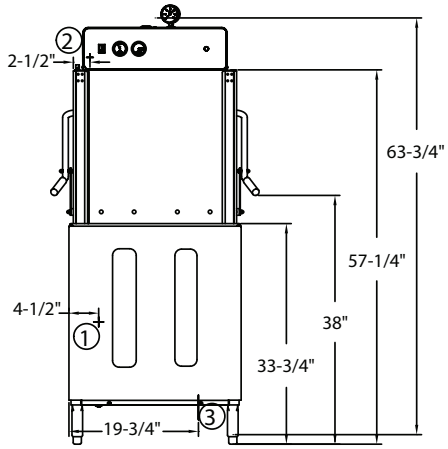

Front View

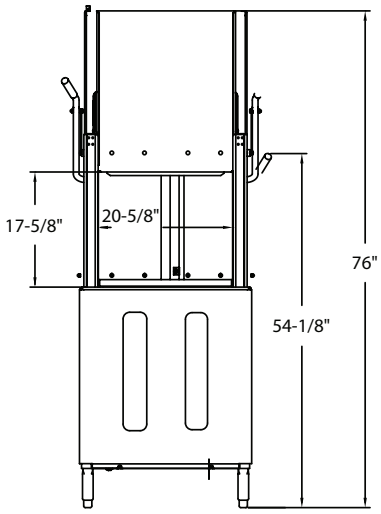

Door Clearance

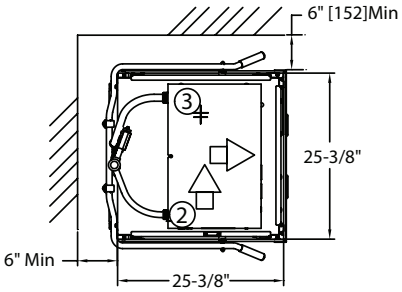

Corner Configuration

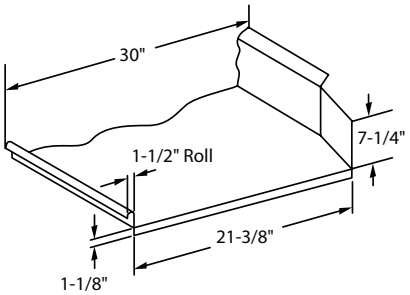

Typical Table Construction

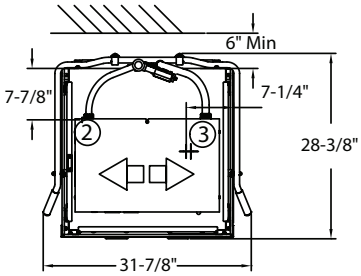

Straight Through

Utilities

1	**Water** 3/4" NPT Flow pressure 20-25 PSI Hot water 110°F (43°C)
2	**Electrical 70° Booster** **A.** 208-220/60/1 (See Box) **B.** 208-220/60/3 (See Box)
3	**Drain** **A.** 1" NPT Connection Gravity flow, 15 GPM max flow

Machine and Electric 40°F/70°F OR 70°F Rise Booster

Voltage	Rated Amps	Min. Supply Ckt. Conductor Ampacity	Max. Overcurrent Protective Device
208/60/1	65	80	80
240/60/1	75	80	80
208/60/3	40	50	50
240/60/3	45	50	50

SPECIFICATIONS

Capacities	
Racks per hr. (NSF rated)	55
Wash tank (gal.)	9.5
Motor horsepower	1 HP
Water consumption	
Gal. per hr. (max. use)	49.5
Gal. per rack	0.9
Temperature °F	
Wash	150
Rinse	180
Heating	
Tank heat, electric	5.2 kW
Electric Booster	7.5 kW
Time cycle in seconds	
Wash	40
Dwell	1
Rinse	12
Sanitary Dwell	7
Total cycle	60

Warning: Plumbing, electrical connections should be made by qualified personnel who will observe all the applicable plumbing, sanitary and safety codes and the National Electrical Code.

Due to an ongoing value analysis program at Champion, specifications contained in this catalog are subject to change without notice.

Champion Industries, Inc.,
3765 Champion Blvd., NC 27105
336/661-1556 • Fax: 336/661-1979
ChampionIndustries.com

Commercial Kitchen Equipment Parts

Find more Champion equipment resources at

parthubz.com/equipment/champion

Need parts or service?

Call 833-700-8006

support@parthubz.com

parthubz.com