Commercial Kitchen Equipment Parts

CHAMPION DH5000T

Champion DH5000T Specification Sheet

Provided by PartHubz

parthubz.com

833-700-8006 | support@parthubz.com

Champion®

The Dishwashing Machine Specialists

Project _____

Item No. _____

Quantity _____

GENESIS HOOD-TYPE

STANDARD FEATURES

- **ENERGY STAR® Qualified**
- **NEW Exclusive** Built-in booster configured for both 40° and 70° Rise
- Field convertible from straight to corner operation
- Dual NSF listed as both a dishwasher and potwasher
- Rinse Sentry – ensures 180°F final rinse
- Auto start – starts unit when hood is closed
- Single point electrical connection
- High efficiency 2 HP pump
- Up to 55 racks per hour
- Self draining pump
- Automatic tank fill
- Detergent/chemical connections
- Interchangeable upper and lower spray arm
- Automatic drain valve – drains wash tank when power is off
- Vent fan control
- Bottom mounted digital controls
- PRV (Pressure Reducing Valve)
- Sloped hood keeps hot vapors away from operator
- Standard and Heavy Duty wash cycles
- 4 selectable cycles
- 27" [686mm]– extended clearance

Genesis

DH5000T High Temperature
Hood-type Dishwashing Machine

GENESIS

OPTIONS & ACCESSORIES

- ☐ Drain Water Tempering Kit
- ☐ Direct Vent Option with fan
- ☐ Ventless/Heat Recovery/Condensate Removal option
- ☐ Door interlock – locks door closed during the vent fan cycle
- ☐ Hot water coil with gas booster
- ☐ Single phase option
- ☐ Racks
  - ☐ Peg
  - ☐ Flat
  - ☐ Sheet Pan rack

SPECIFIER STATEMENT

Specified unit will be Champion model Genesis, DH5000T high temperature hood-type dishwashing machine.

Features sloped hood, electronic controls, Rinse Sentry, Auto start, interchangeable stainless steel wash and rinse arms, up to 55 racks/hr., .85 US gals [3.37 liters, 0.74 imp. gals]/rack. 1 year parts and labor warranty.

Champion Industries, Inc.
3765 Champion Blvd., Winston-Salem, NC 27105
Tel: 336/661-1556 Fax: 336/661-1979

2674 N. Service Road
Jordan Station, Ontario, Canada L0R 1S0
Tel: 800/263-5798 Fax: 905/562-4618

www.championindustries.com

(1M) 12/12 Printed in U.S.A.

Pro/Line Marketing,Inc.

GENESIS HOOD-TYPE

Champion®

The Dishwashing Machine Specialists

GENESIS

DH5000T High Temperature
Hood-type Dishwashing Machine

Shipping weight crated: 300 lbs.

Dimensions shown in inches and [mm]

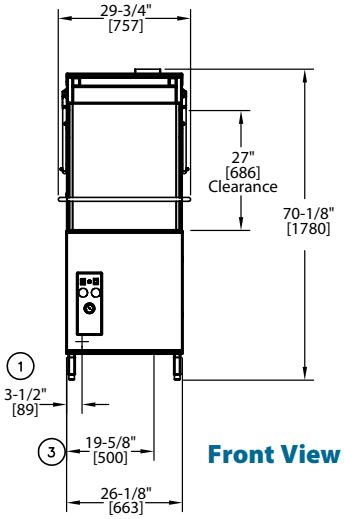

Front View

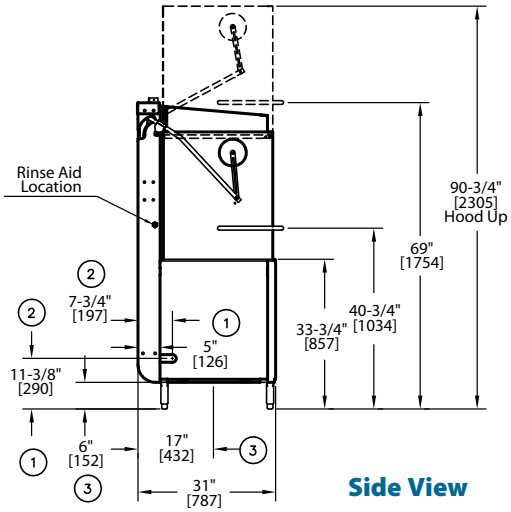

Side View

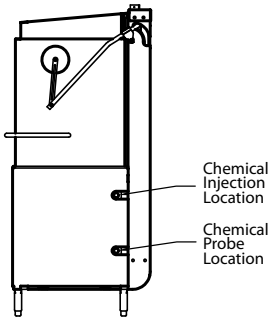

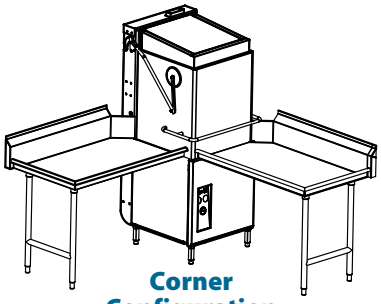

Corner Configuration

Typical Table Construction

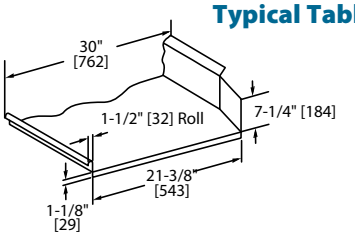

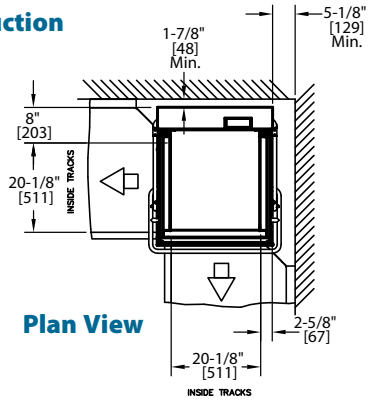

Plan View

Utilities

1	**Electrical** Machine Connection (See Electrical Box)
2	**Hot Water** 3/4" NPT Hot Water 110° - 140°F/43° - 60°C 20-22 PSI Flow pressure
3	**Drain** 2" [51mm] OD Connection 15 GPM max flow

Warning: Plumbing, electrical connections should be made by qualified personnel who will observe all the applicable plumbing, sanitary and safety codes and the National Electrical Code.

Electric Heat, No Booster

Voltage	Rated Amps	Minimum Supply Circuit Ampacity	Maximum Overcurrent Protective Device
208-240/60/1	35-39	45	45
208-240/60/3	21-24	30	30
460-480/60/3	11	20	20

Electric Heat, 40°/70° Rise Booster

Voltage	Rated Amps	Minimum Supply Circuit Ampacity	Maximum Overcurrent Protective Device
208-240/60/1	71-81	100	100
208-240/60/3	42-48	60	60
460-480/60/3	20-21	30	30

SPECIFICATIONS

Capacities

Racks per hr.	55
Wash tank (gal.)	9.5
[liters/imp gal.]	[36/7.9]

Motor horsepower 2 HP

Water consumption

Gal. per hr. (max. use)	47
[liters/imp gal.]	[177/39]
Gal. per rack (dishwasher)	0.85
[liters/imp gal.]	[3.2/0.7]
Gal. per rack (pot & pan washer)	1.18
[liters/imp gal.]	[4.5/0.98]

Temperature °F/°C

Wash	150/66
Rinse	180/82

Heating

Tank heat, electric	5.2 kW
Electric Booster	7.5-10 kW

Time cycle in seconds

	Dishwasher Mode		Pot/Pan Mode	
Wash	35	65	214	334
Rinse	10	10	15	15
Sanitary Dwell	15	15	11	11
Total cycle	60	90	240	360

'USGBC' and related logo is a trademark owned by the U.S. Green Building Council and is used by permission.
Due to an ongoing value analysis program at Champion, specifications contained in this catalog are subject to change without notice.

Champion Industries, Inc., 3765 Champion Blvd., NC 27105 • 336/661-1556 • Fax: 336/661-1979 • www.championindustries.com
Champion Industries, Inc. www.championindustries.com/canada • sales@moyerdiebellimited.com
2674 N. Service Road, Jordan Station, Ontario, Canada L0R 1S0 • 800/263-5798 • Fax: 905/562-4618

Pro/Line Marketing,Inc.

GENESIS

DH5000T High Temperature
Hood-type Dishwashing Machine

Champion®
The Dishwashing Machine Specialists

GENESIS HOOD-TYPE

Shipping weight crated: 350 lbs.

Dimensions shown in inches and [mm]

DIRECT VENT OPTION

Allows unit to vent directly to the outside.
No vent hood required.

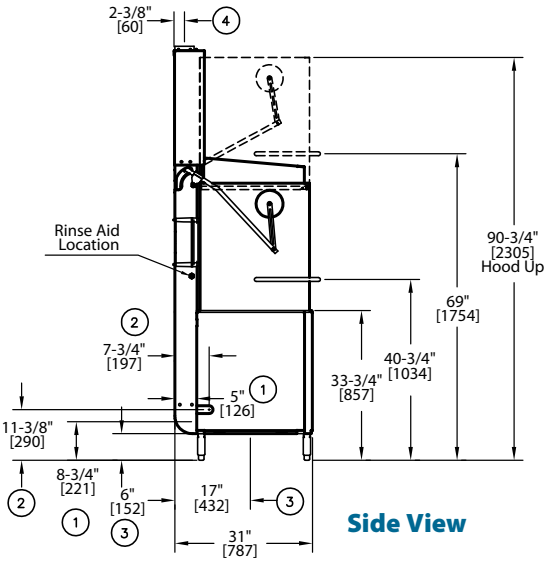

Side View

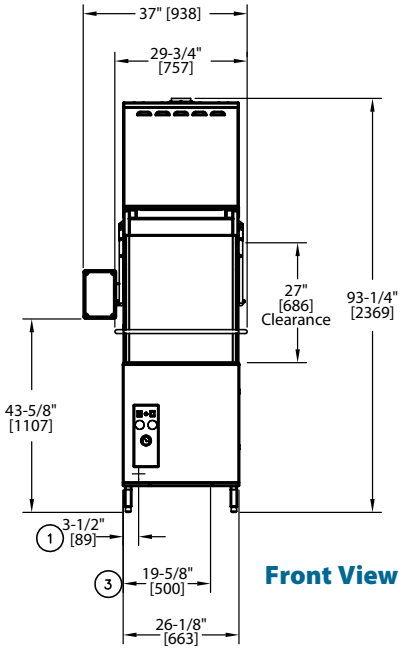

Front View

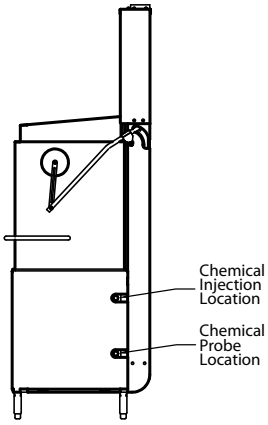

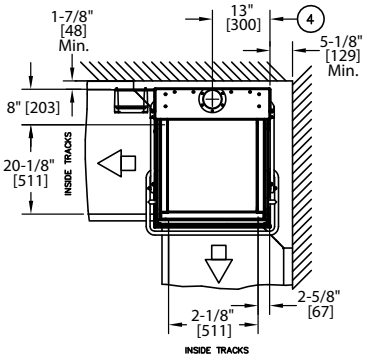

Plan View

For standard machine dimensions see DH5000T drawing

Utilities

1	**Electrical** Machine Connection (See Electrical Box)
2	**Hot Water** 3/4" NPT Hot Water 110° - 140°F/43° - 60°C 20-22 PSI Flow pressure
3	**Drain** 2" [51mm] OD Connection 15 GPM max flow
4	**Exhaust - Direct Vent Only** 250 CFM Fan 4" [102mm] Round Duct

Warning: Plumbing, electrical connections should be made by qualified personnel who will observe all the applicable plumbing, sanitary and safety codes and the National Electrical Code.

Electric 40°/70° Rise Booster			
Voltage	Rated Amps	Min. Supply Ckt. Conductor Ampacity	Min. Overcurrent Protective Device
208-240/60/1	71-81	100	100
208-240/60/3	42-48	60	60
460-480/60/3	20-21	30	30

SPECIFICATIONS

Capacities

Racks per hr.	48
Wash tank (gal.)	9.5
[liters/imp gal.]	[36/7.9]

Motor horsepower 2 HP

Water consumption

Gal. per hr. (max. use)	41
[liters/imp gal.]	[155/34]
Gal. per rack (dishwasher)	0.85
[liters/imp gal.]	[3.2/0.7]
Gal. per rack (pot & pan washer)	1.18
[liters/imp gal.]	[4.5/0.98]

Temperature °F/°C

Wash	150/66
Rinse	180/82

Heating

Tank heat, electric	5.2 kW
Electric Booster	7.5-10 kW

Time cycle in seconds

	Dishwasher Mode		Pot/Pan Mode	
Wash	35	65	214	334
Rinse	10	10	15	15
Sanitary Dwell	15	15	11	11
Vent Fan	10	10	10	10
Total cycle	70	100	250	370

'USGBC' and related logo is a trademark owned by the U.S. Green Building Council and is used by permission.
Due to an ongoing value analysis program at Champion, specifications contained in this catalog are subject to change without notice.

Champion Industries, Inc., 3765 Champion Blvd., NC 27105 • 336/661-1556 • Fax: 336/661-1979 • www.championindustries.com
Champion Industries, Inc. www.championindustries.com/canada • sales@moyerdiebellimited.com
2674 N. Service Road, Jordan Station, Ontario, Canada L0R 1S0 • 800/263-5798 • Fax: 905/562-4618

Pro/Line Marketing,Inc.

GENESIS HOOD-TYPE

GENESIS

DH5000T High Temperature Hood-type
Dishwashing Machine

Champion®
The Dishwashing Machine Specialists

Shipping weight crated: 350 lbs.

Dimensions shown in inches and [mm]

VENTLESS/HEAT RECOVERY/CONDENSATE REMOVAL OPTION

Removes heat and water vapor at the end of the cycle while recovering the normally exhausted heat and transferring it to the booster. No vent hood required.

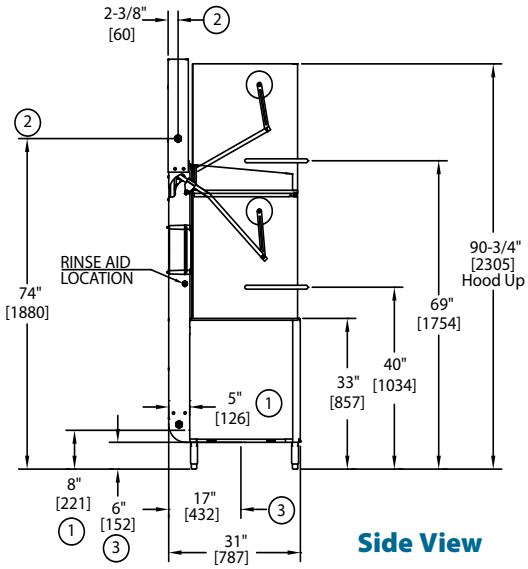

Side View

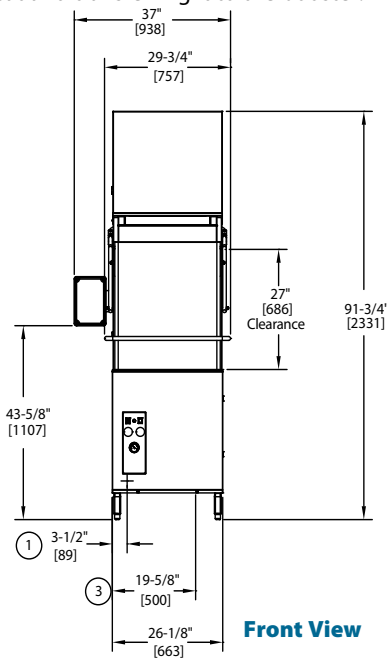

Front View

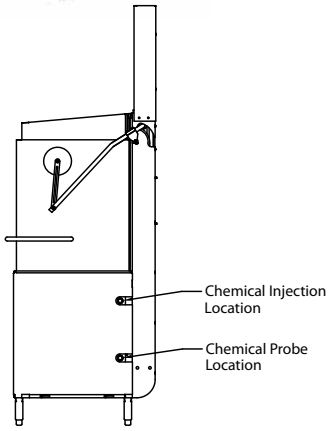

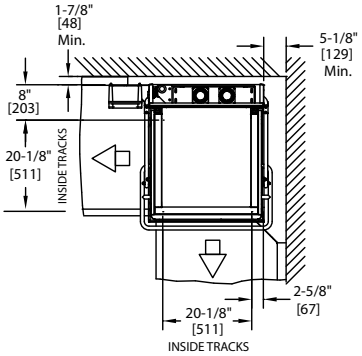

Plan View

For standard machine dimensions see DH5000 drawing

Utilities

1	**Electrical** Machine Connection (See Electrical Box)
2	**Cold Water** 3/4" NPT Cold Water 70°F [21°C] 40 - 45 PSI (machine operates at 20 - 22)
3	**Drain** 2" [51mm] OD Machine Drain Connection 15 GPM max flow

Warning: Plumbing, electrical connections should be made by qualified personnel who will observe all the applicable plumbing, sanitary and safety codes and the National Electrical Code.

Electric 70° Rise Booster			
Voltage	Rated Amps	Minimum Supply Ckt. Conductor Ampacity	Maximum Overcurrent Protective Device
208-240/60/1	83-95	125	125
208-240/60/3	49-56	60	60
460-480/60/3	23-24	30	30

SPECIFICATIONS

Capacities

Racks per hr.	37
Wash tank (gal.)	9.5
[liters/imp gal.]	[36/7.9]

Motor horsepower 2 HP

Water consumption

Gal. per hr. (max. use)	32
[liters/imp gal.]	[121/26.6]
Gal. per rack (dishwasher)	0.85
[liters/imp gal.]	[3.2/0.7]
Gal. per rack (pot & pan washer)	1.18
[liters/imp gal.]	[4.5/0.98]

Temperature °F

Wash	150/66
Rinse	180/82

Heating

Tank heat, electric	5.2 kW
Electric Booster	10 kW

Time cycle in seconds

	Dishwasher Mode		Pot/Pan Mode	
Wash	35	65	214	334
Rinse	10	10	15	15
Sanitary Dwell	15	15	11	11
Vent Fan	30	30	30	30
Total cycle	90	120	270	390

'USGBC' and related logo is a trademark owned by the U.S. Green Building Council and is used by permission.
Due to an ongoing value analysis program at Champion, specifications contained in this catalog are subject to change without notice.

Champion Industries, Inc., 3765 Champion Blvd., NC 27105 • 336/661-1556 • Fax: 336/661-1979 • www.championindustries.com
Champion Industries, Inc. www.championindustries.com/canada • sales@moyerdiebellimited.com
2674 N. Service Road, Jordan Station, Ontario, Canada L0R 1S0 • 800/263-5798 • Fax: 905/562-4618

Pro/Line Marketing,Inc.

Commercial Kitchen Equipment Parts

Find more Champion equipment resources at

parthubz.com/equipment/champion

Need parts or service?

Call 833-700-8006

support@parthubz.com

parthubz.com