Commercial Kitchen Equipment Parts

CHAMPION UH-100B

Champion UH-100B User Manual

Provided by PartHubz

parthubz.com

833-700-8006 | support@parthubz.com

Champion®

Installation/Operation Manual with Service Replacement Parts

UH-200B

UH-170B

UH-100B

Undercounter High Temperature Dishwashers

Models:

UH-200B **UH-100B**
UH-200 **UH-100**
UH-170B **UL-100**
UH-170

Machine Serial No.

Issue Date: 8.1.14

Manual P/N *0512241 rev. M*

For machines beginning with S/N W11948 and above

3765 Champion Blvd.,
Winston-Salem, NC 27105
336/661-1556 Fax: 336/661-1660
Toll-free: 800.858.4477

2674 N. Service Road, Jordan Station
Ontario, Canada L0R 1S0
905/562-4195 Fax: 905/562-4618
Toll-free: 800.263.5798

Printed in the USA

For future reference, record your dishwasher information in the box below.

Model Number_____ Serial Number_____

Voltage_____Hertz_____ Phase_____

Service Agent _____ Tel:_____

Parts Distributor _____ Tel:_____

National Service Department

In Canada:
Toll-free: 800/ 263-5798
Tel: 905/ 562-4195
Fax: 905/ 562-4618
email: service@moyerdiebellimited.com

In the USA:
Toll-free: 800/ 858-4477
Tel: 336/ 661-1556
Fax: 336/ 661-1660
email: service@championindustries.com

ATTENTION:

The model no., serial no., voltage, Hz and phase are needed to identify your machine and to answer questions.

The machine data plate is located on the lower front panel.

Please have this information ready if you call for service assistance.

The USGBC and the CaGBC Member Logos are trademarks owned by the U.S. Green Building Council and The Canadian Green Building Council, respectively, and are used by permission. The logos signify only that Champion is a USGBC member and a CaGBC member; USGBC and CaGBC do not review, certify nor endorse the products or services offered by its members.

COPYRIGHT © 2012 All rights reserved Printed in the USA

REGISTER YOUR PRODUCT ONLINE

Make sure you are connected to the internet then enter the address below.

In the U.S.A

http://www.championindustries.com/register

In Canada

http://www.championindustries.com/canada/register

Champion®

The Dishwashing Machine Specialists

PRODUCT REGISTRATION BY FAX

COMPLETE THIS FORM AND FAX TO:

(336) 661-1660 in the USA

1-(800) 204-0109 in Canada

PRODUCT REGISTRATION CARD

Model	Serial #

Date of Installation: ___/___ /____

Company Name: _____

Address: _____ _____ _____
(Street) Province Postal Code

Telephone #: ( ) _____ --- _____

Contact: _____

Installation Company: _____

Address: _____

Telephone #: _____

Contact: _____

FAILURE TO REGISTER YOUR PRODUCT MAY VOID YOUR WARRANTY

IMPORTANT IMPORTANT

Revision History

A revision might be a part number change, a new instruction, or other information that was not available at print time. We reserve the right to make changes to these instructions without notice and without incurring any liability by making the changes. Equipment owners may request a revised manual, at no charge, by calling 1 (800) 858-4477 in the USA or by calling 1 (800) 263-5798 in Canada.

Revision Date	Revised Pages	Serial Number Effectivity	Revision Description
6.10.09	All	W11948	Released Second Edition
8.13.09	46-47	W11948	Added thermostat adapter to booster
10.5.09	31-32	W11948	Changed P/N 107369 from 107369 to 112518
2.15.10	33	W11948	Added high limit notes to Poor Washing Results in Troubleshooting Chart
8.6.10	73	W11948	Added Item 5 to Parts List
12.30.10	7 47 61 62 76-77	W11948	Corrected 120°F to 140°F Item 16 changed to 0512297 Item 13 changed to 0512129 Corrected numbering Deleted item 2, corrected nos.
3.15.11	36 64	All All	Added motor fan cover P/N Added adapter P/N 0512794
6.7.12	38-39 60-61 70-75 70-71	All All All All	Fixed balloon errors in drawing Change Item 3 to P/N H35509-1 Corrected P/N's for Panel Facias and Label Facias Added wiring harness to P/N's
8.1.14	38-39	All	Changed Item 7 wash tank thermostat to P/N 05073232

LIMITED WARRANTY

Champion Industries Inc. (herein referred to as Champion), 3765 Champion Blvd., Winston-Salem, North Carolina 27105, and P.O. Box 301, 2674 N. Service Road, Jordan Station, Canada, L0R 1S0, warrants machines, and parts, as set out below.

Warranty of Machines: Champion warrants all new machines of its manufacture bearing the name "Champion" and installed within the United States and Canada to be free from defects in material and workman ship for a period of one (1) year after the date of installation or fifteen (15) months after the date of shipment by Champion, whichever occurs first. [See below for special provisions relating to glasswashers.] The warranty registration card must be returned to Champion within ten (10) days after installation. If warranty card is not returned to Champion within such period, the warranty will expire after one year from the date of shipment.

Champion will not assume any responsibility for extra costs for installation in any area where there are jurisdictional problems with local trades or unions.

If a defect in workmanship or material is found to exist within the warranty period, Champion, at its election, will either repair or replace the defective machine or accept return of the machine for full credit; provided; however, as to glasswashers, Champion's obligation with respect to labor associated with any repairs shall end (a) 120 days after shipment, or (b) 90 days after installation, whichever occurs first. In the event that Champion elects to repair, the labor and work to be performed in connection with the warranty shall be done during regular working hours by a Champion authorized service technician. Defective parts become the property of Champion. Use of replacement parts not authorized by Champion will relieve Champion of all further liability in connection with its warranty. In no event will Champion's warranty obligation exceed Champion's charge for the machine. The following are not covered by Champion's warranty:

a. Lighting of gas pilots or burners.
b. Cleaning of gas lines.
c. Replacement of fuses or resetting of overload breakers.
d. Adjustment of thermostats.
e. Adjustment of clutches.
f. Opening or closing of utility supply valves or switching of electrical supply current.
g. Cleaning of valves, strainers, screens, nozzles, or spray pipes.
h. Performance of regular maintenance and cleaning as outlined in operator’s guide.
i. Damages resulting from water conditions, accidents, alterations, improper use, abuse, tampering, improper installation, or failure to follow maintenance and operation procedures.
j. Wear on Pulper cutter blocks, pulse vanes, and auger brush.

Examples of the defects not covered by warranty include, but are not limited to: (1) Damage to the exterior or interior finish as a result of the above, (2) Use with utility service other than that designated on the rating plate, (3) Improper connection to utility service, (4) Inadequate or excessive water pressure, (5) Corrosion from chemicals dispensed in excess of recommended concentrations, (6) Failure of electrical components due to connection of chemical dispensing equipment installed by others, (7) Leaks or damage resulting from such leaks caused by the installer, including those at machine table connections or by connection of chemical dispensing equipment installed by others, (8) Failure to comply with local building codes, (9) Damage caused by labor dispute.

Warranty of Parts: Champion warrants all new machine parts produced or authorized by Champion to be free from defects in material and workmanship for a period of 90 days from date of invoice. If any defect in material and workmanship is found to exist within the warranty period Champion will replace the defective part without charge.

DISCLAIMER OF WARRANTIES AND LIMITATIONS OF LIABILITY. CHAMPION'S WARRANTY IS ONLY TO THE EXTENT REFLECTED ABOVE. CHAMPION MAKES NO OTHER WARRANTIES, EXPRESS OR IMPLIED, INCLUDING, BUT NOT LIMITED, TO ANY WARRANTY OF MERCHANTABILITY, OR FITNESS OF PURPOSE. CHAMPION SHALL NOT BE LIABLE FOR INCIDENTAL OR CONSEQUENTIAL DAMAGES. THE REMEDIES SET OUT ABOVE ARE THE EXCLUSIVE REMEDIES FOR ANY DEFECTS FOUND TO EXIST IN CHAMPION DISHWASHING MACHINES AND CHAMPION PARTS, AND ALL OTHER REMEDIES ARE EXCLUDED, INCLUDING ANY LIABILITY FOR INCIDENTALS OR CONSEQUENTIAL DAMAGES.

Champion does not authorize any other person, including persons who deal in Champion dishwashing machines to change this warranty or create any other obligation in connection with Champion Dishwashing Machines.

Table of Contents

UH-series Undercounter Dishwashers

Revision History ..... *i*
Limited Warranty ..... *ii*
Model Descriptions ..... *iv*

Installation *1*

Receiving *1*
Electrical Connections *2*
Water Connections *7*
Drain Connections *8*

Initial Start-up *17*

Check List *9*
Booster Fill Switch *10*
Chemical Dispensing Pumps *12*
Priming *16*
Adjustments *18*

Operation *19*

Cleaning and Maintenance *28*

Cleaning *28*
Maintenance *32*
Troubleshooting *33*

Service Replacement Parts *35*

Electrical Schematics *83*

Basic Service *93*

Model Descriptions

UH-200B, UH-170B, UH-100B
High temperature hot water sanitizing dishwasher with built-in 40°F/22°C rise booster heater.
Field convertible from single phase to three phase operation.
Digital display (UH-200B only)
208-240VAC/60/1 and 3 phase

UH-200, UH-170, UH-100
High temperature hot water sanitizing dishwasher without built-in booster heater.
120VAC/60/1

UL-100
Low temperature chemical sanitizing dishwasher.
120VAC/60/1

Optional Equipment *(consult factory)*

70°F/39°C rise built-in booster heater (UH-200B, and UH170B Only)

70°F/39°C rise booster heater element-P/N 111233, Gasket- P/N 109985

1-RDT Right-hand sink - P/N 403562

1-RDT Left-hand sink - P/N 403561

17" Stand - P/N 0708757

17" Storage cabinet - P/N 0703593

6" Stand - P/N 0712393

Peg dish rack - P/N 101285

Flat-bottom dish rack - P/N 101273

Drain water tempering kit - 0712382

Receiving

NOTE:
The installation of your dishwasher must be performed by qualified service personnel. Problems due to improper installation are not covered by the Warranty.

1. Inspect the outside of the dishwasher carton for signs of damage.
2. Remove the carton and inspect the dishwasher for damage.
3. Check for any accessories that may have shipped with your dishwasher.
4. Turn to the front of this manual and complete the warranty card. Immediately mail the warranty card to validate your warranty.
5. Move the dishwasher near its permanent location.

CAUTION:
Be careful when lifting and moving the dishwasher to prevent damage to the machine.

NOTE:
The installation of the dishwasher must comply with all local electrical, plumbing, health and safety codes or in the absence of local codes, installed in accordance with the applicable requirements in the National Electrical Code, NFPA 70, Canadian Electrical Code (CEC), Part 1, CSA C22.1; and the Standard for Ventilation Control and Fire Protection of Commercial Cooking Operations, NFPA 96.

6. Compare the installation site utility connections with the dishwasher utility connections and make sure they are the same.
7. The dishwasher can be installed as a free-standing unit or under a built-in counter-top. The typical counter-top height in most locations is 34" [86cm].
8. Under counter installations should provide storage space for the dishwasher chemical supply containers. Do not elevate the containers.
9. Chemical supply containers should be placed as close as close to the machine as possible.
10. Place the dishwasher in its permanent location.
11. The dishwasher has 4 adjustable feet for leveling.
12. Level the dishwasher front-to-back and side-to-side.

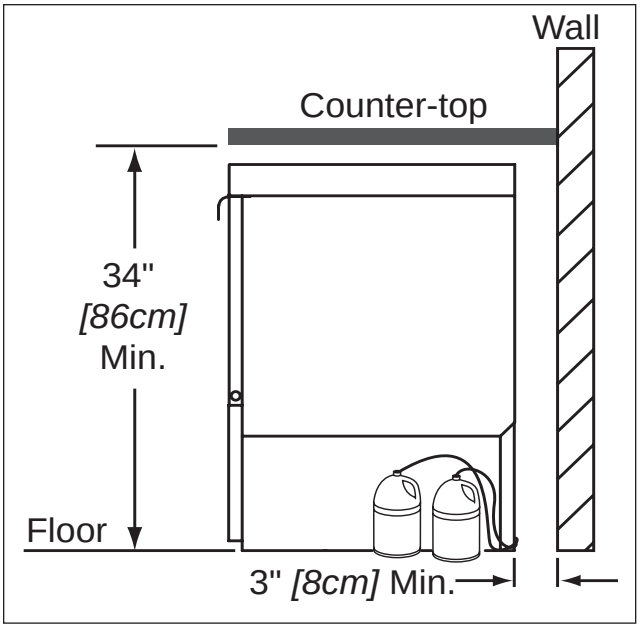

Electrical Connections

For dishwashers built prior to S/N 14326

WARNING:

Electrocution or serious injury may result when working on an energized circuit.

Disconnect power at the main breaker or service disconnect switch before working on the circuit.

Lock-out and tag the breaker to indicate that work is being performed on the circuit.

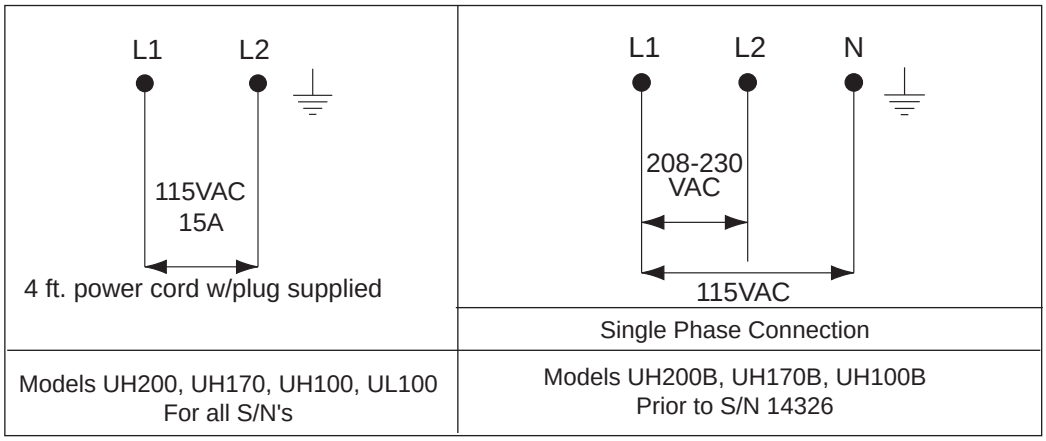

1. Refer to the connection diagrams above.
2. Models UH200, UH170,UH100, and UL100 are equipped with a 4 ft. power cord/plug. They only require a 115VAC,15A receptacle.
3. Models UH200B, UH170B, and UH100B <u>1 PH</u> machines require a 3-wire plus ground supply which includes a current carrying neutral.
4. Models UH200B, UH170B, and UH100B <u>3 PH</u> machines require a 4-wire plus ground supply which includes a current carrying neutral.
5. Power connections are made at the Main Terminal Block (MTB) which is located at the lower right-hand side of the dishwasher directly behind the lower front access panel.
6. Remove the MTB cover and 2 screws holding the MTB to the machine base. Pull the MTB up and forward to make the electrical connections.
7. Provide a 3 ft. service loop in the supply cable for machine servicing.
8. Re-install the MTB and the lower front access panel to complete the installation.

Main Terminal Block (MTB)
(shown extended from machine)

Electrical Connections

For Model UH200B, UH170B, UH100B dishwashers beginning with S/N 14326 and above

WARNING:

Electrocution or serious injury may result when working on an energized circuit.

Disconnect power at the main breaker or service disconnect switch before working on the circuit.

Lock-out and tag the breaker to indicate that work is being performed on the circuit.

ATTENTION

A qualified electrician must connect the main incoming power to the dishwasher in accordance with all local codes and regulations or in the absence of local codes in accordance with the National Electrical Code.

Note

Models UH200, UH170, UH100, and UL100 are equipped with a 4 ft. power cord and plug. These models require a 115VAC,15A receptacle.

Main Terminal Block (MTB)
(shown extended from machine)

1. Power connections are made at the Main Terminal Block (MTB) which is located at the lower right-hand side of the dishwasher directly behind the lower front access panel
2. Remove the MTB cover and 2 screws holding the MTB to the machine base. Then, pull the MTB up and forward to make the electrical connections.
3. Provide a 3 ft. service loop in the supply cable for machine servicing.
4. Re-install the MTB and the lower front access panel to complete the installation.
5. Refer to the connection diagrams on the next page for wiring instructions.

Electrical Connections (continued)

For Models UH200B,UH170B, and UH100B beginning with S/N 14326 and above

Refer to the connection diagrams below to connect main incoming power to the dishwasher.

THREE PHASE POWER CONNECTION
Model UH200B, UH170B and UH100B

(For machines beginning with S/N 14326 and above)

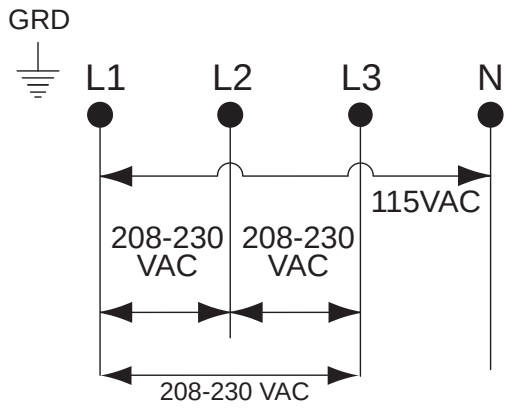

HOW TO CONNECT 3 PHASE POWER

1. Check the data plate on the front of the dishwasher for the phase of the machine.

If the data plate says the machine is 3 Phase, then connect a 3 PH power supply.

2. Remove the lower access panel.
3. Pull power connection box forward and out.
4. The Main Terminal Block has terminals for L1, L2, L3, Neutral and Ground.
5. Connect ground, then connect L1, L2, L3 to 208-230VAC.
6. Connect a current carrying neutral to N.
7. Main power connections are complete.

SINGLE PHASE POWER CONNECTION
Model UH200B, UH170B and UH100B

(For machines beginning with S/N 14326 and above)

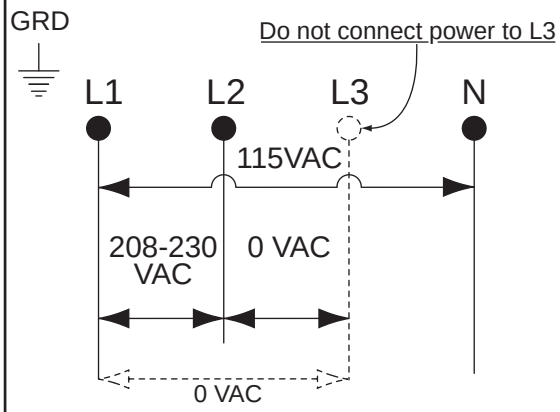

HOW TO CONNECT 1 PHASE POWER

1. Check the data plate on the front of the dishwasher for the phase of the machine.

If the data plate says the machine is 1 Phase, then connect a 1 PH power supply.

2. Remove the lower access panel.
3. Pull power connection box forward and out.
4. The Main Terminal Block has connections for L1, L2, L3, Neutral and Ground.
5. Connect ground, then connect L1, L2 to 208-230VAC.
6. Connect a current carrying neutral to N.

DO NOT CONNECT POWER TO L3.

7. Main Power connections are complete.

Electrical Connections (continued)

For Model UH200B, UH170B, UH100B dishwashers beginning with S/N 14326 and above.

WARNING:

Electrocution or serious injury may result when working on an energized circuit.

Disconnect power at the main breaker or service disconnect switch before working on the circuit.

Lock-out and tag the breaker to indicate that work is being performed on the circuit.

Booster Heater Element
Field Conversion from Single to Three Phase Operation

Dishwashers shipped from the factory wired for 1 phase operation can be changed to 3 phase operation by following the procedure below.

1. Disconnect the main incoming power at the main service disconnect breaker or switch.
2. Remove the lower front access panel,
3. Remove the booster heater element cover.
4. Locate the 1H3 booster heater wire stored on the right-side of the booster tank.
5. Disconnect the existing booster heater wires and change the booster heater element jumpers as shown in the illustration below
6. Connect wires 1H1, 1H2, and 1H3 as shown.
7. Re-install the booster heater cover.
8. A replacement 3PH data plate is stowed on the back of the lower front access panel. Remove the existing 1PH data plate on the front of the panel with the new 3PH data plate. Discard the 1PH data plate.
9. Contact a qualified electrician to change the incoming service power to 3PH. An illustration of the power connections on the Main Terminal Block is on the next page.

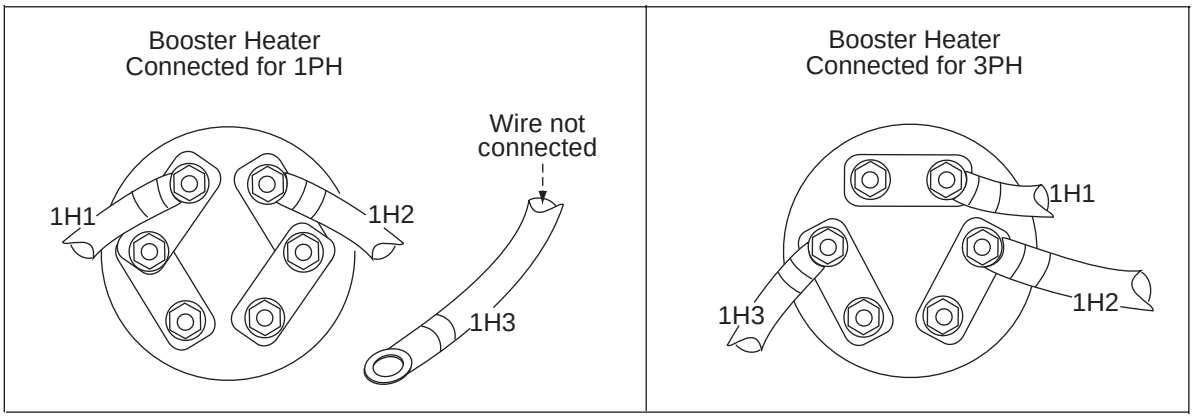

Booster heater element connections shown for 1 phase and 3 phase operation.

Electrical Connections (continued)

For Model UH200B, UH170B, UH100B dishwashers beginning with S/N 14326 and above.

Booster Heater Element
Field Conversion from Single to Three Phase Operation *(continued)*

ATTENTION ELECTRICIAN:

The Main Terminal Block (MTB) is a 4-wire connection block which includes a current-carrying neutral. The block can be connected for 3PH or 1PH depending on how the booster heater is wired (see the previous page). Refer to the diagram to the left and connect the main incoming electric service accordingly. The data plate on the lower front cover of the dishwasher provides the correct power requirements.

Contact the local authorized service agent if there are any questions concerning the proper power connections.

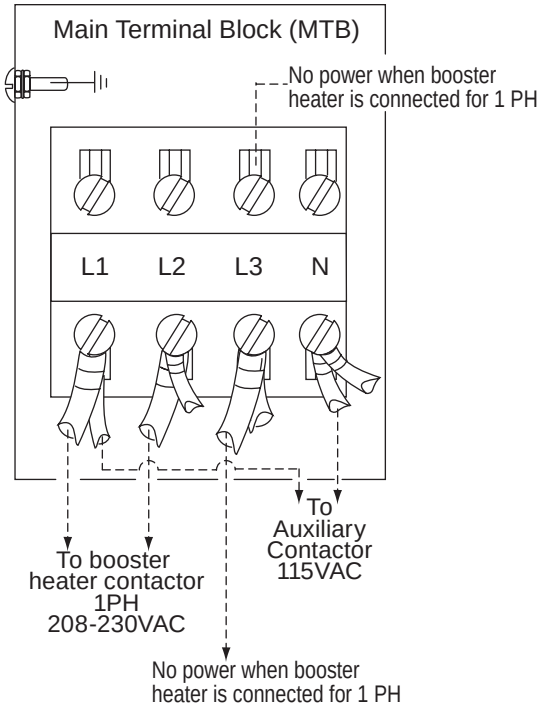

Booster Heater/Wash Tank Heater Interlock Circuit

For Model UH200B, UH170B, UH100B dishwashers beginning with S/N 14326 and above.

The booster heater/wash tank heater interlock circuit removes power from the wash tank heater whenever the booster heater contactor energizes. The illustration below shows how the booster heater contactor is wired. The booster heater contactor is located behind the lower front access panel.

Interlock Circuit Operation

1. The dishwasher fills with water when the main power switch on the dishwasher is turned on. The booster heater thermostat calls for heat which energizes the booster heater contactor.
2. The auxiliary contact on the top of the contactor opens and removes power from the wash tank heater.
3. When the booster heater thermostat is satisfied, the booster heater contactor de-energizes and the auxiliary contacts close applying power to the wash tank heater.
4. This operation is repeated whenever the booster thermostat calls for heat.

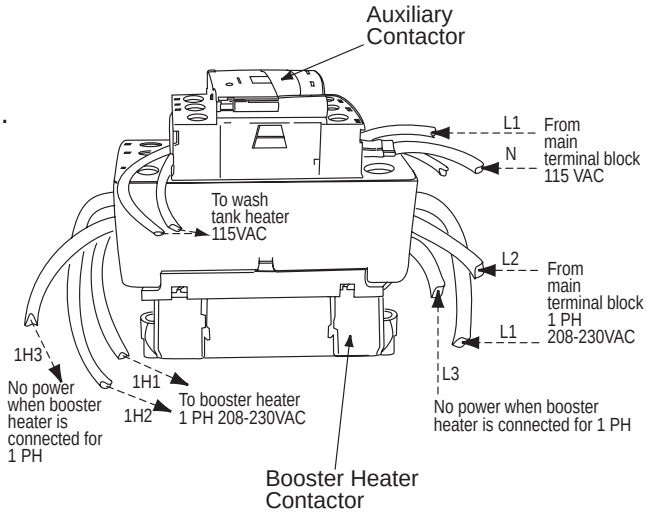

Water Connections

UH200B, UH200, UH170B, UH170, UH100B, UH100, UL100

NOTE
Plumbing connections must comply with national, local plumbing and sanitary codes.

IMPORTANT
Make sure that the flexible water supply and drain hoses are not kinked.

UH200B, UH170B and UH100B

1. All models have a 6 ft. flexible hot water fill hose with a 3/4" female garden hose connector.
2. A 1/2" or larger main incoming supply line should be installed to the dishwasher.
3. A 1/2" or larger shut-off valve should be installed in the water supply line as close to the dishwasher for service.
4. For UH200B/UH170B only, a pressure regulating valve, PRV, (supplied by others) must be installed after the shut-off service valve if the incoming flow pressure exceeds 20-22 psi/138-152 kPa.
5. The hot water supply must provide a minimum of 140°F/60°C, measured at the dishwasher for the 40°F/ 22°C rise booster. For the 70°F/39°C rise booster the hot water supply must provide a minimum of 110°F/43°C measured at the dishwasher.
6. A water hardness of 3 grains/gal (US) [51.3 mg/L] or less is recommended.

UH170, UH100, and UL100

1. All models have a 6ft flexible hot water fill hose with a 3/4" female garden hose connector.
2. A 1/2" or larger main incoming supply line should be installed to the dishwasher.
3. A 1/2" or larger shut-off valve should be installed in the main water supply as close to the dishwasher as possible for service.
4. All models have a built-in flow control. The incoming hot water supply pressure must be between 25-95 psi/173-655 kPa.
5. For Models UH170, and UH100, the hot water supply must provide a minimum of 140°F/60°C, measured at the dishwasher for The incoming hot water supply line must be a 1/2" or larger.
6. For the Model UL100, the hot water supply must provide a minimum of 140°F/60°C, measured at the dishwasher.
7. A water hardness of 3 grains/gal (US) [51.3 mg/L] or less is recommended.

Drain Connections

UH200B, UH200, UH170B, UH170, UH100B, UH100, UL100

ATTENTION
Do not connect the drain hose to a disposer. The dishwasher will not drain correctly.

NOTE
The dishwasher drains in 8 seconds and drain water exits the hose with considerable force.

1. All models have a 6ft. 5/8" I.D. drain hose. The maximum drain height connection must not exceed 3 ft.[0.9 m].
2. The drain hose is located at the rear of the dishwasher. A 5/8" hose-barb fitting is strapped to the drain hose to the hose drain piping.
3. The drain hose is secured to the rear of the machine by a clamp to maintain a goose-neck bend in the drain hose.

   DO NOT REMOVE THE DRAIN HOSE RETAINING CLAMP.
   DO NOT STRETCH THE DRAIN HOSE.

4. Install the drain hose to a "WYE" drain fitting. Connection to a "TEE" fitting will prevent the dishwasher from draining completely.
5. The maximum drain flow is 15 US gpm.
6. Make sure the drain hose does not kink. Kinks will prevent the dishwasher from draining completely, and the dishwasher will overflow out the front door.

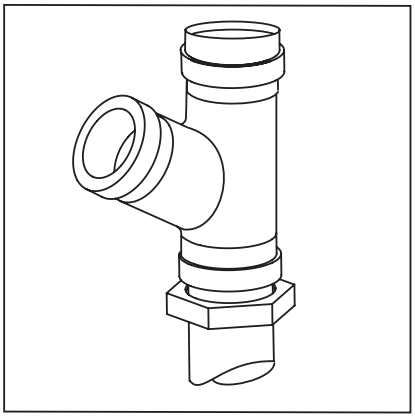

The dishwasher flexible drain hose must be connected to a WYE fitting.

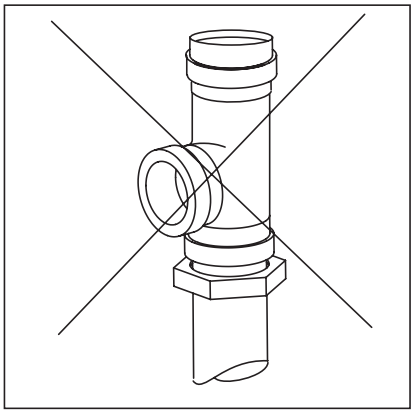

Do not connect the dishwasher flexible drain hose to a TEE fitting.

Check List

UH200B, UH170B, UH100B, UH200, UH170, UH100, UL100

1. Remove any protective film from dishwasher. Check the interior for foreign material.
2. Make sure the dishwasher is permanently located.
3. Make sure all utility connections are complete.
4. Make sure the flexible drain hose and the hot water fill hose are not kinked.
5. Make sure the chemical supply containers are full and the chemical pick-up tubes are installed in the proper containers.
6. Make sure the scrap screen is in place.

For Models UH200B, UH200, UH170B, and UH170 only:
Make sure the overflow guard is in place.

7. Make sure the spray arms are in place and that they spin freely.
8. Fully close the dishwasher door.
9. Turn hot water supply on and check for leaks in the main water supply piping connected to the dishwasher.

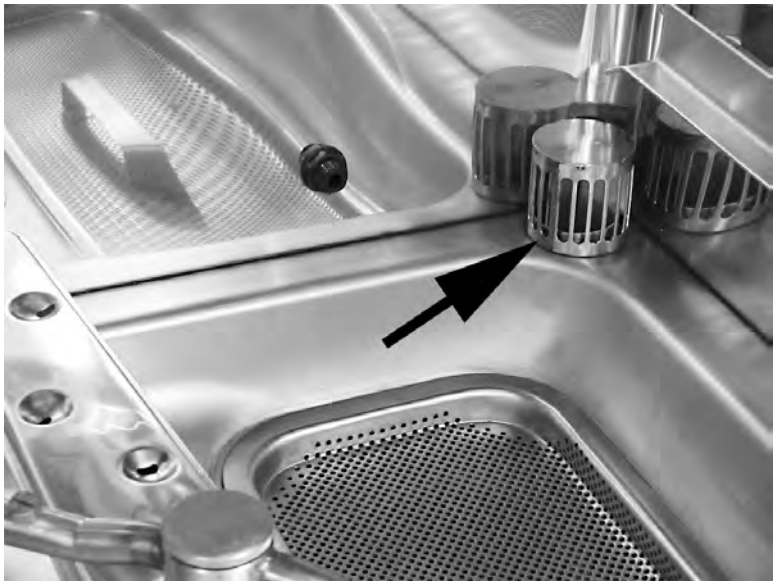

For Models UH200B, UH200, UH170B, and UH170B only:
Make sure the overflow guard is in place.

Make sure the scrap screen is in place.

Filling the Booster

Models: UH200B, UH170B, and UH100B only

Note:
Models UH200B, UH170B and UH100B have a built-in booster heater that was drained prior to shipment and must be filled before operating the dishwasher.

Booster Fill Switch

The booster heater is refilled using the Booster Fill Switch. It is located behind the lower front access panel and on the left-side of the bracket that holds the chemical dispensing pumps (see the photos below).

To refill the booster heater:

1. Remove the lower front access panel.

2. Locate the booster fill switch and note the 3 switch positions (Fill - OFF - ON).

3. Turn the main power supply on.

   DO NOT TURN THE DISHWASHER POWER SWITCH ON.

4. Follow the steps below to fill the booster heater prior to operating the dishwasher.

A. Locate the Booster Fill Switch that is located behind the lower-front access.

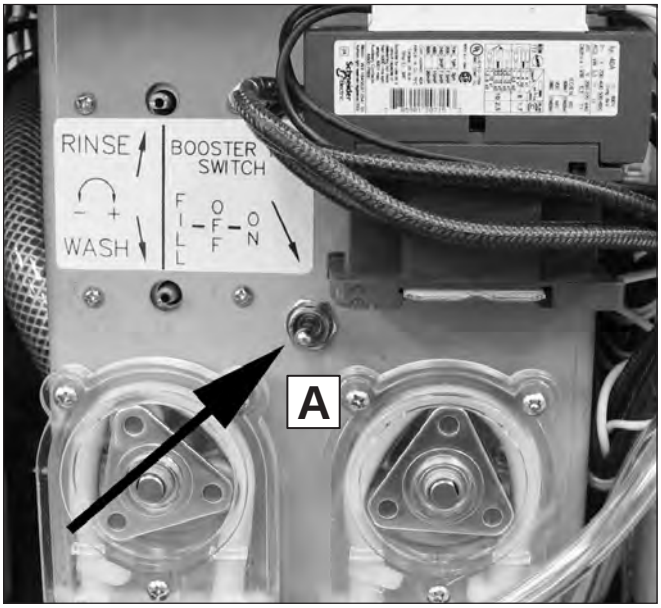

The Booster Fill Switch is located on the front center bracket behind the lower-front access panel

Initial Start-Up

Models: UH200B, UH170B, and UH100B only

Booster Fill Switch *(continued)*

B. Press and hold the Booster Fill Switch to the FILL POSITION until you hear the water spraying inside the dishwasher.

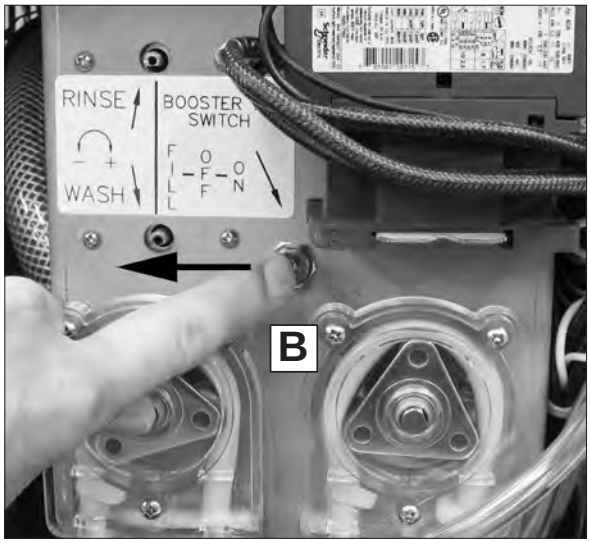

Push and hold the Booster Fill Switch to the right to refill the booster heater with water.

C. Release the switch, then flip the switch fully right to the ON position.
The booster tank is refilled and the dishwasher is ready for normal operation.

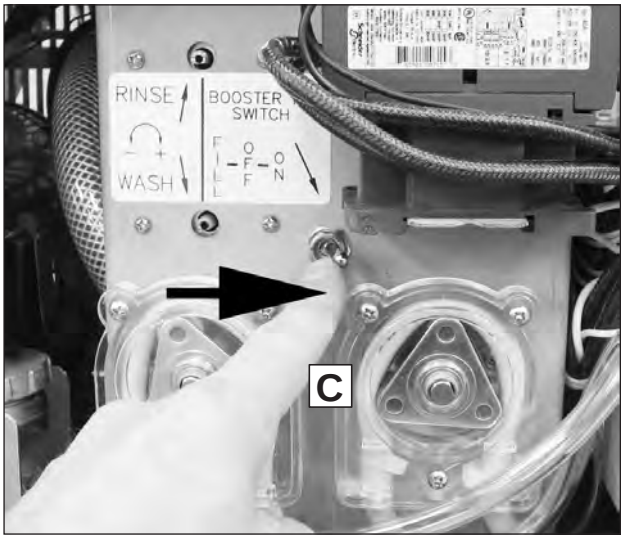

Booster Fill Switch shown in the ON.
Dishwasher is ready for normal operation.

Chemical Dispensing Pumps

Models UH200B, UH200, UH170B, and UH170 Hot Water Sanitization Dishwashers.

ATTENTION

Contact a local chemical supplier for detergent and rinse-aid chemicals. The detergent should be a non-chlorinated liquid detergent. The chemical dispensing pumps are adjusted by the chemical supplier.

Models UH200B, UH200, UH170B, and UH170 Hot Water Sanitization:

1. Models UH200B, UH200, UH170B, UH170 are equipped with a built-in detergent dispensing pump and rinse-aid dispensing pump. *(See the photographs below.)*
2. The pumps are located on a center bracket behind the lower-front access panel.
3. Each pump is equipped with 6 feet [1.8 m] of pick-up supply tubing, a stiffener tube, and a strainer.
4. A red label marked DETERGENT is attached to the detergent pump inlet tubing.
5. A blue label marked RINSE-AID is attached to the rinse-aid pump inlet tubing.
6. The detergent enters the wash tank compartment through a fitting at the right rear of the wash compartment.
7. The detergent supply should be a non-chlorinated liquid detergent.

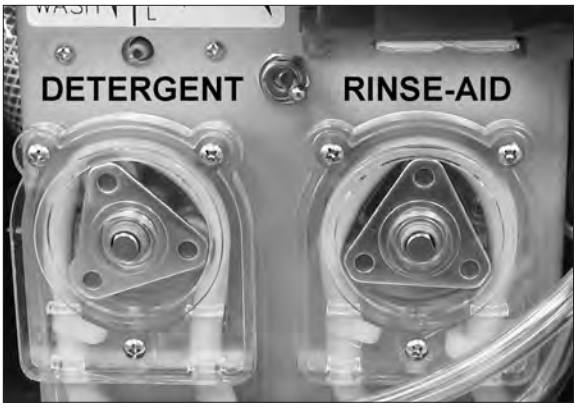

For Models UH200B, UH200, UH170B and UH170, the dispensing pumps are located on the center bracket behind the lower-front access panel.

A stiffener tube, strainer and 6 ft. [1.8 m] of pick-up tubing are supplied with the built-in detergent and rinse-aid pumps.

Chemical Dispensing Pumps

Models UH200B, UH200, UH170B, and UH170 Hot Water Sanitization Dishwashers.

Models UH200B, UH200, UH170B, and UH170 Hot Water Sanitization *(continued)*

8. The rinse-aid enters the final rinse piping through a fitting located on the upper-left rear side of the dishwasher. The fitting is located near the vacuum breaker.
9. The chemical supplier will choose the appropriate liquid rinse-aid.
10. Your chemical supplier should adjust the dispensers for the supplied product.
11. Place the chemical supply containers as close to the dishwasher as possible.
12. Do not elevate the chemical containers above the finished floor.

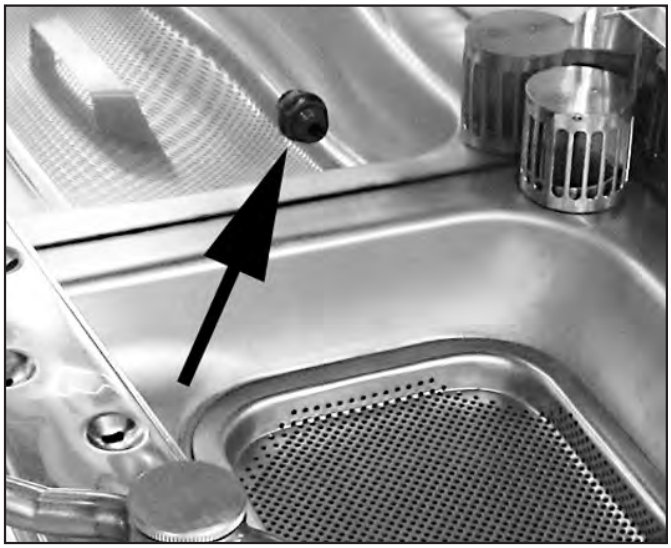

For Models UH200B, UH200, UH170B, and UH170, detergent enters the wash tank compartment through a fitting on the rear wall of the wash tank compartment.

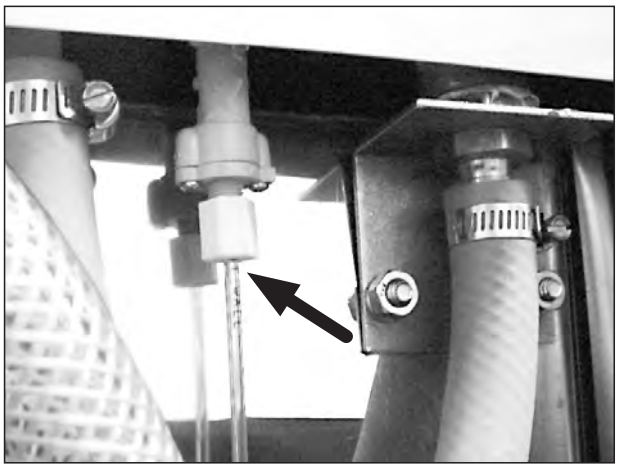

The rinse-aid enters the final rinse piping at the rear of the dishwasher near the vacuum breaker.

Chemical Dispensing Pumps

Models UH100B, UH100 Hot Water Sanitization Dishwashers

Models UH100B, UH100 Hot Water Sanitization:

1. Models UH100B, UH100 are equipped with a built-in detergent dispensing pump and rinse-aid dispensing pump. *(See the photographs below.)*
2. The pumps are located on a center bracket behind the lower-front access panel.
3. Each pump is equipped with 6 feet [1.8 m] of pick-up supply tubing, a stiffener tube, and a strainer.
4. A red label marked DETERGENT is attached to the detergent pump inlet tubing.
5. A blue label marked RINSE-AID is attached to the rinse-aid pump inlet tubing.
6. The chemicals enter the wash tank compartment through a fitting on the right-side of the wash compartment.
7. The detergent supply should be a non-chlorinated liquid detergent, the chemical supplier will determine an appropriate rinse agent. Your chemical supplier should adjust the dispensers for the supplied product.
8. Place the chemical supply containers as close to the dishwasher as possible.
9. Do not elevate the chemical containers above the finished floor.

A stiffener tube, strainer and 6 ft. [1.8 m] of pick-up tubing are supplied with the UH100B and UH100 built-in detergent and rinse-aid pump.

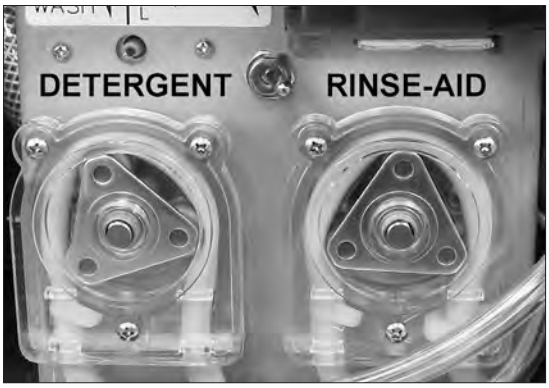

For Models UH100B and UH100, the dispensing pumps are located on the center bracket behind the lower-front access panel.

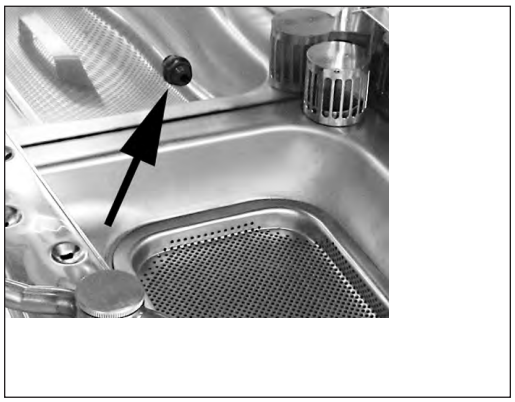

For Models UH100B and UH100, chemicals enter the wash tank compartment through a fitting on the right-side of the wash compartment.

Chemical Dispensing Pumps

Model UL100 Low Temperature Chemical Sanitization Dishwasher

ATTENTION

Contact a local chemical supplier for detergent, rinse-aid and sanitizer. The detergent should be a non-chlorinated liquid detergent. The chemical dispensing pumps are adjusted by the chemical supplier.

IMPORTANT

5.25% sodium hypochlorite *(chlorine beach) must be used as a sanitizing agent to provide a minimum concentration of 50 ppm in the final rinse. The 50 ppm concentration must be checked using chlorine test strips to make sure that the proper concentration is maintained.*

Model UL100 Low Temperature Chemical Sanitization Dishwasher

1. The Model UL100 is equipped with a built-in detergent dispensing pump, rinse-aid dispensing pump, and a sanitizer dispensing pump. *(See the photographs below.)*
2. The pumps are mounted on a bracket located at the lower left-side of the dishwasher behind the lower-front access panel.
3. Each pump is equipped with 6 feet [1.8 m] of pick-up supply tubing, a stiffener tube, and a strainer.
4. A red label marked DETERGENT is attached to the detergent pump inlet tubing.
5. A blue label marked RINSE-AID is attached to the rinse-aid pump inlet tubing.
6. A white label marked SANITIZER is attached to the sanitizer pump inlet tubing.
7. The chemicals enter the wash tank compartment through a fitting on the right-side of the compartment.
8. The detergent supply should be a non-chlorinated liquid detergent, the chemical supplier will determine an appropriate sanitizer and rinse agent. Your chemical supplier should adjust the dispensers for the supplied product.
9. Place the chemical supply containers as close to the dishwasher as possible.
10. Do not elevate the chemical containers above the finished floor.

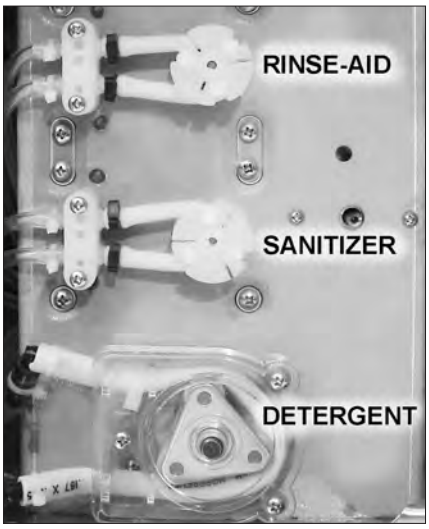

The dispensing pumps are mounted on a bracket located on the lower left-side of the dishwasher behind the lower-front access panel.

A stiffener tube, strainer and 6 ft. [1.8 m] of pick-up tubing are supplied with the UH100B and UH100 built-in detergent pump, rinse-aid pump, and sanitizer pump.

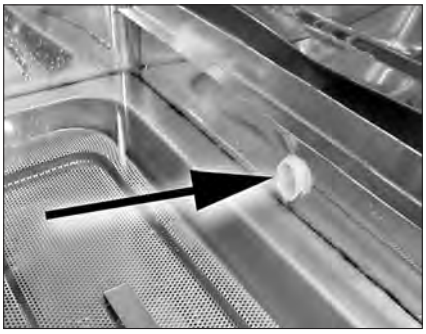

Chemicals enter the wash tank compartment through a fitting on the right-side of the wash compartment.

Chemical Dispensing Pumps

Models UH200B, UH200, UH170B, UH170, UH100B, UH100 and UL100

1. The chemical dispensing pump supply lines must be primed before they will pump the chemicals properly. Refer to the previous page for the location of the chemical injection points for the applicable model.
2. All models feature a 2-position PRIME push button located on the front control panel to prime the chemical dispensing pumps *(see the photographs below)*.

Priming the Chemical Dispensing Pumps

For Models UH200B, UH200, UH170B and UH170

3. Make sure the chemical containers are full and the correct pick-up tubes are in the containers.
4. Turn the dishwasher power switch ON. The switch will illuminate and the dishwasher will fill with water.
5. Open the dishwasher door, then push and hold the prime push button UP to the DET position until detergent is observed entering the wash tank compartment.

UH200B, UH200 Control Panel Prime Button

UH170B, UH170 Control Panel Prime Button

6. Push and hold the prime push button DOWN to the RINSE position until you see air bubbles moving through the rinse-aid tubing. Release the push button.
7. Close the door fully to complete the priming operation.

Push UP and HOLD until the detergent enters the wash tank compartment then release the push button.

Push DOWN and HOLD until you see air bubbles moving through the rinse-aid tubing.

Chemical Dispensing Pumps

Models UH200B, UH200, UH170B, UH170, UH100B, UH100 and UL100

For Models UH100B and UH100

1. Make sure the chemical containers are full and the correct pick-up tubes are in the containers.
2. Turn the dishwasher power switch ON. The switch will illuminate and the dishwasher will fill with water.
3. Open the dishwasher door, then push and hold the prime push button UP to the DET position until detergent is observed entering the wash tank compartment.

UH100B, UH100 Control Panel Prime Push Button

4. Push and hold the prime push button DOWN to the RINSE position rinse-aid enters the wash tank compartment. Release the push button.
5. Close the door fully to complete the priming operation.

For Model UL100

1. Make sure the chemical containers are full and the correct pick-up tubes are in the containers.
2. Turn the dishwasher power switch ON. The switch will illuminate and the dishwasher will fill with water.
3. The Prime push button primes the Sanitizer pump and the Rinse-aid pump. The Detergent pump does not have a prime push button. During normal operation, observe the detergent pick-up tubing to make sure that air bubbles are moving through the tubing which indicates that the detergent is being dispensed.

UL100 Low Temperature Dishwasher Control Panel Prime Push Button

4. Open the dishwasher door, then push and hold the prime push button UP to the SANI position until sanitizer enters the wash tank compartment. Release the PRIME push button.
5. Push and hold the Prime push button DOWN to the RINSE position until rinse-aid is observed entering the wash tank compartment. Release the Prime push button.
6. Close the door fully to complete the priming operation.

Push and Hold the UP until sanitizer enters the wash tank compartment, then release the push button.

Push and Hold the DOWN until rinse-aid enters the wash tank compartment, then release the push button.

Chemical Dispensing Pumps

Models UH200B, UH200, UH170B, UH170, UH100B, UH100 and UL100

Chemical Dispensing Pump Speed and Tank Fill Adjustments

NOTE:
The chemical dispensing pump speeds are not set at the factory. Variations in the type of chemicals supplied by the chemical supplier usually require that the supplier make final adjustments for the products supplied.

1. Adjustment screws are provided for the dispensing pumps and for the wash tank fill. They are located on the right-side of the dishwasher behind the lower front access panel.
2. Make sure the chemical containers are full and the pick-up tubes are in the proper containers.
3. Turn the dishwasher power switch ON.
   The switch will illuminate and the dishwasher will fill with water.
4. Run a normal dishwasher cycle and test detergent and rinse-aid concentrations according to the chemical supplier's instructions.

CAUTION:
Excessive pressure to the potentiometers when adjusting can result in bent or broken adjusting screws.

5. Each dispensing pump has a clearly marked adjustment screw. Turn the screw CW to increase the time of the dispensing pump and CCW to reduce the dispensing pump time.
6. The Fill adjustment screw will provide a small change in the tank water level. If a large adjustment is needed, then check the incoming water pressure make that the fill hose is not kinked. If the above items are okay then the size of the incoming water supply should be evaluated.
7. <u>NOTE:</u>
   For Models UH200B,
   UH200, UH170B, UH170, UH100B and UH100 use detergent and rinse-aid only, a sanitizer is not required.

8. For Model UL100, detergent, rinse-aid and sanitizer are used.
   5.25% sodium hypochlorite *(chlorine beach) must be used as a sanitizing agent to provide a minimum concentration of 50 ppm in the final rinse. The 50 ppm concentration must be checked using chlorine test strips to make sure that the proper concentration is maintained.*

Operation

Models UH200B and UH200

The UH200B and UH200 feature digital temperature displays, and an extended wash mode for hard to clean wares. A Rinse Sentry feature holds the dishwasher in the wash mode if the final rinse water is not hot enough to sanitize the wares.

Follow the instructions below to operate the UH200B and UH200 dishwashers in the Normal Wash Mode.

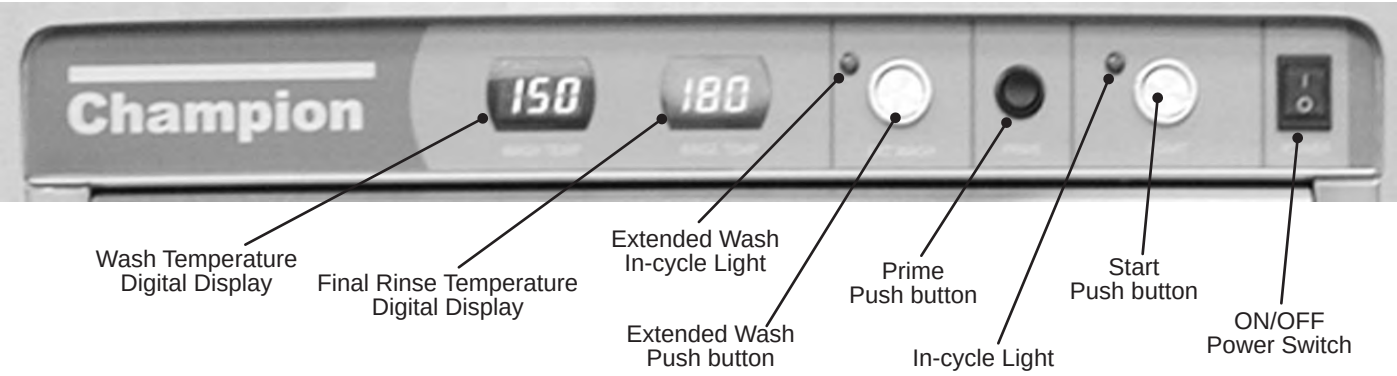

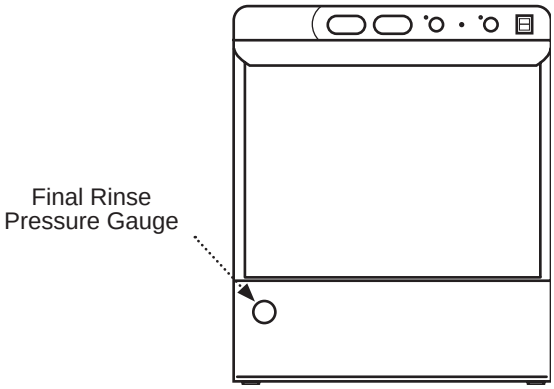

Normal Wash Mode

1. Make sure the flexible drain hose and the flexible fill hose are not kinked, then turn the water supply on.
2. Fully close the dishwasher front door.
3. Turn the main power on at the main circuit breaker.
4. Push the dishwasher Power Switch UP to turn the dishwasher power ON.
5. The power switch will illuminate and the machine will fill with water.
6. Check the pressure gauge as the machine fills and make sure the incoming water pressure is between 20-22 psi [138-152 kPa]. *(continued on next page)*

Operation
Models UH200B and UH200 (continued)

Normal Wash Mode *(continued from previous page)*

Approximate UH200 and UH200B water fill level.

7. Open the front door and check the water level in the wash tank compartment. The approximate water fill level should reach the top-left edge of the wash tank compartment as shown in the photograph above.
8. Close the door fully.
9. Wait 10 minutes for the booster heater to reach temperature and for the WASH temperature digital display to indicate a minimum of 150ºF/66ºC.
10. Load soiled wares into the dish rack. Place plates, glasses, cups and bowls in a peg rack. Place utensils in a single layer in a flat-bottom rack. Place pots and pans in a flat-bottom rack. Do not overload the dish racks
11. Slide 1 dish rack into the wash compartment making sure that wares do not interfere with the rotating spray arms. Do not wash more than 1 dish rack at a time.
12. Close the front door fully, then press the START BUTTON. The green in-cycle light will illuminate and the wash cycle will begin. The wash cycle time runs for approximately 70 seconds.
13. Opening the door when the dishwasher is in-cycle will stop the dishwasher. The cycle will resume automatically when the dishwasher door is closed fully.
14. The final rinse cycle begins at the end of the wash cycle and runs for approximately 15 seconds . Check the RINSE temperature digital display during the final rinse and make sure that it indicates a minimum of 180-195ºF/82-91ºC. The final rinse water is retained for the next wash cycle.

ATTENTION

If the dishwasher door is left open for more than 5 seconds during the normal wash mode, then the dishwasher cycle will reset to the beginning of the normal wash mode.

Operation
Models UH200B and UH200

Rinse Sentry Mode

As previously stated, the final rinse water temperature must be a minimum 180-195ºF/82-91ºC during the final rinse cycle to ensure that all wares are sanitized. If for any reason, the hot water temperature in the booster tank cannot provide this temperature, then the dishwasher will enter a Rinse Sentry Mode of operation.

The Rinse Sentry changes the Normal Operation Mode as described below:

1. The Rinse Sentry constantly monitors the water temperature inside final rinse booster.
2. If the temperature inside the booster heater falls below 180-195ºF/82-91ºC then the Rinse Sentry will extend the wash cycle time until the booster heater water temperature reaches the proper temperature.
3. The in-cycle light will remain illuminated during the Rinse Sentry Mode.
4. The dishwasher will continue to wash for a maximum time of 5 minutes.
5. After 5 minutes the Rinse Sentry will stop and the dishwasher cycle will resume normal operation.
6. The RINSE water temperature digital display must be monitored to ensure that a minimum of 180-195ºF/82-91ºC is maintained. If the temperature is below the required minimum, then the problem must be identified and corrected immediately to maintain sanitization.

Extended Wash Mode

The Extended Wash Mode is used to wash heavily soiled items such as pots, pans and other wares that require more washing time than the standard 70 second Normal Wash Mode. The dishwasher will remain in the Extended Wash Mode until the operator exits the mode.

1. Load a dish rack into the dishwasher, close the door fully and press the START button.
2. The green in-cycle light will illuminate and the dishwasher will begin a normal wash cycle.
3. Wait 10 seconds for the detergent to enter the wash compartment.
4. Press the EXT WASH button to place the dishwasher in the Extended Wash Mode.
5. The green extended wash light will illuminate indicating that the machine is in the Extended Wash Mode.
6. The dishwasher will continue to wash for a maximum of 15 minutes unless the operator presses the EXT WASH button again.
7. Press the EXT WASH button. The green extended wash light will go out indicating that the dishwasher has returned to the Normal Wash Mode.
8. The dishwasher will finish the wash cycle and perform a final rinse of the wares.

Operation

Models UH170B and UH170

The UH170B and UH170 feature temperature gauges, and an extended wash mode for hard to clean wares. A Rinse Sentry feature holds the dishwasher in a wash mode if the final rinse water is not hot enough to sanitize the wares.

Follow the instructions below to operate the dishwasher in a Normal Wash Mode.

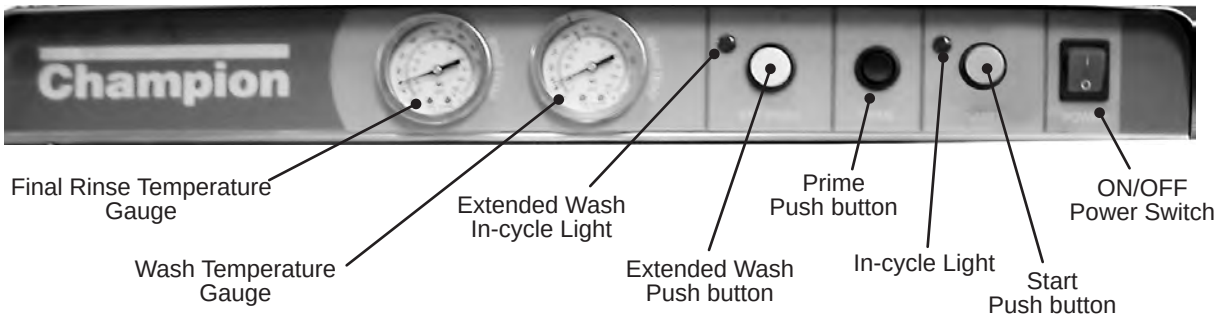

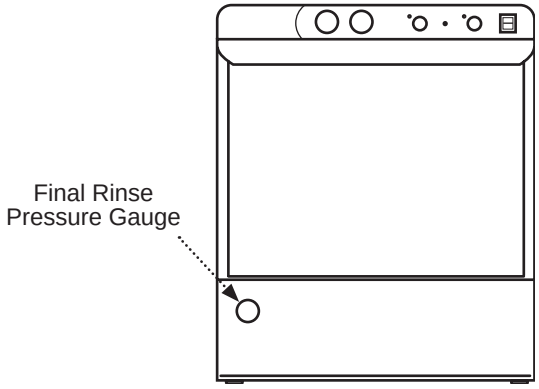

Approximate water fill level.

Normal Wash Mode

1. Make sure the flexible drain hose and the flexible fill hose are not kinked, then turn the water supply on.
2. Fully close the dishwasher front door.
3. Turn the main power on at the main circuit breaker.
4. Push the dishwasher Power Switch UP to turn the power ON.
5. The power switch will illuminate and the machine will fill.
6. Check the pressure gauge as the machine fills and make sure the incoming water pressure is between 20-22 psi [138-152 kPa].
7. Open the front door and check the water level in the wash tank compartment. The approximate water fill level should reach the top-left edge of the wash tank compartment as shown in the photograph on the left.
8. Close the door fully.
9. Wait 10 minutes for the booster heater to reach temperature and for the WASH temperature gauge to indicate a minimum of 150ºF/66ºC.

Operation

Models UH170B and UH170
(continued)

Normal Wash Mode

(continued)

10. Load soiled wares into the dish rack. Place plates, glasses, cups and bowls in a peg rack. Place utensils in a single layer in a flat-bottom rack. Place pots and pans in a flat-bottom rack. Do not overload the dish racks
11. Slide 1 dish rack into the wash compartment making sure that wares do not interfere with the rotating spray arms. Do not wash more than 1 dish rack at a time.
12. Close the front door fully, then press the START BUTTON. The green in-cycle light will illuminate and the wash cycle will begin. The wash cycle time runs for approximately 70 seconds.
13. Opening the door when the dishwasher is in-cycle will stop the dishwasher. The cycle will resume automatically when the dishwasher door is closed fully.
14. The final rinse cycle begins at the end of the wash cycle and runs for approximately 15 seconds Check the RINSE temperature gauge during the final rinse and make sure that it indicates a minimum of 180-195ºF/82-91ºC. The final rinse water is retained for the next wash cycle.

ATTENTION
If the dishwasher door is left open for more than 5 seconds during the normal wash mode, then the dishwasher cycle will reset to the beginning of the normal wash mode.

Rinse Sentry Mode

The final rinse water temperature must be a minimum 180-195ºF/82-91ºC during the final rinse cycle to ensure that all wares are sanitized. If for any reason, the hot water temperature in the booster tank cannot provide this temperature, then the dishwasher will enter a Rinse Sentry Mode of operation.

The Rinse Sentry changes the Normal Operation Mode as described below:

1. The Rinse Sentry constantly monitors the water temperature inside final rinse booster.
2. If the temperature inside the booster heater falls below 180-195ºF/82-91ºC then the Rinse Sentry will extend the wash cycle time until the booster heater water temperature reaches the proper temperature.
3. The in-cycle light will remain illuminated during the Rinse Sentry Mode.
4. The dishwasher will continue to wash for a maximum time of 5 minutes.
5. After 5 minutes the Rinse Sentry will stop and the dishwasher cycle will resume normal operation.
6. The RINSE water temperature gauge must be monitored to ensure that a minimum of 180-195ºF/82-91ºC is maintained. If the temperature is below the required minimum, then the problem must be identified and corrected immediately to maintain sanitization.

Operation
Models UH170B and UH170

Extended Wash Mode

The Extended Wash Mode is used to wash heavily soiled items such as pots, pans and other wares that require more washing time than the standard 70 second Normal Wash Mode. The dishwasher will remain in the Extended Wash Mode until the operator exits the mode.

1. Load a dish rack into the dishwasher, close the door fully and press the START button.
2. The green in-cycle light will illuminate and the dishwasher will begin a normal wash cycle.
3. Wait 10 seconds for the detergent to enter the wash compartment.
4. Press the EXT WASH button to place the dishwasher in the Extended Wash Mode.
5. The green extended wash light will illuminate indicating that the machine is in the Extended Wash Mode.
6. The dishwasher will continue to wash for a maximum of 15 minutes unless the operator presses the EXT WASH button again.
7. Press the EXT WASH button. The green extended wash light will go out indicating that the dishwasher has returned to the Normal Wash Mode.
8. The dishwasher will finish the wash cycle and perform a final rinse of the wares.

Operation
Models UH100B, UH100

The UH100B and UH100 feature a single temperature gauge to monitor the wash and the final rinse temperatures. The hot final rinse water is pumped into the wash tank compartment and then recirculated over the wares to achieve hot water sanitization.
Follow the instructions below to operate the dishwasher in a Normal Wash Mode.

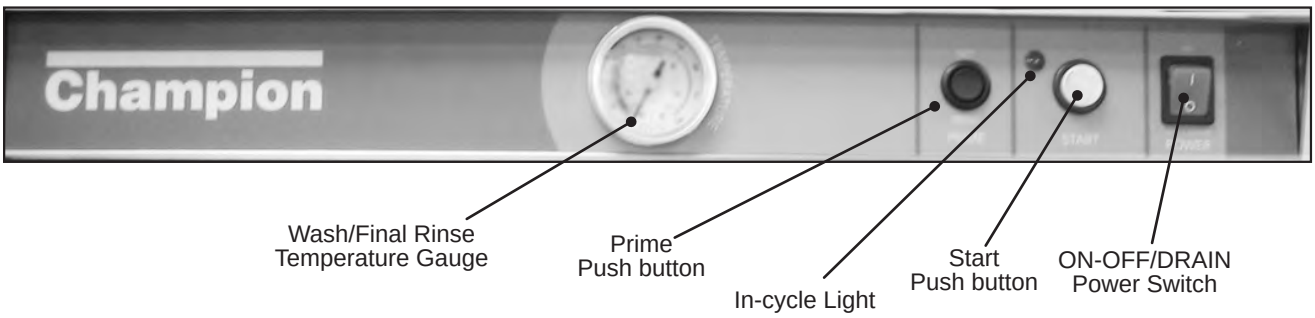

Operation
Models UH100B, UH100

Normal Wash Mode

1. Make sure the flexible drain hose and the flexible fill hose are not kinked, then turn the water supply on.
2. Fully close the dishwasher front door.
3. Turn the main power on at the main circuit breaker.
4. Push the dishwasher Power Switch UP to turn the power ON.
5. The power switch will illuminate and the machine will fill with water.
6. Open the front door and check the water level in the wash tank compartment. The approximate water fill level should reach the center of the wash tank compartment as shown in the photograph on the right.
7. Close the door fully.
8. Wait 10 minutes, then check that the wash/rinse temperature gauge indicates a minimum of 150ºF/66ºC

RUN THE FIRST DISHWASHER CYCLE EMPTY TO HEAT THE WASH TANK INTERIOR.

9. Load soiled wares into the dish rack. Place plates, glasses, cups and bowls in a peg rack. Place utensils in a single layer in a flat-bottom rack. Place pots and pans in a flat-bottom rack. Do not overload the dish racks
10. Slide 1 dish rack into the wash compartment making sure that wares do not interfere with the rotating spray arms. Do not wash more than 1 dish rack at a time.
11. Close the front door fully, then press the START BUTTON or 1 second. The green in-cycle light will illuminate and the wash cycle will begin. The total cycle time runs for approximately 140 seconds.
12. Opening the door when the dishwasher is in-cycle will stop the dishwasher. The cycle will resume automatically when the dishwasher door is closed fully.

Approximate water fill level.

ATTENTION
If the dishwasher door is left open for more than 5 seconds during the normal wash mode, then the dishwasher cycle will reset to the beginning of the normal wash mode.

13. The final rinse cycle begins at the end of the wash cycle. The machine drains and then refills with fresh water hot water. Check the Wash/Rinse temperature gauge during the final rinse and make sure that it indicates a minimum of 180-195ºF/82-91ºC. The final rinse water is retained for the next wash cycle.

Operation

Model UL100
Low temperature Chemical Sanitization

The UL100 features a single temperature gauge to monitor the wash and the final rinse temperatures. A chemical sanitizer is dispensed into the wash tank during the final rinse for chemical sanitization. Follow the instructions below to operate the UL100 in a Normal Wash Mode.

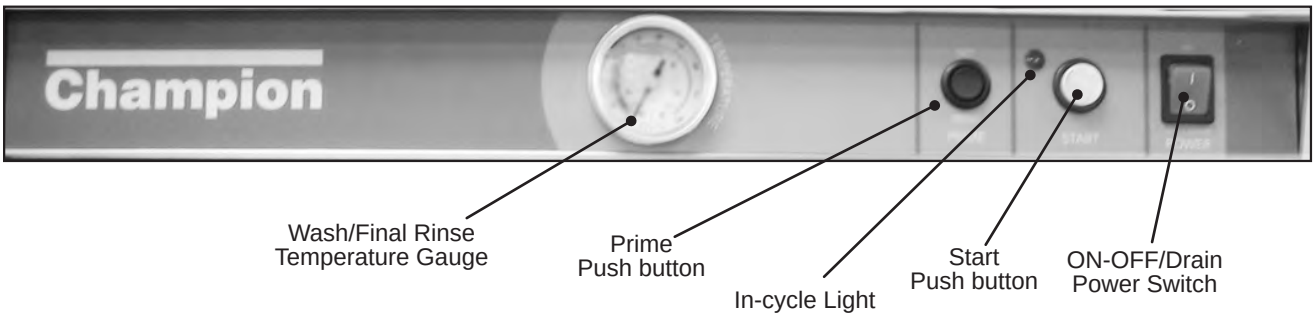

IMPORTANT
The UL100 Model is a low temperature chemical sanitizing dishwasher.
5.25% sodium hypochlorite (chlorine beach) must be used as a sanitizing agent to provide a minimum concentration of 50 ppm in the final rinse. The 50 ppm concentration must be checked using chlorine test strips to make sure that the proper concentration is maintained.

1. Make sure the flexible drain hose and the flexible fill hose are not kinked, then turn the water supply on.
2. Fully close the dishwasher front door.
3. Turn the main power on at the main circuit breaker.
4. Push the dishwasher Power Switch UP to turn the power ON.
5. The power switch will illuminate and the machine fills with water
6. Open the front door and check the water level in the wash tank compartment. The approximate water fill level should reach the center of the wash tank compartment as shown in the photograph to the right.
7. Close the door fully.
8. Wait 10 minutes, then check that the wash/rinse temperature gauge indicates a minimum of 140ºF/60ºC.

Approximate water fill level.

RUN THE FIRST DISHWASHER CYCLE EMPTY TO HEAT THE WASH TANK INTERIOR.

Operation

Model UL100

Low temperature Chemical Sanitization

9. Load soiled wares into the dish rack. Place plates, glasses, cups and bowls in a peg rack. Place utensils in a single layer in a flat-bottom rack. Place pots and pans in a flat-bottom rack. Do not overload the dish racks
10. Slide 1 dish rack into the wash compartment making sure that wares do not interfere with the rotating spray arms. Do not wash more than 1 dish rack at a time.
11. Close the front door fully, then press the START BUTTON or 1 second. The green in-cycle light will illuminate and the wash cycle will begin. The total cycle time runs for approximately 140 seconds.
12. Opening the door when the dishwasher is in-cycle will stop the dishwasher. The cycle will resume automatically when the dishwasher door is closed fully.

ATTENTION

If the dishwasher door is left open for more than 5 seconds during the normal wash mode, then the dishwasher cycle will reset to the beginning of the normal wash mode.

13. The final rinse cycle begins at the end of the wash cycle. The machine drains and then refills with fresh water hot water. Check the Wash/Rinse temperature gauge during the final rinse and make sure that it indicates a minimum of 140ºF/60ºC. The final rinse water is retained for the next wash cycle.
14. Routinely check the sanitizer concentration on the clean wares. The proper concentration is 50 ppm. Consult your chemical supplier for the proper test procedures.

Cleaning

Models UH200B, UH200, UH170B, UH170, UH100B, UH100, UL100

After Each Meal Period or every 8 Hours of Operation.

For Models UH200B, UH200, UH170B, and UH170:

1. Open the dishwasher door.
2. Press the lighted power switch down to the OFF position. The power switch light will go out.
3. Close the door.
4. The in-cycle light will illuminate and the dishwasher will drain, fill with water, perform 3 short cycles and then drain completely.
5. The in-cycle will go out indicating that the drain cycle is complete.
6. Remove the scrap screen carefully to keep the soil or waste particles from falling into the sump.
7. Clean the scrap screen by rinsing with clean water.
   Be sure to back-flush the screen.
   Do not strike the screen against solid objects.
8. Check the sump for foreign material and clean as required.
9. Replace scrap screen. Make sure that spray arms turn freely.
10. Check the chemical containers and refill as required.
11. Close the door and return to normal operation mode.

Remove the scrap screen

For Models UH100B, UH100, and UL100:

12. Open the dishwasher door.
13. Press the lighted power switch down to the OFF/DRAIN position.
    The power switch light will go out.
14. Close the door.
15. The in-cycle light will illuminate and the dishwasher will drain.
16. The in-cycle light will go out indicating that the drain cycle is complete.
17. Remove the scrap screen carefully to keep the soil or waste particles from falling into the sump.
18. Clean the scrap screen by rinsing with clean water.
    Be sure to back-flush the screen.
    Do not strike the screen against solid objects.
19. Inspect the sump and clean the pump intake screen.
20. Replace scrap screen.
21. Check the chemical containers and refill.
22. Close the door and return to normal operation mode.

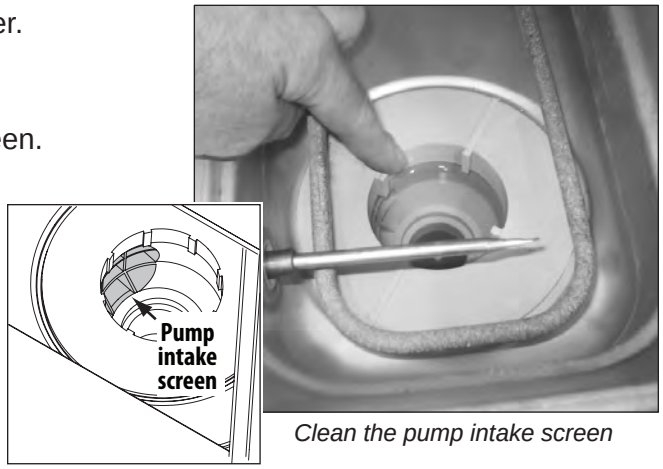

Clean the pump intake screen

Cleaning

Models UH200B, UH200, UH170B, UH170, UH100B, UH100, UL100

At the End of the Day

For Models UH200B, UH200, UH170B, and UH170:

1. Perform Steps 1-8 on the previous page.
2. Remove the upper and lower rinse and wash spray arms. The spray arms are interchangeable.
3. Disassemble the rinse arm, rinse arm pin and the retaining spacer.
4. Flush the rinse arm with clean water.
5. Inspect the rinse arm bearings for wear. Contact a service agent to replace the bearings if needed.
6. Clean the final rinse arm nozzles using a straight pin or small piece of wire.
7. Reassemble the rinse arm assemblies.
8. Remove the wash arm assemblies and flush with clean water.
9. Inspect the wash arm bearings for wear. Contact a service agent to replace the bearings if needed.
10. Inspect the wash tank heating element, and tank probes for scale build-up. Gently remove any build-up with a stainless steel scouring pad. DO NOT USE STEEL WOOL.
11. Wipe the interior and exterior of the machine with a soft cloth and a mild detergent. DO NOT HOSE THE EXTERIOR OF THE MACHINE WITH WATER.
12. Reassemble the dishwasher and leave the door open to aid in overnight drying.

Disassemble the rinse arm assembly.

Clean the upper and lower rinse arm bearings.

Clean the final rinse arm nozzles.

Clean the upper and lower wash arm bearings.

Cleaning

Models UH200B, UH200, UH170B, UH170, UH100B, UH100, UL100 (continued)

At the End of the Day

For Models UH100B, UH100, and UL100:

1. Perform Steps 12-22 on the previous page.
2. Remove the upper and lower wash spray arms. The spray arms are interchangeable.
3. Flush the wash arm and wash arm nozzles with clean water.
4. Inspect the wash arm bearings for wear. Contact a service agent to replace the bearings if needed.
5. Inspect the wash tank heating element, and tank probes for scale build-up. Gently remove any build-up with a stainless steel scouring pad. DO NOT USE STEEL WOOL.
6. Wipe the interior and exterior of the machine with a soft cloth and a mild detergent. DO NOT HOSE THE EXTERIOR OF THE MACHINE WITH WATER.
7. Reassemble the dishwasher and leave the door open to aid in overnight drying.

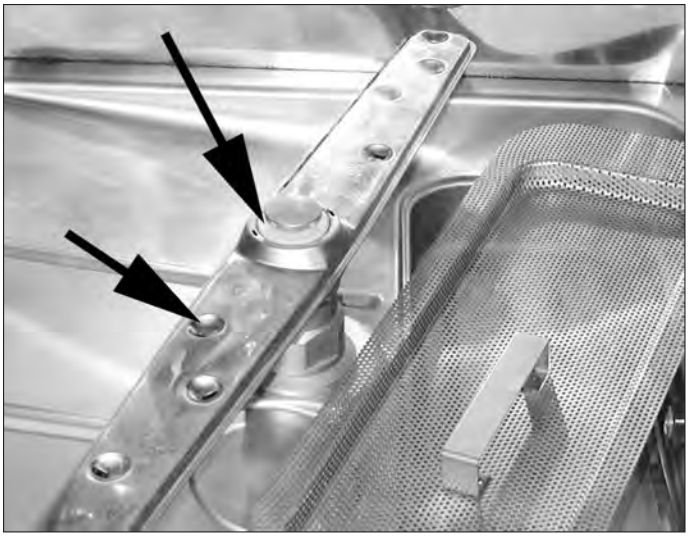

Flush the wash spray arms and nozzles with clean water

Clean the upper and lower wash spray arm bearings.

Cleaning

Models UH200B, UH200, UH170B, UH170, UH100B, UH100, UL100

De-liming

Minerals accumulate on the interior surfaces of the dishwasher. The deposits have a white haze and, in cases of heavy accumulation, may appear as a granular solid. The generic name for mineral deposits is lime. The removal of lime deposits is called de-liming. Your dishwasher should be de-limed regularly; how often will depend on the mineral content of your water.

Inspect your machine interior for lime deposits. If de-liming is required, a de-liming agent should be used for best results in accordance with the chemical supplier's instructions.

Danger:
Death or serious injury may result when de-liming solution is mixed with sodium hypochlorite *(chlorine bleach)* sanitizing agent. Mixing may cause hazardous gases to form.
De-liming solution and other acids must never be mixed with chlorine, iodine, bromine, or fluorine.

Caution:
Skin contact with de-liming solutions can cause severe irritation and possible chemical burns.
Always wear protective clothing when handling chemicals.

Attention:
Contact your chemical supplier for specific safety procedures and instructions for the use of the de-liming solution supplied for the dishwasher.
De-liming solution or other chemicals are not supplied by the dishwasher manufacturer.

Maintenance

Models UH200B, UH200, UH170B, UH170, UH100B, UH100, UL100

Follow the maintenance schedules below to keep the dishwasher operating most efficiently.

Daily Maintenance

1. Make sure the water supply is on and that the drain is not clogged.
2. Check the temperature gauges and/or displays to ensure they are operating.
3. Make sure the dish racks are in good condition.
4. Check the chemical containers and refill as required.
5. Follow the cleaning procedures given above.

Weekly Maintenance

1. Perform Steps 1-5 in the Daily Maintenance.
2. Inspect water lines for leaks.
3. Check for water leaks underneath the dishwasher.
4. Make sure the flexible water fill and drain hoses are not kinked.
5. Make sure that the dishwasher is level.
6. Clean accumulated lime deposits from the wash tank heating element.
7. Inspect the scrap screen and replace it if damaged.
8. Check the spray arms and replace or repair if damaged.

Monthly Maintenance

1. Perform the Daily and Weekly Maintenance listed above.
2. Clean the chemical dispenser pick-up tubing for the detergent and rinse-aid pumps.
   Clean the sanitizer pick-up tubing *(Model UL100 only).*

To clean the pick-up tubing:

1. Remove the pick-up tubes from their containers.
2. Place each tube in a separate container of hot water.
3. Press and hold the PRIME button up in the DET position until water flows into the wash tank compartment.
4. Press and hold the PRIME button down in the RINSE position until water flows into the wash tank compartment. *(Repeat for Model UL100 sanitizer).*
5. Return the pick-up tubes to their containers.
6. Run 3 empty dishwasher cycles to flush any chemicals from the dishwasher wash compartment.

Troubleshooting

Models UH200B, UH200, UH170B, UH170, UH100B, UH100, UL100

Condition	Cause	Solution
Dishwasher will not run.	Door not closed. Main power OFF. Dishwasher OFF.	Close door completely. Check breaker on panel. Turn dishwasher ON.
Low or no water.	Main water supply off. Solenoid valve defective. Solenoid strainer clogged. Flow washer defective. Timer board defective.	Open supply valve. Install repair kit or replace. Clean strainer. Replace flow washer. Test/replace timer board.
Chemicals won't feed into dishwasher.	Chemical supply low. Supply tubing damaged. Supply tubing kinked. Pick-up tube clogged Timer board defective.	Refill chemical container. Replace tubing. Straighten tubing. Clean/replace tube. Test/replace timer board.
Low water pressure pumped from spray arms.	Clogged scrap screen. Clogged spray arms. Clogged pump intake screen.	Clean scrap screen. Clean spray arms. Inspect sump and clean pump intake screen.
Poor wash results.	Water temperature low. Thermostat defective. (See chemicals won't feed above.) (See low or no water above.) Detergent injector defective. Wares incorrectly loaded. in dishrack. Booster high limit tripped. Wash tank high limit tripped.	Raise incoming water temperature. Adjust/replace thermostat. (See chemicals won't feed above.) (See low or no water above.) Replace squeeze tube. Replace injector motor. Clean tubing and pick-up. Reposition wares or reduce amount of wares. Reset or replace high limit. Reset or replace high limit.
Water has drained out of the wash tank while the dishwasher was idle.	Goose-neck loop in drain hose has been removed. Drain hose clamp is not holding the drain hose in proper position. Building plumbing does not provide correct air vent to prevent siphoning.	Re-route drain hose. DO NOT STRETCH HOSE Replace/Adjust hose clamp making sure goose-neck is maintained. Contact Service Agent and/or plumber.
(HT models only) dishwasher stays in wash cycle.	Rinse Sentry extends wash mode for a maximum time of 5-minutes to allow final rinse water booster temperature to reach 180˚F/82˚C. Dishwasher is in Extended Wash Mode.(UH200B, UH200, UH170B Only)	Raise incoming water temperature. Adjust/replace final rinse booster thermostat. Turn Extended Wash Mode off.

This Page Intentionally Left Blank

Service Replacement Parts

Illustrations Page

Wash Pump and Motor Assembly - *All Models* 36

Wash Tank, Lower Piping and Drain Assembly - *All Models* 38

Main Terminal Block and Timer Board Assembly - *All Models* 40

Control Thermostats and Center Bracket Assembly - *All Models* 42

Booster Assembly - *UH200B, UH170B, UH100B* 44

Fill Piping Assembly - *UH200B, UH200, UH170B, UH170* 46

Upper Final Rinse Piping - *UH200B, UH170B, UH170* 48

Wash and Rinse Spray Arm Assemblies - *UH200B, UH200, UH170B, UH170* 50

Control Thermostats and Center Bracket Assembly - *UH200, UH100, UL100* 52

Fill Piping Assembly - *UH100B, UH100, UL100* 54

Fill Solenoid Valve Assembly - *UH100B, UH100, UL100* 56

Fill Chute Assembly - *UH100B, UH100, UL100* 58

Wash/Rinse Spray Arm Assemblies - *UH100B, UH100, UL100* 60

Detergent Pump Assembly *UH200B, UH-200, UH170B, UH170, UH100B, UH100* 62

Rinse-Aid Pump Assembly *UH-200B, UH200, UH170B, UH170* 64

Rinse-Aid Pump Assembly - *UH100B, UH100, UL100* 66

Sanitizer Pump Assembly - *UL100* 68

Control Panel - *UH200B, UH200* 70

Control Panel - *UH170B, UH170* 72

Control Panel - *UH100B, UH100, UL100* 74

Panel Assembly - *All Models* 76

Door Assembly - *All Models* 78

Dish Racks, Line Strainer , and Pressure Regulating Valve (PRV) 80

Wash Pump/Motor Assembly - All Models

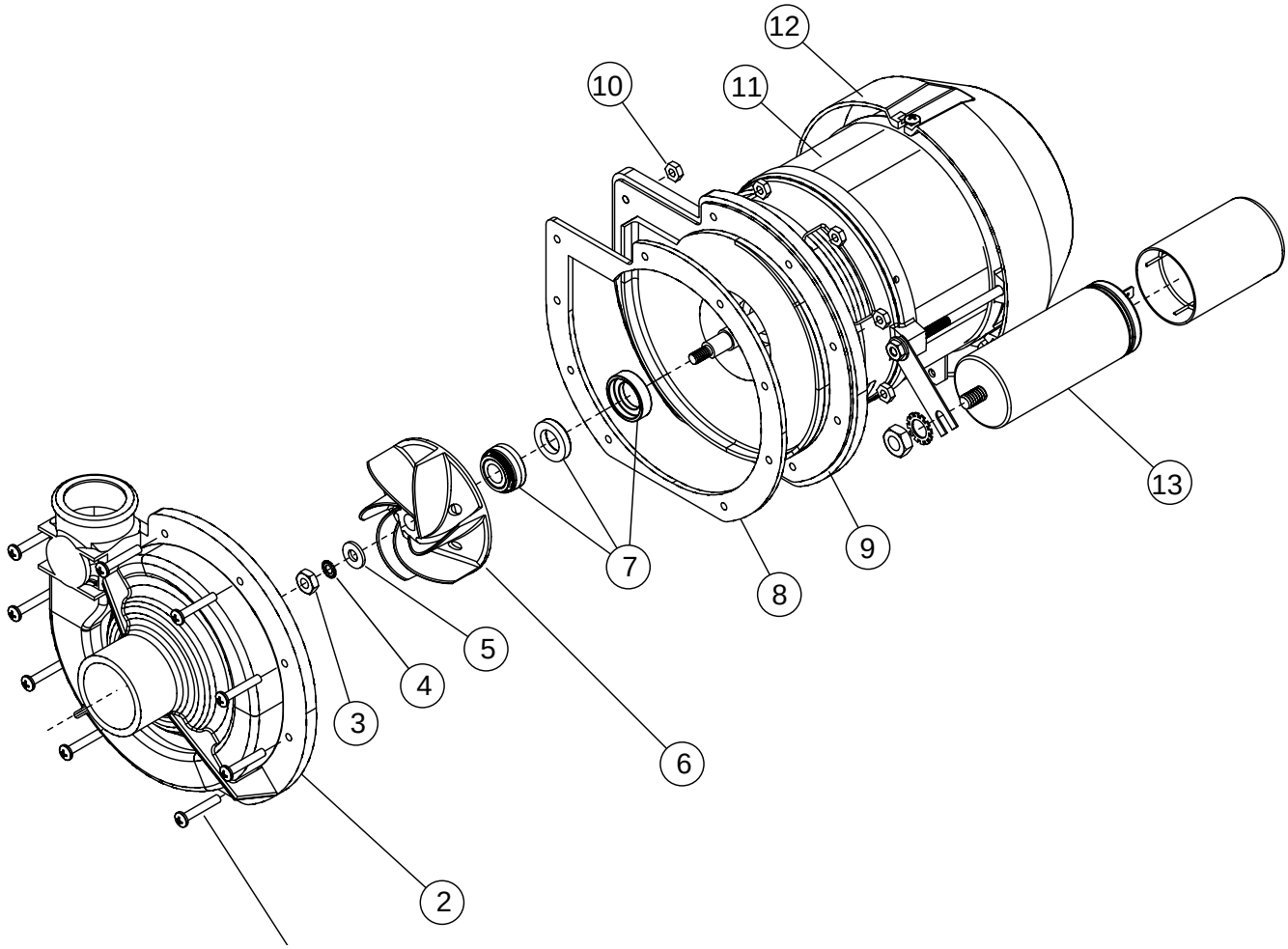

Item No.	Part No.	Description	Qty.
1	0512340	SCREW, M4, PHIL, PAN HD.	9
2	0512341	VOLUTE, PUMP	1
3	114144	NUT, M6	1
4	0501501	WASHER, LOCK, 1/4"	1
5	0501478	WASHER, PLAIN, 17/64"	1
6	0512345	IMPELLER	1
7	114139	SEAL	1
8	110285	GASKET	9
9	114137	BACKPLATE, PUMP	1
10	107337	NUT, M4	9
11	0512101	PUMP/MOTOR ASSEMBLY COMPLETE 115VAC/60/1	1
12	0513131	COVER, REAR MOTOR FAN	1
13	0512347	CAPACITOR 40μF	1

Wash Tank, Lower Piping and Drain Assembly - All Models

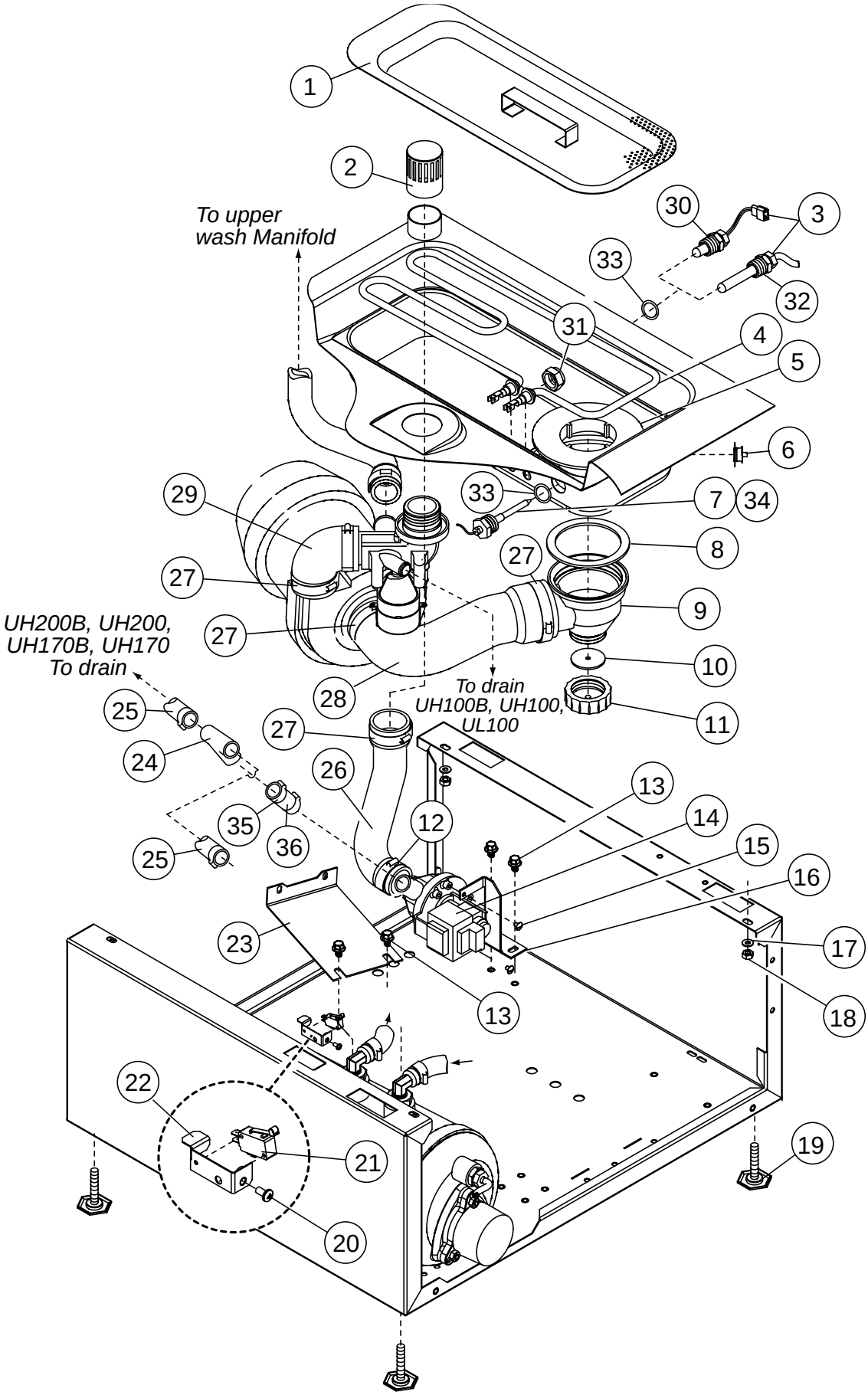

Item No.	Part No.	Description	Qty.
1	0512136	SCREEN, SCRAP ASSY.	1
2	0712236	TUBE, OVERFLOW GUARD *(UH200B, UH200, UH170B, UH170 ONLY)*	1
3	0512107	THERMOMETER, WASH TANK *(UH170B, UH170, UH100B, UH100, UL100)*	1
---	112612	THERMISTOR, 10kΩ, 2 WIRE ASSY, WASH TANK *(UH200B, UH200)*	1
4	0512169	HEATER, 120VAC 750W (120v LOW TEMP) *(UH200, UH170, UH100, UL100) All S/N's)*	1
---	0512168	HEATER, 230VAC 1200W *(Prior to S/N W14236)* *(UH200B, UH170B, UH100B)*	1
---	0512426	HEATER, 240VAC 2000W *(Beginning with S/N W14236 and above)* *(UH200B, UH170B, UH100B)*	1
5	D540088	FLANGE, PUMP SUCTION	1
6	110562	THERMOSTAT, BI-METAL SNAP	1
7	0507323	THERMOSTAT, WASH TANK *(All S/N's)*	1
8	D80208	GASKET, PUMP SUCTION	1
9	D500603	ELBOW, PUMP SUCTION	1
10	D80305	GASKET, ELBOW	1
11	108447	CAP, 1-1/4" PLASTIC	1
12	0512322	CLAMP, HOSE 1-13/16 - 2-3/4 MAX SST	2

(PARTS CONTINUED ON NEXT PAGE)

Item No.	Part No.	Description	Qty.
13	0512185	BOLT, HEX FLANGE 1/4-20 X 3/8" SST	2
14	0512227	PUMP, DRAIN 115V 60 HZ *(UH200B, UH200, UH170B, UH170 ONLY)*	1
15	0512352	SCREW, PHILLIPS PAN HEAD #10 x 3/4	2
16	0312145	BRACKET, DRAIN PUMP *(UH200B, UH200, UH170B, UH170 ONLY)*	1
17	0501501	WASHER, SPLIT LOCK 1/4" SST	4
18	100003	NUT, 1/4-20 HEX, SST	4
19	0503718	FOOT, ADJUSTING	1
20	0501411	SCREW, 10-32 X 1/4" RH SLOT SST	1
21	0501379	SWITCH, 15A	1
22	0312096	BRACKET, DOOR SWITCH	1
23	0312144	BRACKET, WASH PUMP	1
24	0512134	TEE, 3/4", POLY.	1
25	0509302	HOSE, 5/8" ID X 1" OD	1
26	0512132	HOSE, OVERFLOW MOLDED FWR *(UH200B, UH200, UH170B, UH170 ONLY)*	1
27	0502571	CLAMP, HOSE GEAR HOSE 1-1/2” SS	4
28	0512118	HOSE, PUMP SUCTION	1
29	0512119	HOSE, PUMP DISCHARGE	1
30	0512299	ADAPTOR, THERMISTOR *(UH200B, UH200)*	1
31	201029	NUT, LOCK 1/2 INCH NI PLATED	2
32	0508872	ADAPTOR, THERMOMETER	1
33	0501836	O-RING, ADAPTER	2
34	0508873	ADAPTOR, THERMOSTAT (NOT SHOWN)	1
35	0508808	CLAMP, SS GEAR	2
36	0313171	HOSE	1

This Page Intentionally Left Blank

Main Terminal Block and Timer Board Assembly - All Models

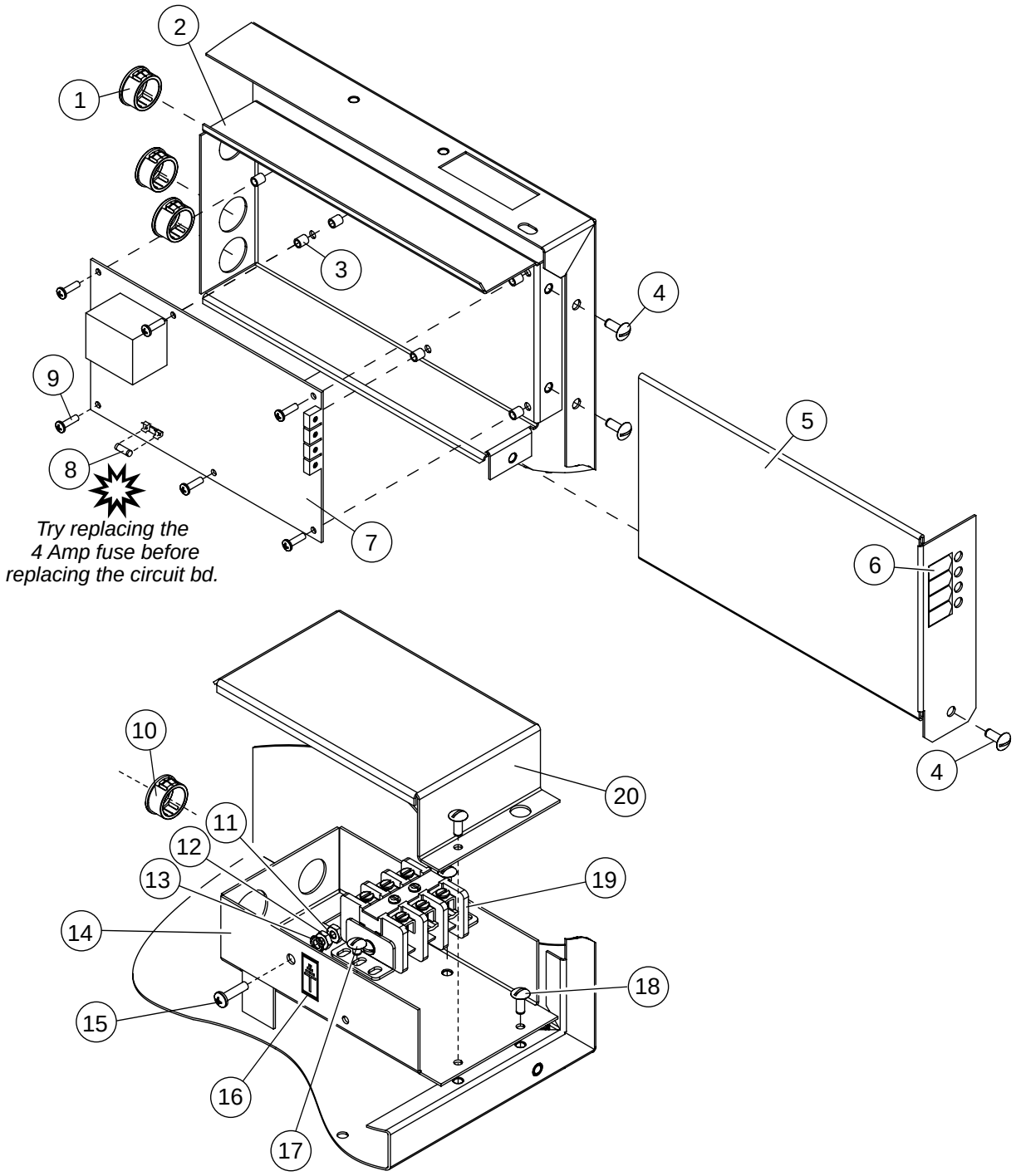

Item No.	Part No.	Description	Qty.
1	107964	BUSHING, SNAP (ALL)	3
2	0312188	BASE, TIMER ENCLOSURE	1
3	0508710	SPACER, 5/16	6
4	0501411	SCREW, 10-32 X 1/4 RH SLOT SS	3
5	0312189	COVER, TIMER ENCLOSURE	1
6	0512243	LABEL, ADJUSTMENT	1
7	0712105	TIMER CKT. BD. , SOLID STATE	1
8	0512373	FUSE, 4A 250VAC,	1
9	100764	SCREW, 6-32 X 1/2 ROUND HD PHI	6
10	0503647	BUSHING, STRAIN RELIEF	1
11	0501533	NUT, BRASS 10-32	2
12	0501472	WASHER, FLAT 1/8 X 1/2 BRASS	1
13	0501493	WASHER LOCK #10 EXT. TOOTH, BRASS	1
14	0312338	BASE, ENCLOSURE, ELEC. CONN	1
15	0501403	SCREW, BRASS RH 10-32X3/4 SLOT	1
16	0503592	LABEL, GROUND	1
17	100007	SCREW TRUSS SLOT SS 10-32X3/8	2
18	100213	SCREW, 10-32 X 1/4", TRUSS HD.	2
19	0504951	BLOCK, TERMINAL, 3-POLE *(Prior to S/N W14236)* UH100B, UH170B, UH200B Only	1
---	0509527	BLOCK, TERMINAL, 4-POLE *(Beginning with S/N W14236 and above)* UH100B, UH170B, UH200B Only	1
20	0312339	COVER, ENCLOSURE, ELEC. CONN	1

Control Thermostats and Center Bracket Assembly - All Models

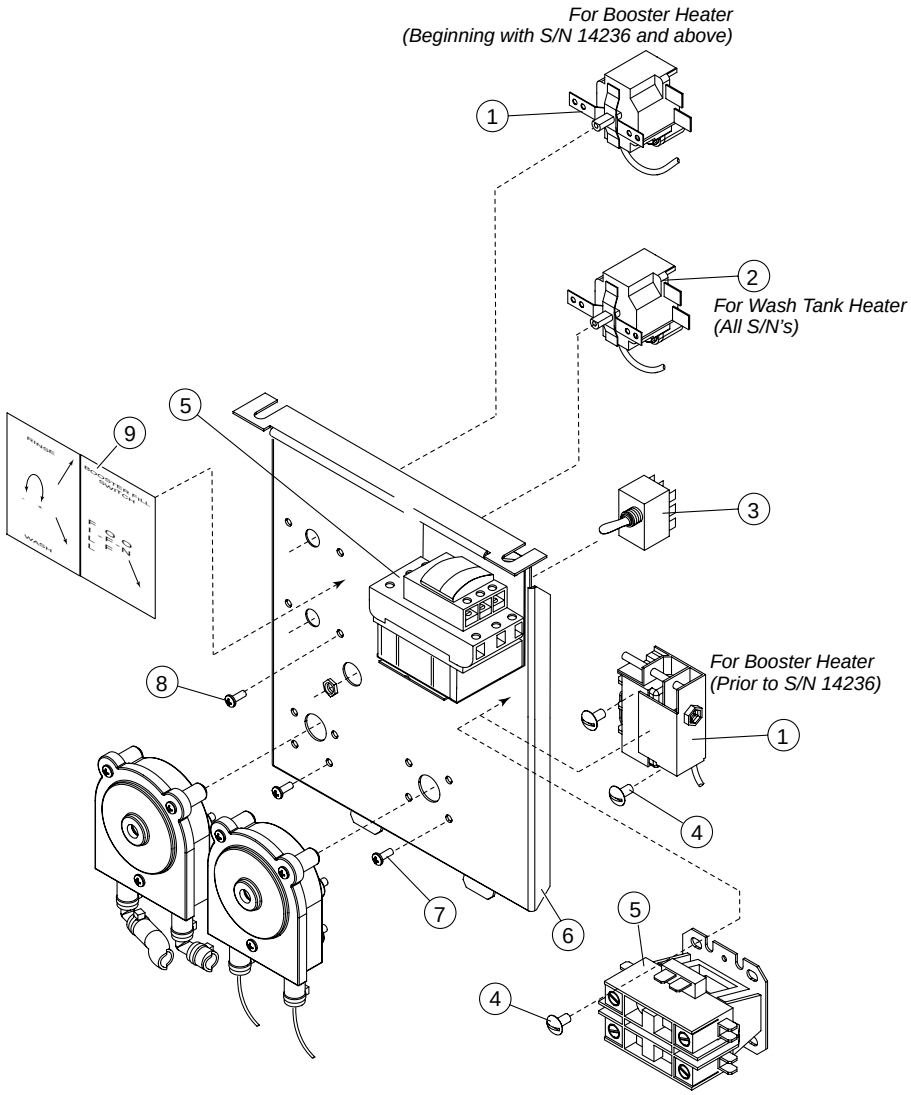

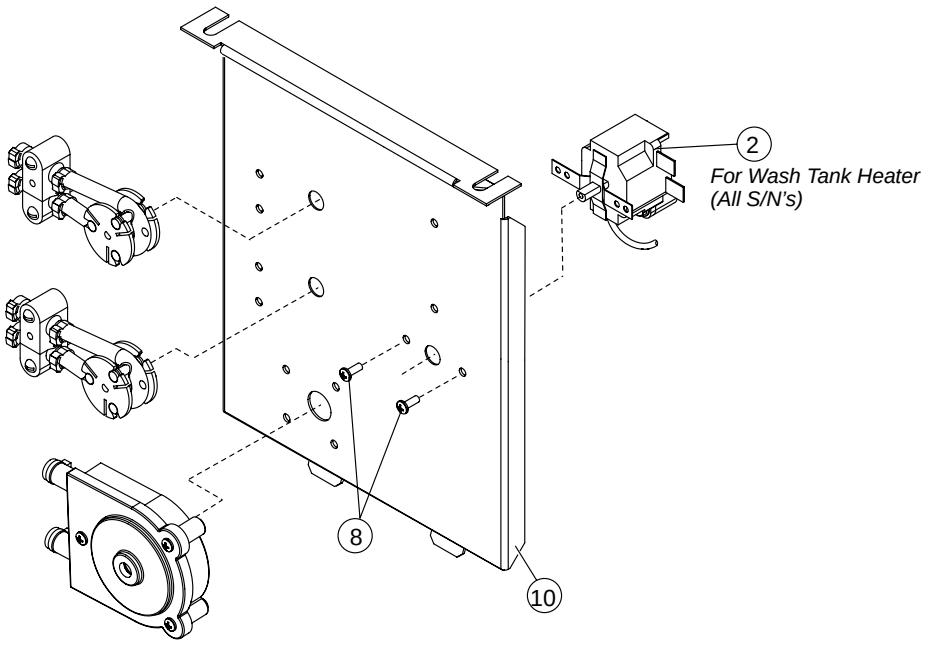

Item No.	Part No.	Description	Qty.
1	0512108	THERMOSTAT, BOOSTER *(Beginning with S/N W14236 and above)* UH100B, UH170B, UH200B Only	1
1	109069	THERMOSTAT, BOOSTER *(Prior to S/N W14236)* UH100B, UH170B, UH200B Only	1
2	0507323	THERMOSTAT, WASH TANK *(All S/N's)*	1
3	0501373	SWITCH, 3-POSITION TOGGLE	1
4	100007	SCREW, TRUSS SLOT SS 10-32 X 3/8	4
5	112518	CONTACTOR, 2-POLE 120V *(Prior to S/N W14236)* UH100B, UH170B, UH200B Only	1
5	0512432	CONTACTOR, 3-POLE 120V *(Beginning with to S/N W14236 and above)* UH100B, UH170B, UH200B Only	1
6	0312173	BRACKET, CHEMICAL PUMP, THERMOSTAT *(Prior to S/N W14236)*	1
---	0312173-2	BRACKET, CHEMICAL PUMP, THERMOSTAT *(Beginning with S/N W14236 and above)*	1
7	0504822	SCREW, 8-32 X 1/2 PAN HD PH SST	8
8	0501450	SCREW, NIBS RH 6-32 X 3/16 PHIL.SS	4
9	0512444	LABEL, RINSE-WASH, BOOSTER FILL SWITCH	1
10	0312173-3	BRACKET, CHEMICAL PUMP, THERMOSTAT UL100 Only	1

Booster Assembly - UH200B, UH170B, UH100B

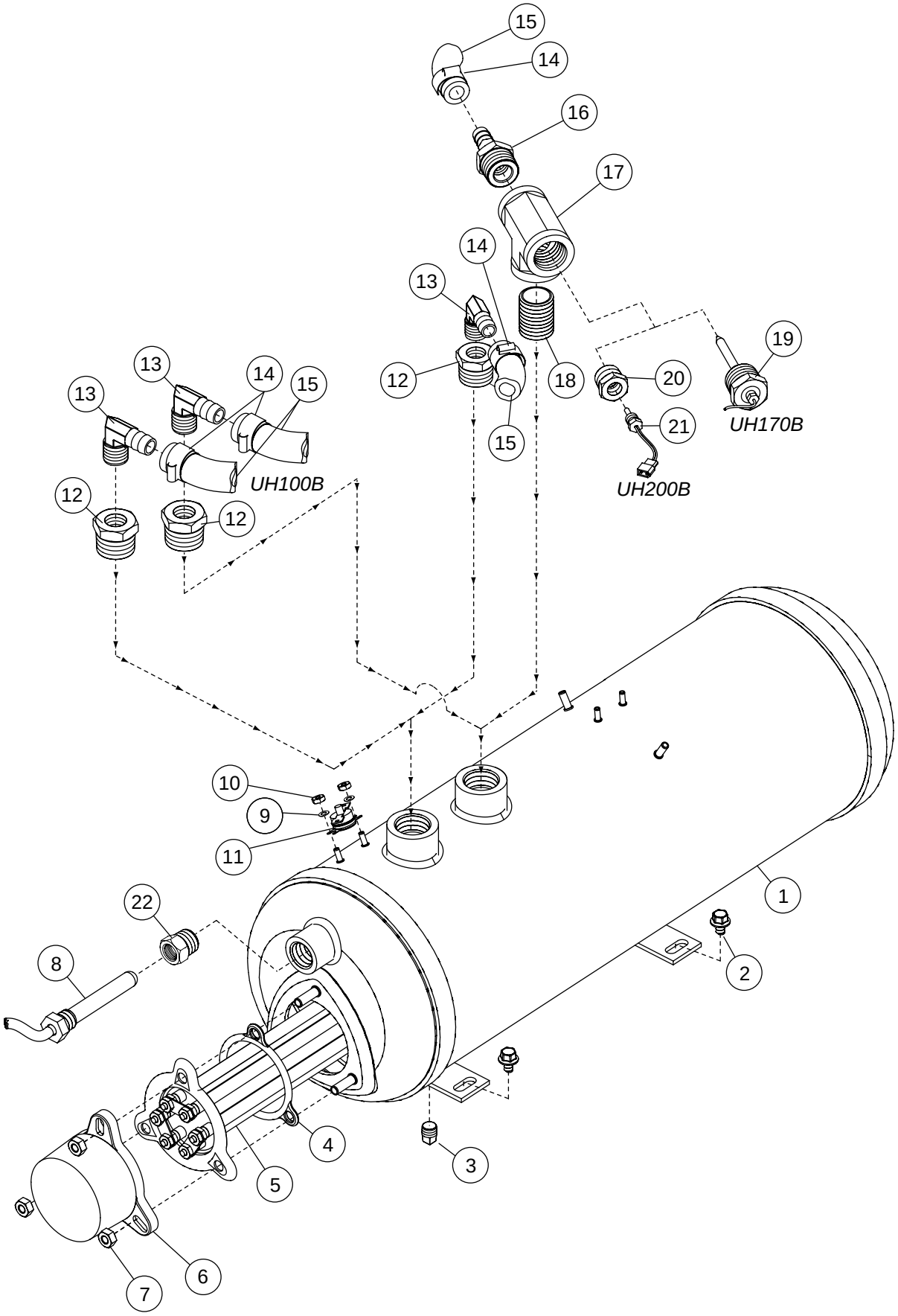

Item No.	Part No.	Description	Qty.
1	0509042	BOOSTER TANK	1
2	0512185	BOLT, HEX FLANGE 1/4-20 X 3/8" SS	2
3	0508817	PLUG, 1/8 HEX COUNTERSUNK	1
4	109985	SEAL, ELECTRIC HEATER FLANGE	1
5	111235	HEATER 5.6./6KW 208/240VAC *(40°F/22°C RISE BOOSTER)*	1
---	111233	HEATER 7.5/10KW 208/240VAC *(70°F/39°C RISE BOOSTER)*	1
6	107908	COVER, HEATING ELEMENT	1
7	100003	NUT, HEX SS 1/4-20	6
8	109069	THERMOSTAT, BOOSTER *(Prior to S/N W14236)*	1
---	0512108	THERMOSTAT, BOOSTER *(Beginning with S/N W14236 and above)* *(Order Item 22 with this part)*	1
9	0501501	WASHER, SPLIT LOCK 1/4" 304 SS	3
10	108954	NUT, GRIP 6X32 NYLON INSERT SS	2
11	110562	THERMOSTAT, BIMETAL SNAP	1
12	0508840	BUSHING, 3/4MPT X 3/8FPT BRASS	2
13	0502653	ELBOW, 90° 3/8MPT X 1/2" HOSE	2
14	0503679	CLAMP, SS GEAR-MIN. 5/16"	6
15	107417	HOSE, RUBBER 1/2" ID X .84" OD (*UH200B, UH200, UH170B, UH170)*	AR
16	0512297	COUPLER, 1/2" HOSE X 3/4" NPT	1
17	102525	TEE, RED, 3/4" X 1/2" X 3/4" BRASS	1
18	100184	NIPPLE 3/4" NPT	1
19	0512107	THERMOMETER, 2" DIAL, 7 FT. CAPILLARY (*UH170B)*	1
20	0512298	BUSHING RED, 1/8" NPT X 1/2" NPT *(UH200B)*	1
21	112612	THERMISTER, (*UH200B)*	1
22	0512425	ADAPTER, *(Must be used with 0512108)*	*1*

Fill Piping Assembly - UH200B, UH200, UH170B, UH170

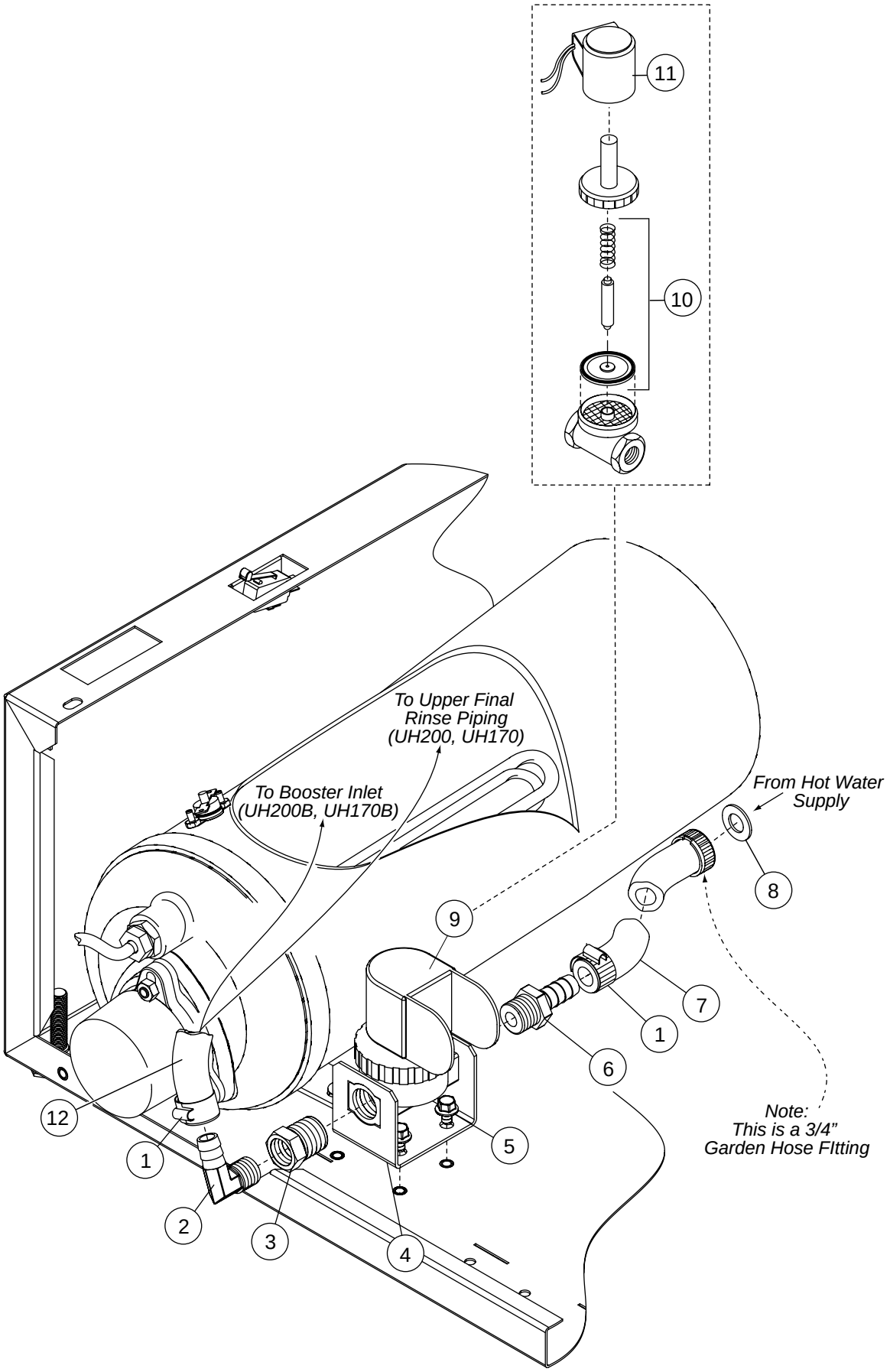

Item No.	Part No.	Description	Qty.
1	0503679	CLAMP, SS GEAR-MIN. 5/16"	2
2	0502653	ELBOW, 90° 3/8" MPT X 1/2" HOSE	1
3	0502650	BUSHING, 1/2" X 3/8"	2
4	0312146	BRACKET, 1/2" SOLENOID VALVE *(UH200B, UH200, UH170B, UH170)*	1
5	0512185	BOLT, HEX FLANGE 1/4-20 X 3/8" SS	2
6	0502618	BARB, HOSE 1/2" X 3/8" MPT	1
7	0509526	HOSE, 1/2" X 7' *(3/4" garden hose fitting)*	1
8	0505320	WASHER, 1" OD GARDEN HOSE	1
9	109886	VALVE, SOLENOID, 1/2” NPT 120VAC	1
10	109902	KIT, REPAIR, 1/2" SOLENOID VALVE	1
11	108516	KIT, REPAIR, COIL, 120VAC	1
12	107417	HOSE, RUBBER 1/2" ID X .84" OD	A/R

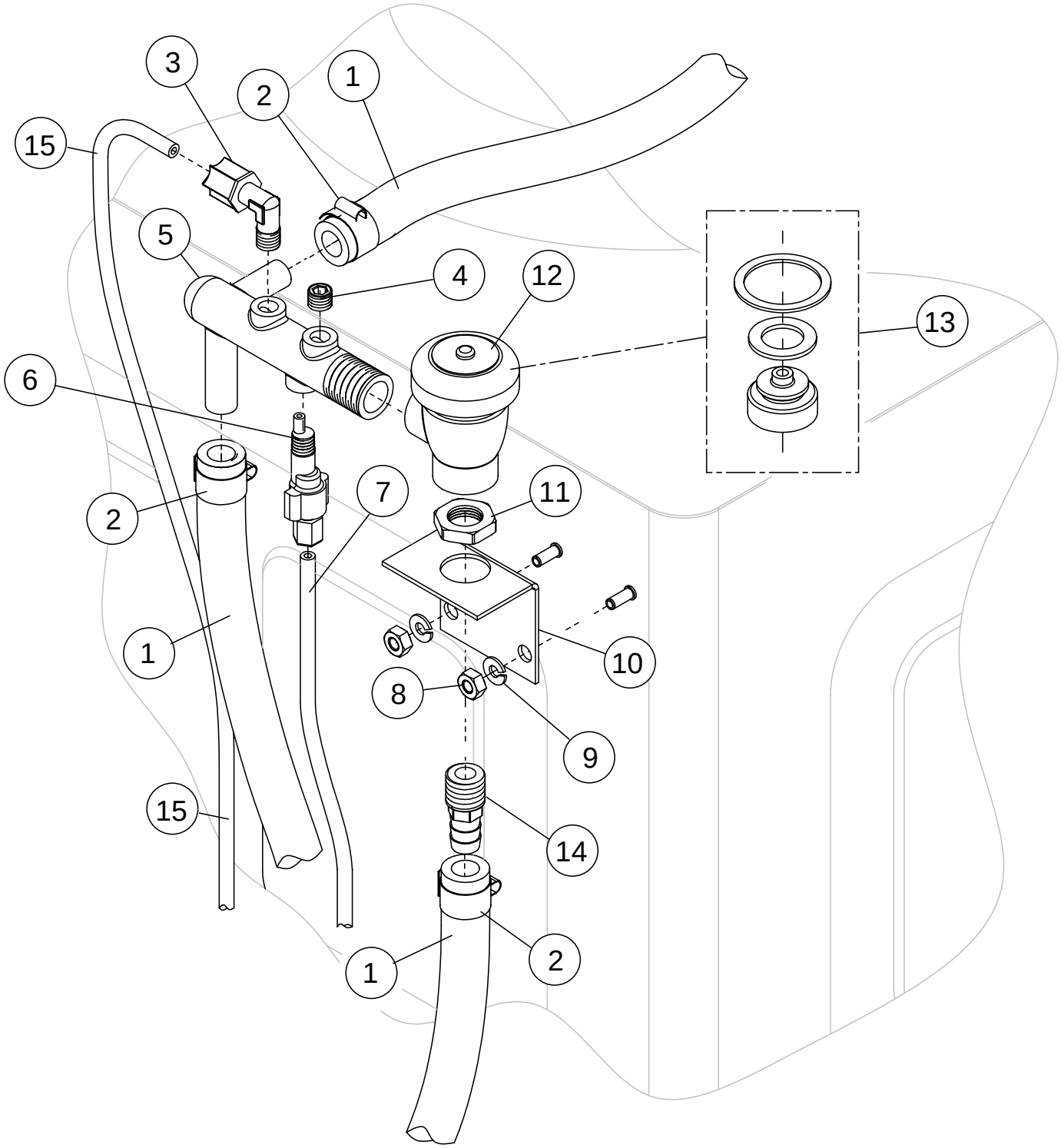
3
2
1
15
5
4
12
13
6
2
7
11
1
10
8
9
15
14
1
2

Item No.	Part No.	Description	Qty.
1	107417	HOSE, RUBBER 1/2ID X .84OD	AR
2	0503679	CLAMP, SS GEAR-MIN. 5/16-MAX.7/8	6
3	112728	FITT COMP 1/4OD X 1/8MPT ELL J	1
4	0508817	PLUG, 1/8 HEX COUNTERSUNK	1
5	0513110	MANIFOLD, RINSE *(UH200B, UH200, UH170B, UH170)*	1
6	112763	INJECTOR FITTING	1
7	112883	TUBING, 1/8OD X 1/16 ID	AR
8	100003	NUT, HEX SS 1/4-20	2
9	0501501	WASHER, SPLIT LOCK 1/4i 304SS	2
10	0312190	BRACKET, VACUUM BREAKER	1
11	201029	NUT, LOCK 1/2" NICKEL PLATED	1
12	100500	VACUUM BREAKER, 1/2" NPT, BRONZE	1
13	900836	REPAIR KIT, VACUUM BREAKER 1/2"	1
14	0502651	COUPLER 1/2 MPT X 1/2" HOSE	1
15	107928	TUBING, 1/4" NATURAL	AR

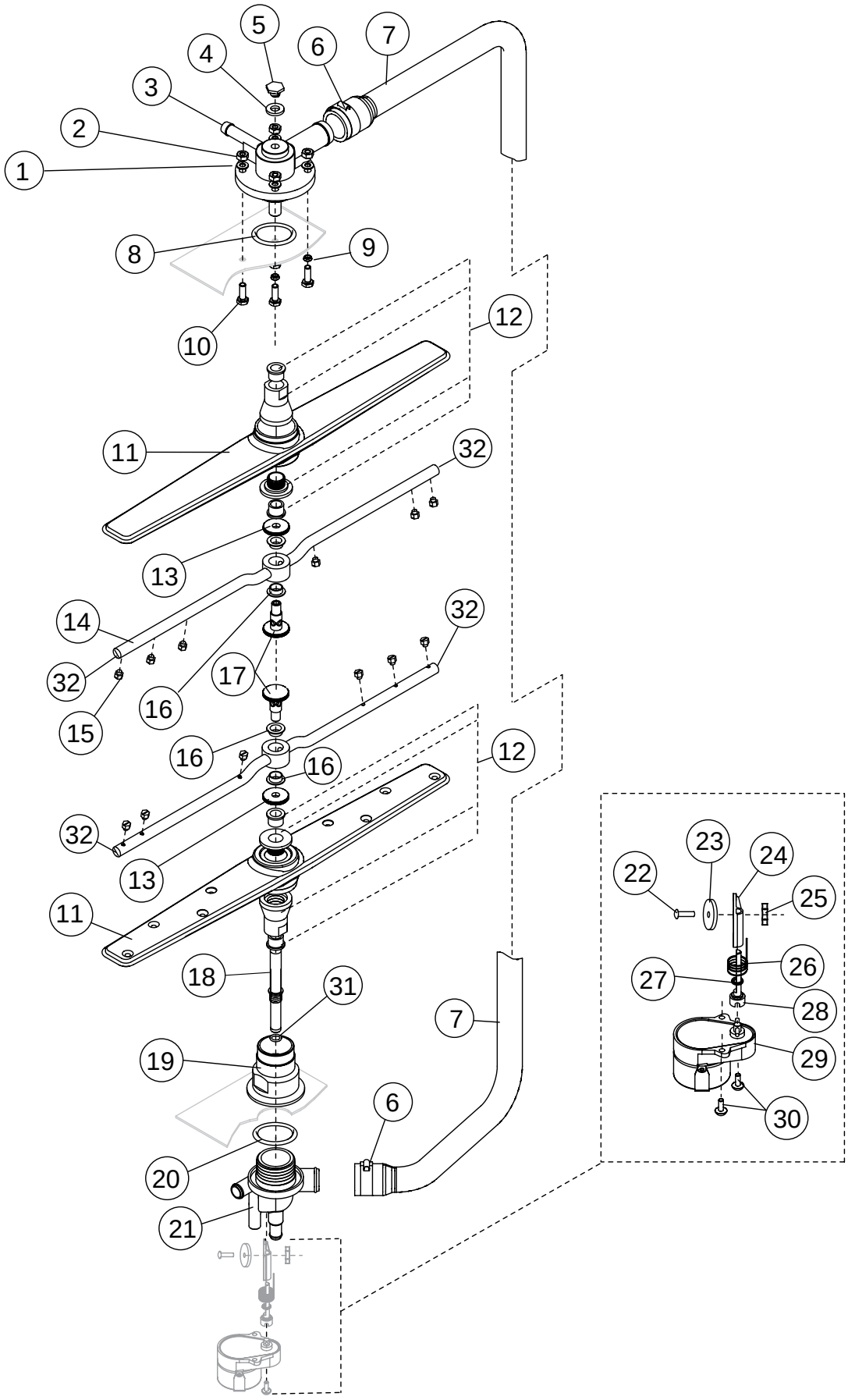
1
2
3
4
5
6
7
8
9
10
11
12
13
14
15
16
17
18
19
20
21
22
23
24
25
26
27
28
29
30
31
32

Item No.	Part No.	Description	Qty.
1	0501478	WASHER, 17/64 id X 9/16" OD SST	4
2	107967	NUT, HEX 1/40-20 NYLON INSERT SST	4
3	H35509	HUB, UPPER WASH ARM	1
4	107873	WASHER, PACKING	1
5	110215	SCREW, RETAINING	1
6	0502571	CLAMP, HOSE GEAR 1-1/2" SST	2
7	0512120	HOSE, UPPER WASH ARM	1
8	0512133	O-RING, 2-1/8" OD X 1-3/4" ID X 3/16"	1
9	0501481	WASHER, NYLITE	4
10	100738	BOLT, 1/4-20 X 1" SST	4
11	H420548	WASH ARM ASSEMBLY *(Includes Item 12)*	2
12*	0712749	BEARING ASSEMBLY	2
13	H34998	NUT, SPACER	2
14	H36211	RINSE ARM ASSEMBLY *(Includes Items 13, 16, and 17)*	2
15	H37149	NOZZLE, RINSE ARM	12
16	H190663	BEARING, RINSE ARM	4
17	H36275	SPINDLE, RINSE ARM	2
18	0512124	SHAFT, LOWER	1
19	0512066	HUB, LOWER WASH ARM	1
20	0512133	O-RING, 2-1/8" OD X 1-3/4" ID X 3/16"	1
21	0512102	MANIFOLD, LOWER FWR	1
22	100007	SCREW, TRUSS SLOT 10-32 X3/8" SST	1
23	0512127	GASKET, DRAIN	1
24	0512104	FLAP, DRAIN	1
25	100194	NUT, GRIP 10-32 SST	1
26	0512126	SPRING, TORSION	1
27	0512130	O-RING, DRAIN SHAFT	1
28	0512128	SHAFT, DRAIN	1
29	0712123	MOTOR, DRAIN 115VAC	1
30	104883	SCREW, 6-32 X 3/8 RD. HD. SLOTTED, SST	2
31	0512239	O-RING	1
32	0512789	PLUG, END	4
----	0712368	DRAIN MANIFOLD ASSEMBLY *(Includes Items 20-29)*	1

** Note:*
The bearing assembly, P/N 0712749 includes 2 bearings, 1 locknut, and 1 wash arm hub.
The bearings, locknut and hub are not available as separate service replacement parts.

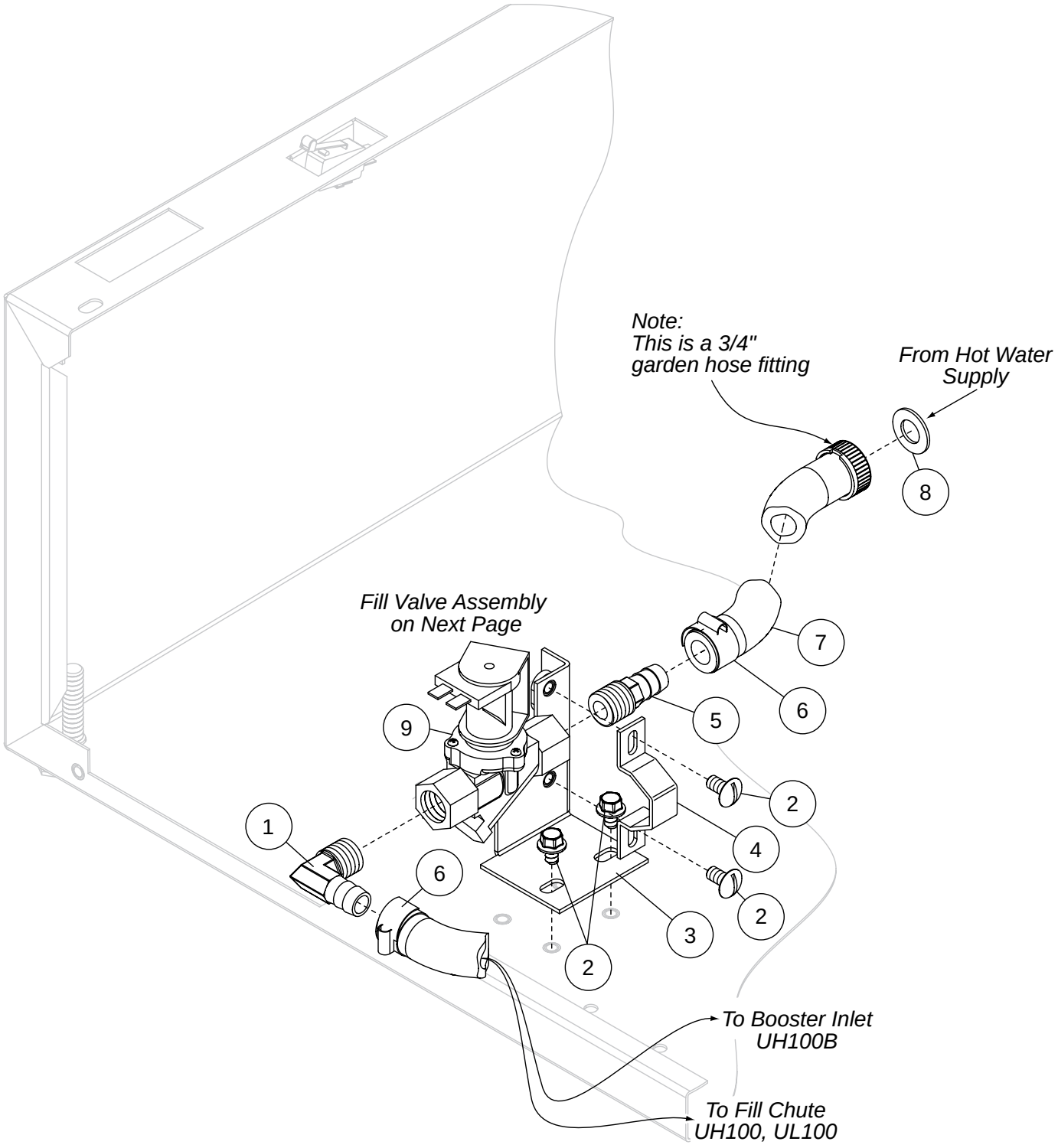
Note:
This is a 3/4"
garden hose fitting
From Hot Water
Supply
8
Fill Valve Assembly
on Next Page
7
6
5
9
2
4
1
6
2
3
2
To Booster Inlet
UH100B
To Fill Chute
UH100, UL100

Item No.	Part No.	Description	Qty.
1	0502653	ELBOW, 90 DEGR 3/8MPTX1/2 HOSE	1
2	0512185	BOLT, HEX FLANGE 1/4-20 X 3/8 SS	4
3	0300065	SUPPORT, VALVE	1
4	0300203	CLAMP, VALVE	1
5	0502618	HOSE BARB, 1/2 X 3/8 MPT	1
6	0503679	CLAMP, SS GEAR-MIN. 5/16-MAX.7/8	1
7	0509526	HOSE, 1/2 X 7FT FEM.GARD.ADAPT.	1
8	0505320	WASHER, 1” O.D. GARDEN HOSE	1
9	0504952	VALVE, FILL, 3/8" NPT	1

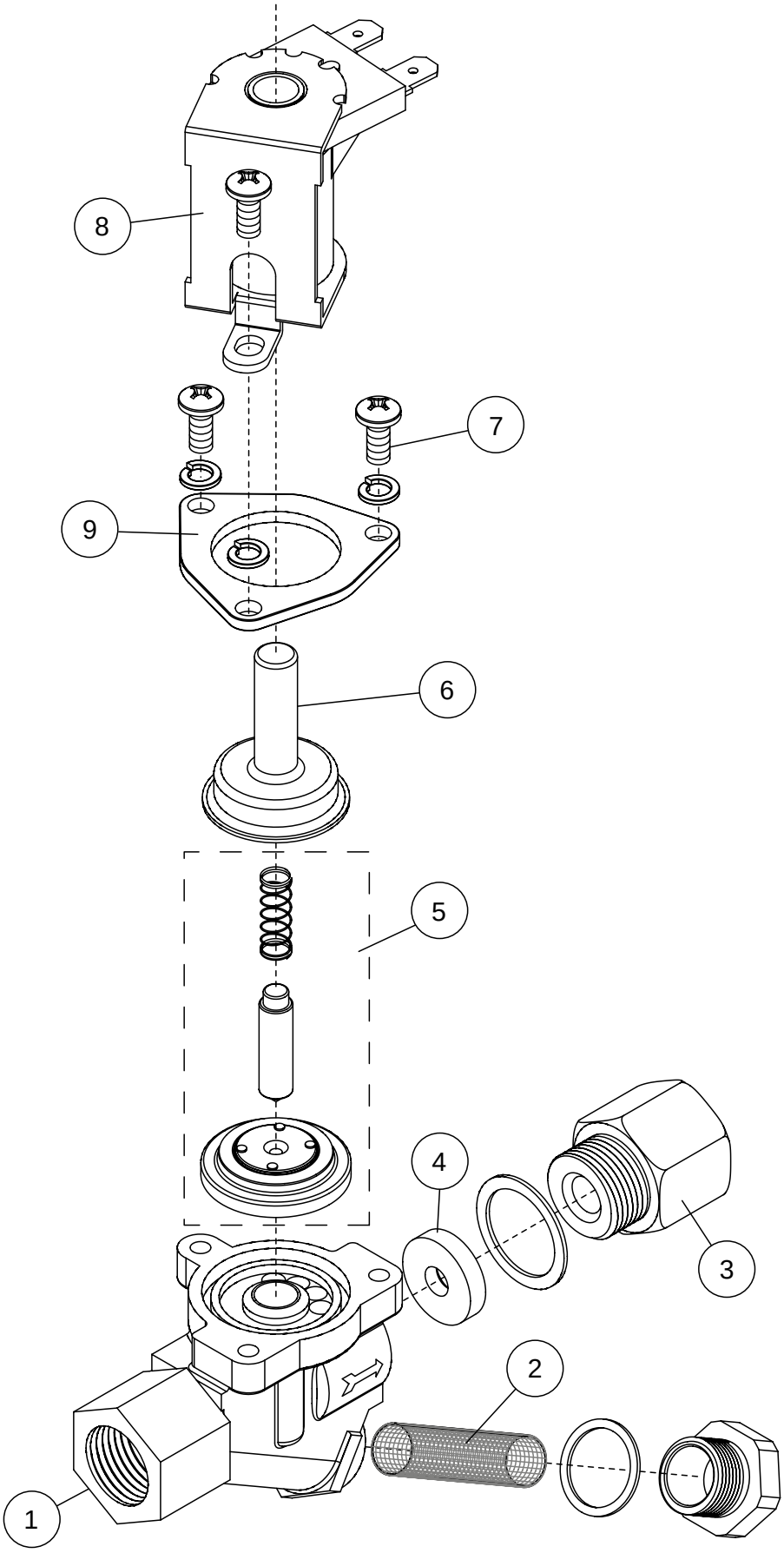
8
7
9
6
5
4
3
2
1

Item No.	Part No.	Description	Qty.
1	0504952	VALVE, FILL 5.0 GPM	1
2	0502803	SCREEN, SOL-VALVE STRAINER	1
3	0502804	GASKET, CAP	1
4	0504958	WASHER, FLOW 5.0 GPM	1
5	0502811	KIT, REBUILD	1
6	0505229	GUIDE	1
7	0501406	SCREW, SLOT SS RH 8-32 X 1/2"	3
8	0505235	COIL, 115V 60HZ 10W	1
9	0502807	GASKET	1

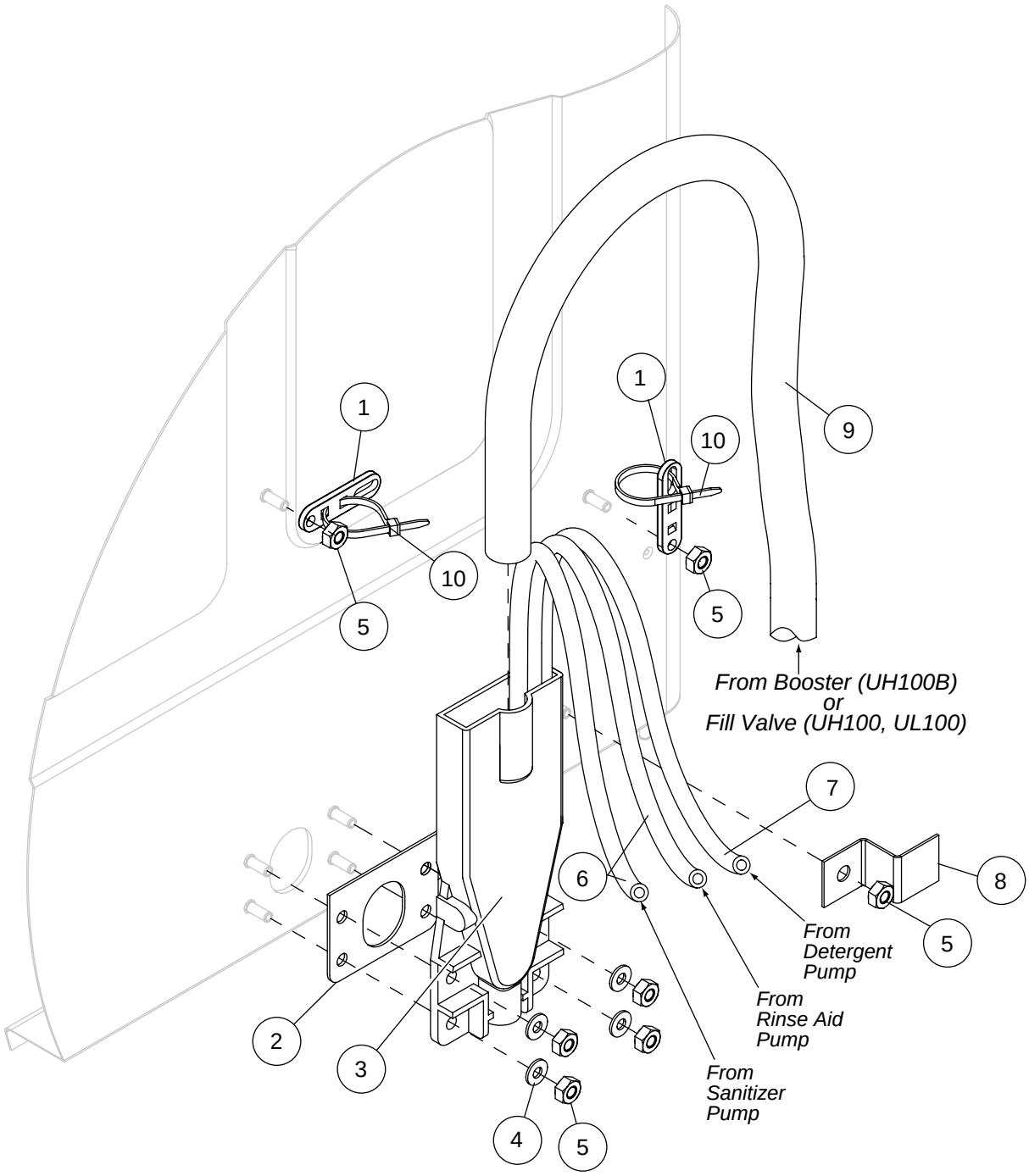
1
1
10
9
10
5
5
From Booster (UH100B)
or
Fill Valve (UH100, UL100)
7
6
8
5
From
Detergent
Pump
From
Rinse Aid
Pump
From
Sanitizer
Pump
2
3
4
5

Item No.	Part No.	Description	Qty.
1	106090	TIE PLATE	2
2	0509048	GASKET, INLET CHUTE	1
3	0508867	CHUTE, INLET	1
4	0507709	WASHER, FLAT #10 SS	4
5	0503722	NUT, HEX 10-32 SS	6
6	0502666	HOSE, 1/8" ID X 1/4" OD PVC	AR
7	0502667	HOSE, 1/4" ID X 3/8" OD PVC	AR
8	0308822	CLIP, HOSE	1
9	107417	HOSE, RUBBER 1/2" ID X .84" OD	AR
10	0501518	TIE, NYLON 5-1/2"	2

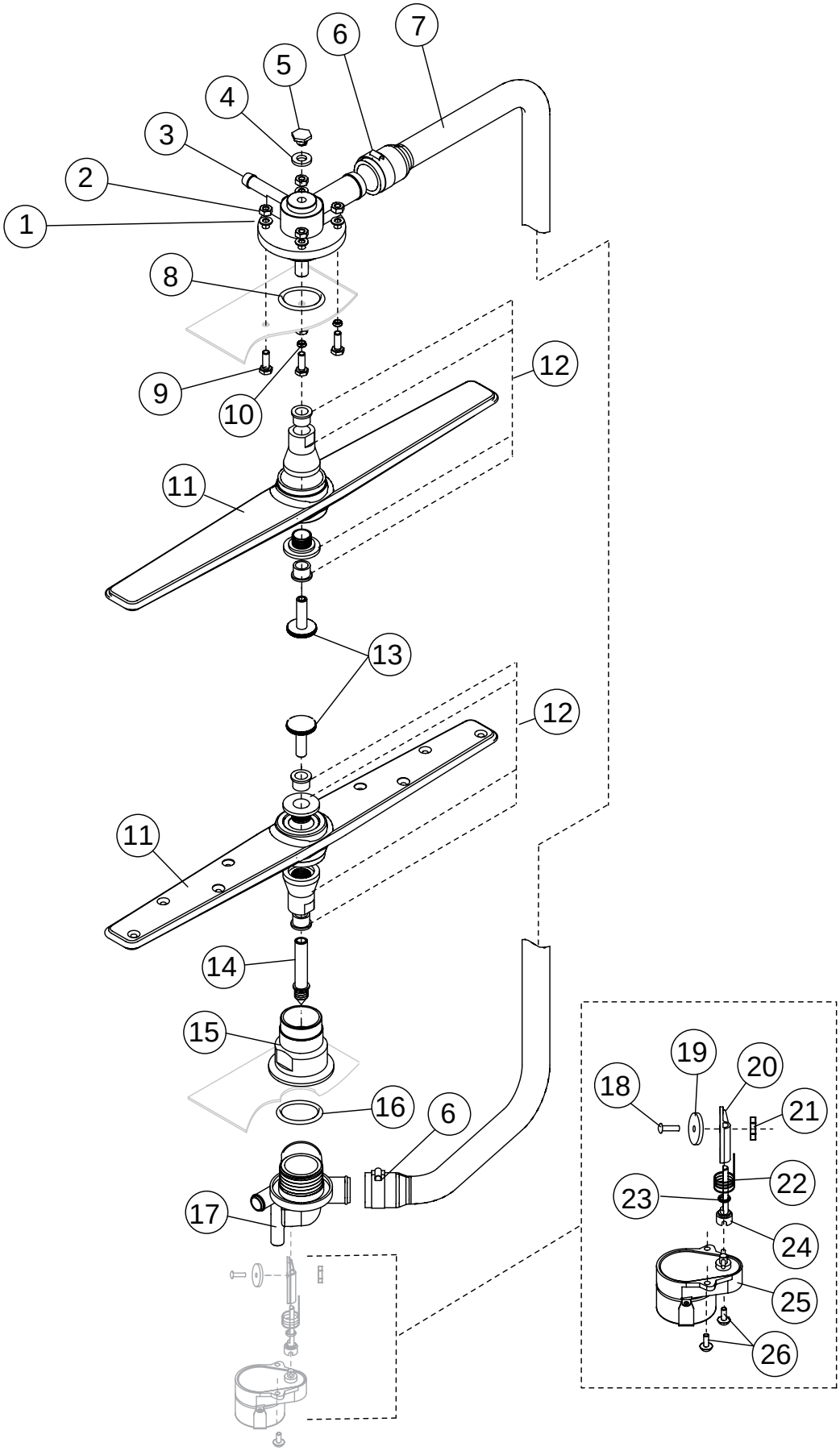
1
2
3
4
5
6
7
8
9
10
11
12
13
12
11
14
15
16
6
17
18
19
20
21
22
23
24
25
26

Item No.	Part No.	Description	Qty.
1	0501478	WASHER, 17/64" IDX 9/16" OD SST	4
2	107967	NUT, HEX SST 1/4-20 NYLON INSERT	4
3	H35509-1	HUB, UPPER WASH ARM	1
4	107873	WASHER, PACKING	1
5	110215	SCREW, RETAINING	1
6	0502571	CLAMP, HOSE GEAR HOSE 1-1/2” SST	2
7	0512120	HOSE, UPPER WASH ARM	1
8	0512133	O-RING, 2-1/8" OD X 1-3/4" ID X 3/16	1
9	100738	BOLT, 1/4-20 X 1" HEX. HD. SST	4
10	0501481	WASHER, NYLTITE	4
11	H420548	WASH ARM ASSEMBLY *(Includes Item 12)*	2
12*	0712749	BEARING ASSEMBLY	2
13	0512129	NUT, WASH ARM	2
14	0512125	SHAFT, LOWER	1
15	0512066	HUB, LOWER WASH ARM	1
16	0512133	O-RING, 2-1/8" OD X 1-3/4" ID X 3/16	1
17	0512103	MANIFOLD, LOWER	1
18	100007	SCREW, TRUSS SLOT 10-32 X3/8" SST	1
19	0512127	GASKET, DRAIN	1
20	0512104	FLAP, DRAIN	1
21	100194	NUT, GRIP 10-32 SST	1
22	0512126	SPRING, TORSION	1
23	0512130	O-RING, DRAIN SHAFT	1
24	0512128	SHAFT, DRAIN	1
25	0712123	MOTOR, DRAIN 115VAC	1
26	104883	SCREW, 6-32 X 3/8 RD. HD. SLOTTED, SST	2
----	0712367	DRAIN MANIFOLD ASSEMBLY *(Includes Items 17-25)*	1

** Note:*
The bearing assembly, P/N 0712749 includes 2 bearings, 1 locknut, and 1 wash arm hub.
The bearings, locknut and hub are not available as separate service replacement parts.

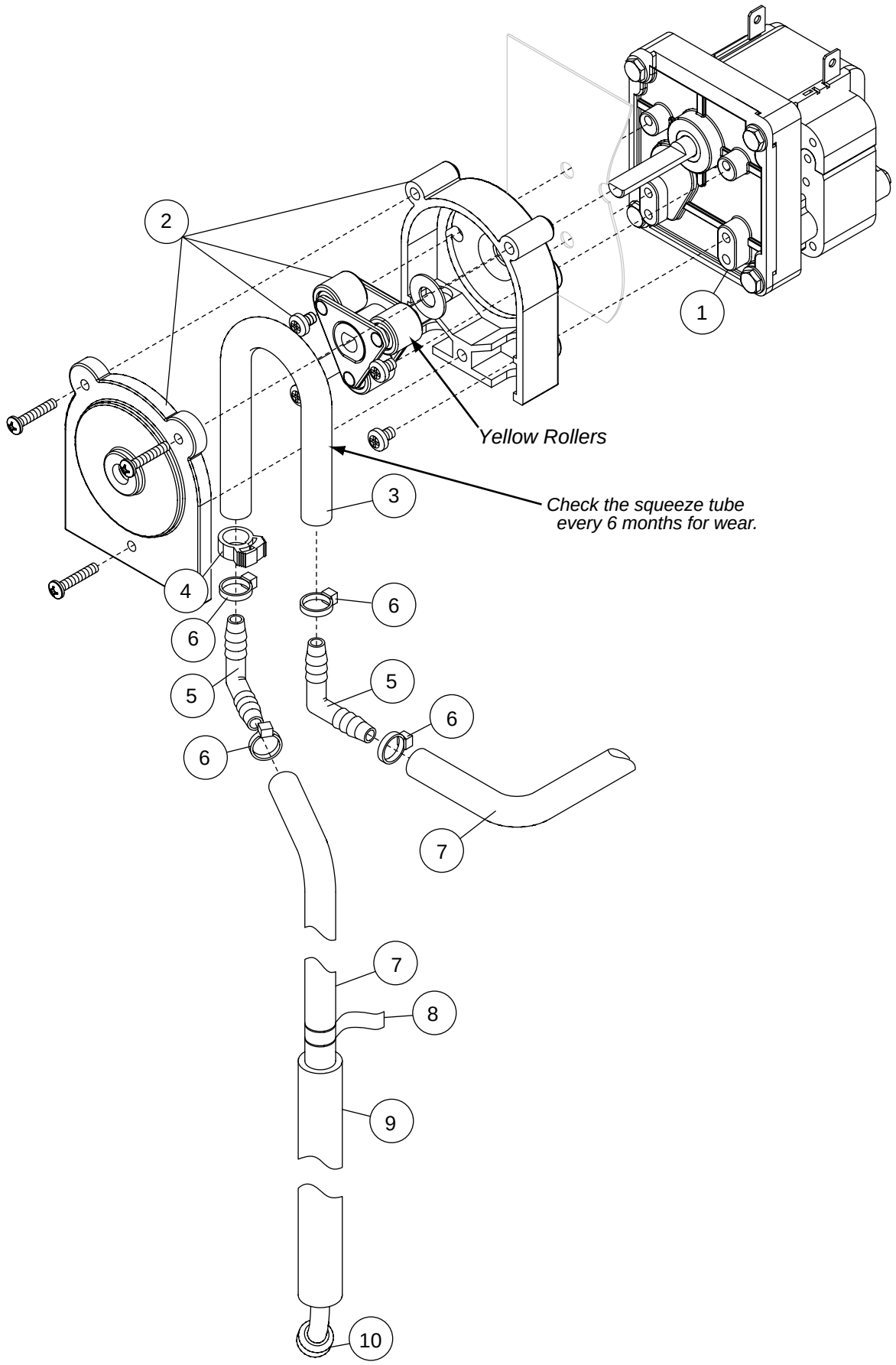
1
2
3
4
5
6
7
8
9
10
Yellow Rollers
Check the squeeze tube
every 6 months for wear.

Item No.	Part No.	Description	Qty.
1	0510870-1	GEARMOTOR, 115/60/1	1
2	114203	PUMP HD KIT, PERISTALIC *(Yellow Rollers)*	1
3	114202	TUBE ASY,SANTOPRENE, 3/16" X 3/8" X 8.5" LG.	1
4	0512369	CLAMP, HOSE	1
5	0502644	ELBOW, 1/4 HOSE BARB	2
6	0501519	TIE, NYLON 4"	4
7	0502667	HOSE, 1/4 ID X 3/8OD PVC	A/R
8	0503695	LABEL, DETERGENT	1
9	0306363	TUBE,1/2ID X 11-7/8 LG. STIFFENER	1
10	0501869	STRAINER	1

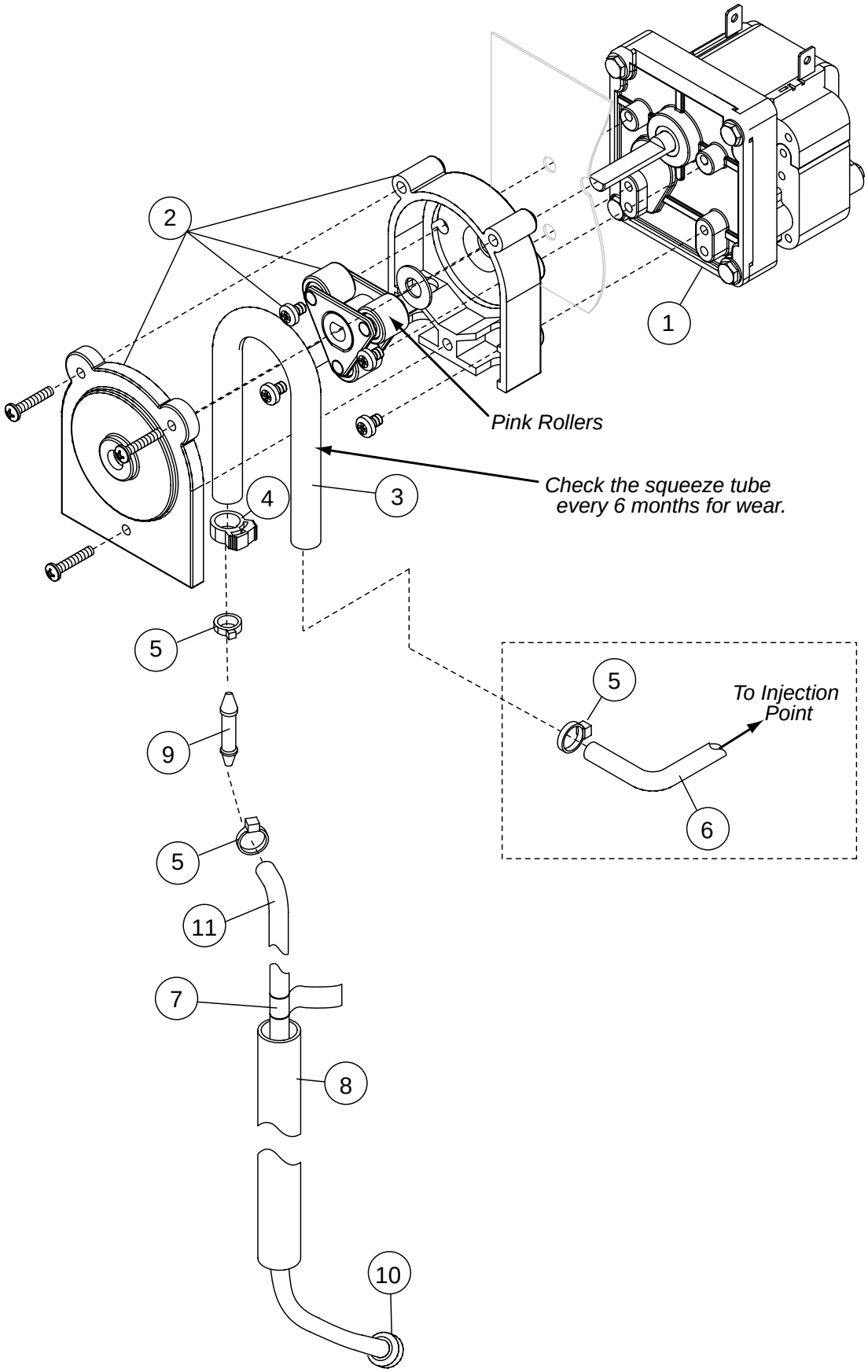
1
2
3
4
5
5
5
6
7
8
9
10
11
Pink Rollers
Check the squeeze tube every 6 months for wear.
To Injection Point

Item No.	Part No.	Description	Qty.
1	0510872-1	GEARMOTOR, RINSE-AID 115/60/1	1
2	0512325	PUMP HEAD, PERISTALTIC (PINK ROLLERS)	1
3	112759	TUBE, PUMP 1/8" id X 9" LG.	1
4	0512369	CLAMP, HOSE	1
5	0501519	TIE, CABLE 4"	4
6	112883	TUBING, 1/8" OD X 1/16" ID	A/R
7	0505483	LABEL, RINSE AID	1
8	0306363	TUBE, 1/2" ID X 11-7/8 LG. STIFFENER	1
9	0512794	CONNECTOR, 5/32" X 1/8"	1
10	0501869	STRAINER	1

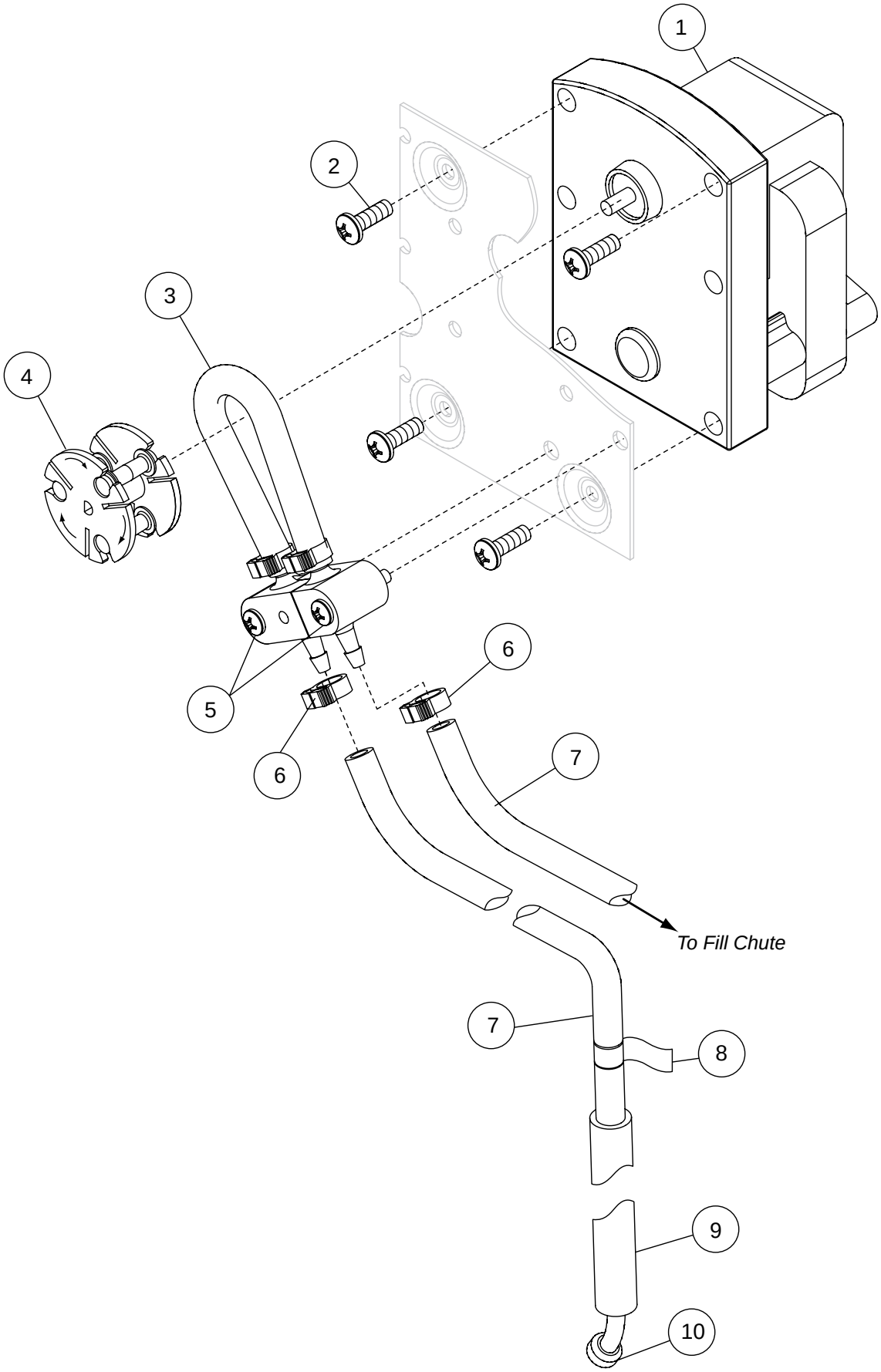
1
2
3
4
5
6
6
7
To Fill Chute
7
8
9
10

Item No.	Part No.	Description	Qty.
1	0503756	MOTOR, INJECTOR PUMP	1
2	0504822	SCREW, 8-32 X 1/2 PAN HD PH S.S	2
3	0706635	TUBE, ELEMENT ASSEMBLY 45CC	1
4	0707142	ROTOR, ASSEMBLY	1
5	0506589	SCREW, PAN 6-32X7/8 SS PHILLIP	2
6	0501519	TIE, NYLON 4"	4
7	0502666	HOSE, 1/8ID X 1/4OD PVC	1
8	0505483	LABEL, RINSE AID	1
9	0306363	TUBE,1/2IDX11-7/8LG. STIFFENER	1
10	0501869	STRAINER	1

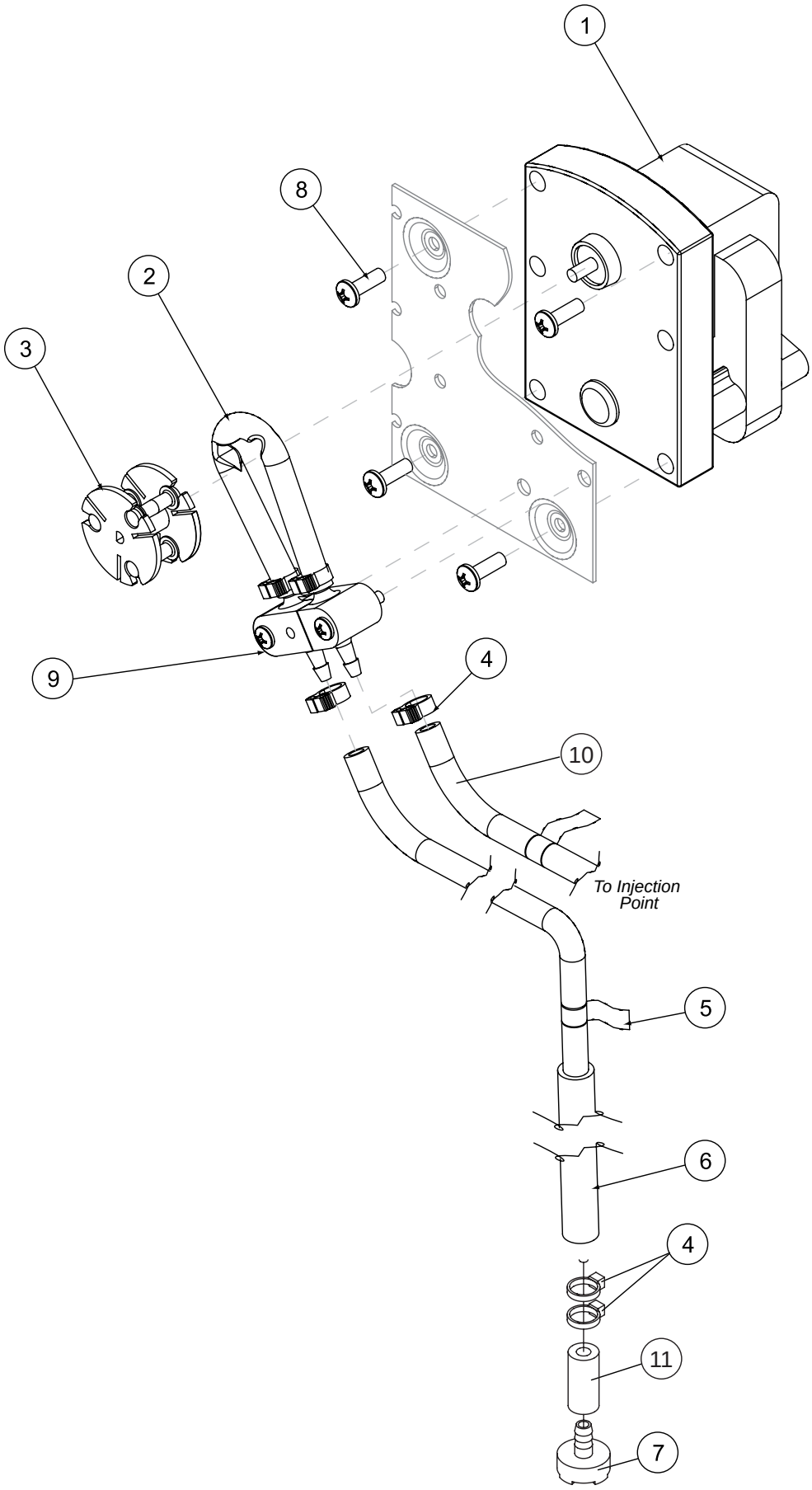
1
8
2
3
9
4
10
To Injection Point
5
6
4
11
7

Item No.	Part No.	Description	Qty.
1	0503756	MOTOR, INJECTOR PUMP	1
2	0706635	TUBE, ELEMENT ASSEMBLY 45CC	1
3	0707142	ROTOR, ASSEMBLY	1
4	0501519	TIE, NYLON 4"	4
5	0503694	LABEL, SANITIZER	1
6	0306363	TUBE,1/2IDX11-7/8LG. STIFFENER	1
7	0501869	STRAINER	1
8	0504822	SCREW, 8-32 X 1/2 PAN HD PH S.S	2
9	0506589	SCREW, PAN 6-32X7/8 SS PHILLIP	2
10	0502666	HOSE, 1/8ID X 1/4OD PVC	A/R
11	112759	TUBE, PUMP 1/8" ID X " LG.	1

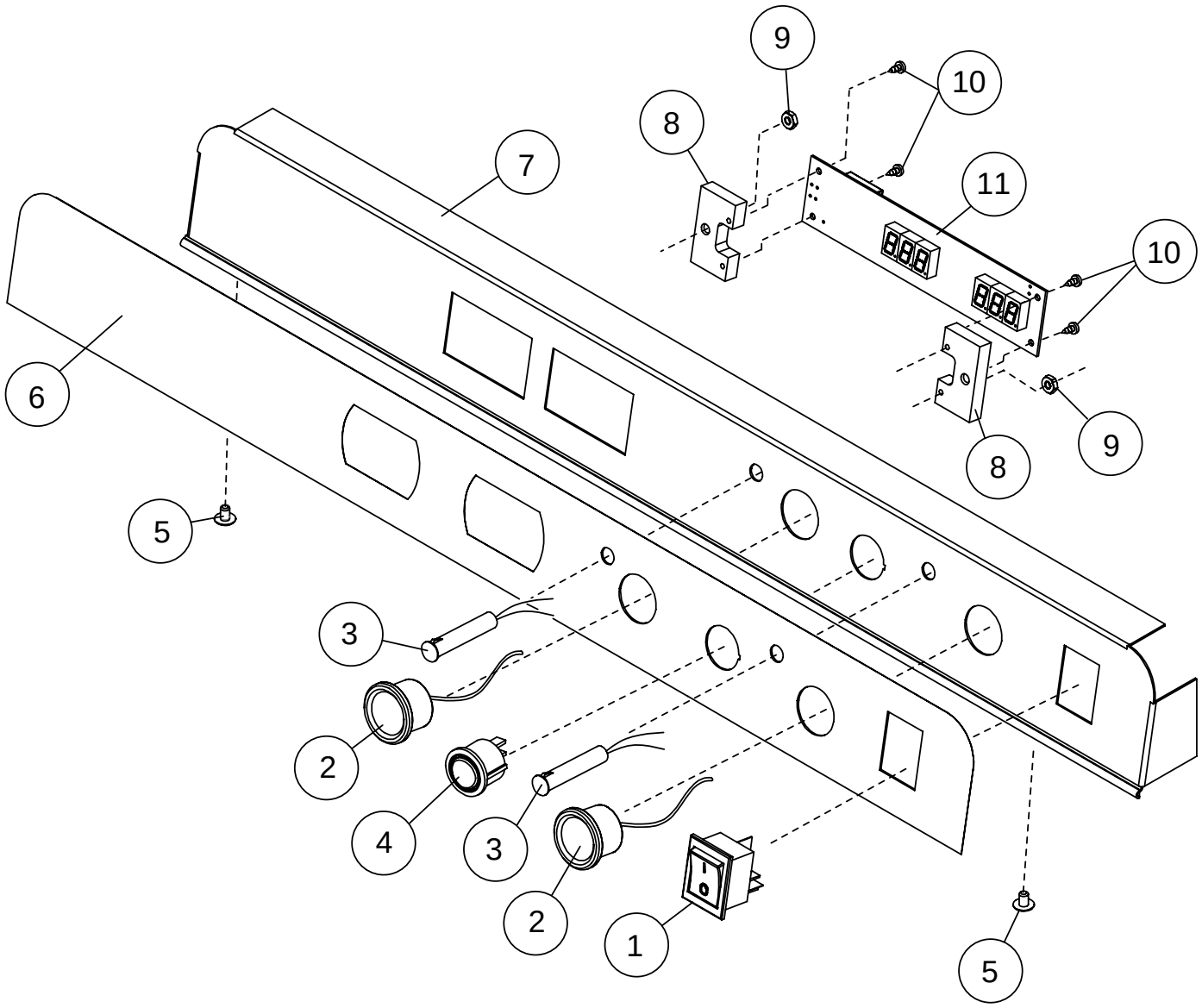
9
10
8
7
11
10
6
9
8
5
3
2
4
3
2
1
5

Item No.	Part No.	Description	Qty.
1	0512221	SWITCH, ROCKER DPDT 250V NEON	1
2	0512213	SWITCH, PIEZIO	2
3	0512232	LIGHT, INDICATOR, GREEN	2
4	0512226	SWITCH, ROCKER RND SPDT MOMENTARY	1
5	0501408	SCREW, TRUSS SLOT SS 8-32 X 1/4	2
6	0512448	LABEL, FACIA, UH200B, UH200	1
7	0312438	PANEL, FACIA, UH200B, UH200	1
8	0512357	SPACER	2
9	0503580	NUT, 10-32	2
10	0501563	SCREW, #8 X 3/8"	4
11	0512106	TEMPERATURE INDICATOR BD., DIGITAL	1
---	0512362	HARNESS, DIGITAL DISPLAY WIRING *(Not Shown)*	1

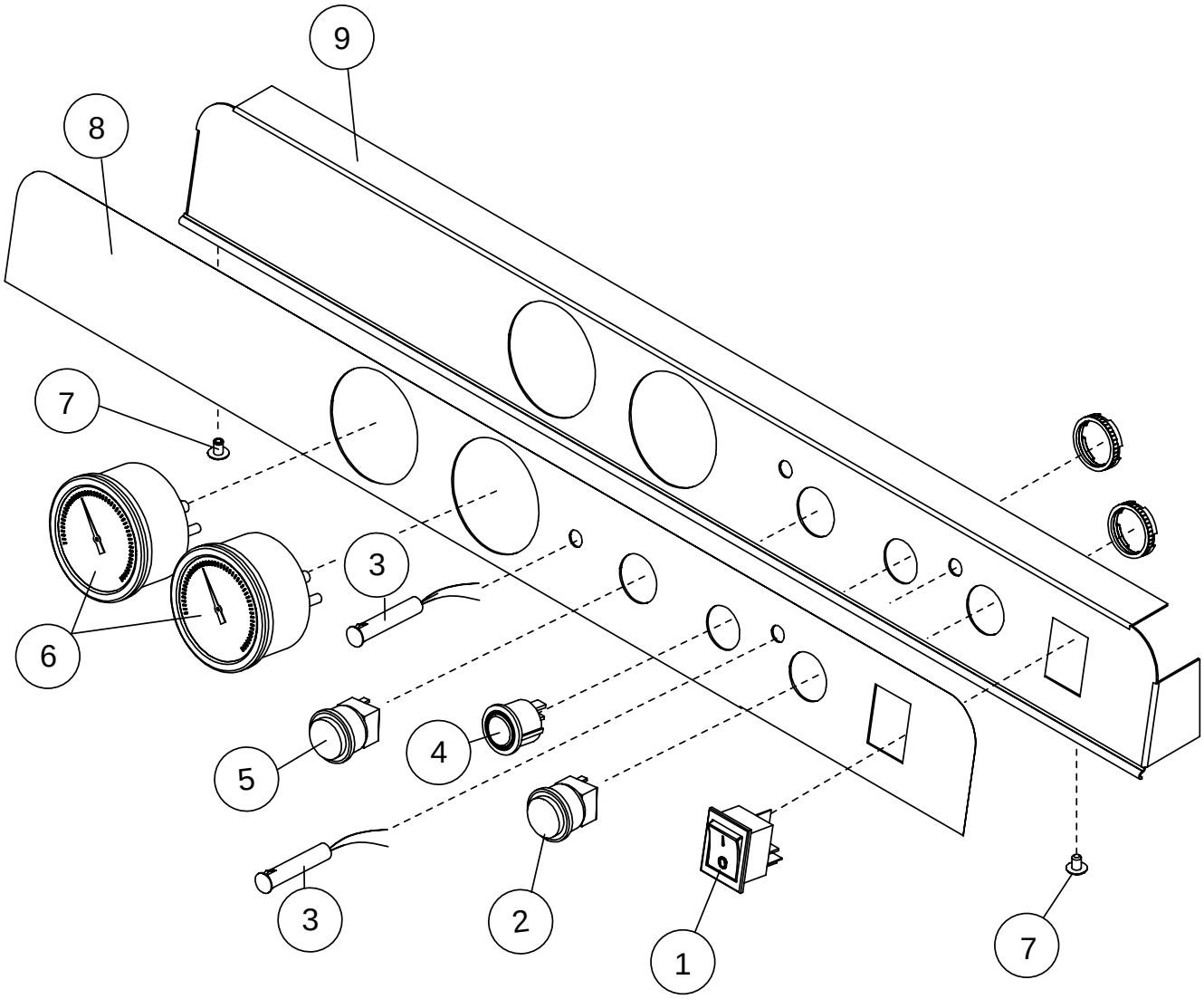
9
8
7
3
6
5
4
3
2
1
7

Item No.	Part No.	Description	Qty.
1	0512221	SWITCH, ROCKER DPDT 250V NEON	1
2	0512214	SWITCH, PUSH-BUTTON, GREEN	1
3	0512232	LIGHT, INDICATOR, GREEN	2
4	0512226	SWITCH, ROCKER RND SPDT MOMENTARY	1
5	0512215	SWITCH, PUSH-BUTTON, WHITE	1
6	0512107	THERMOMETER, 2" DIAL, 7" CAPILLARY	2
7	0501408	SCREW, TRUSS SLOT SS 8-32 X 1/4	2
8	0512449	LABEL, FACIA, UH170B, UH170	1
9	0312439	PANEL, FACIA, UH170B, UH170	1

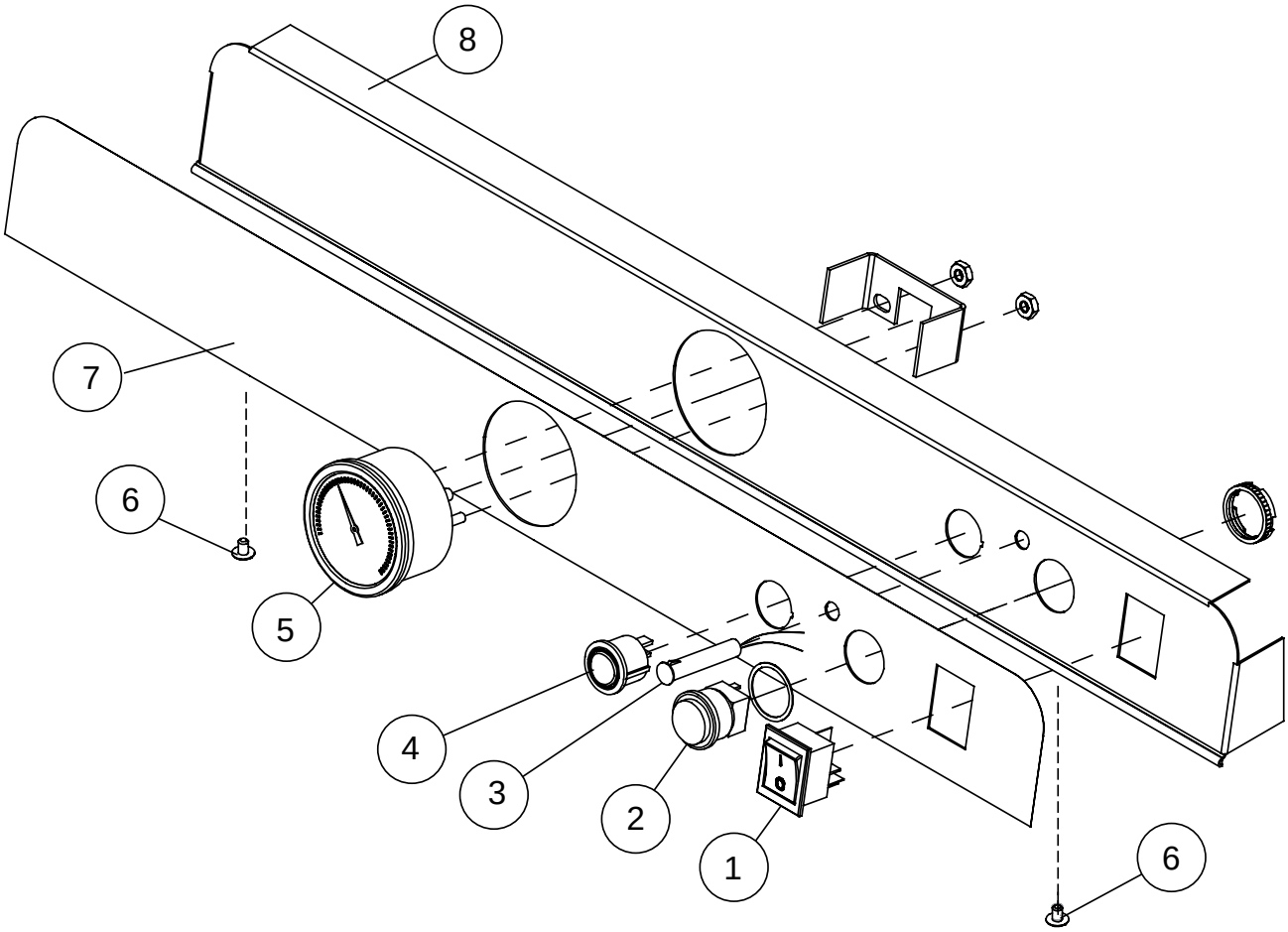
8
7
6
5
4
3
2
1
6

Item No.	Part No.	Description	Qty.
1	0512221	SWITCH, ROCKER DPDT 250V NEON (*UH100B, UH100)*	1
----	0512222	SWITCH, ROCKER DPDT 250V NEON (*UL100 ONLY)*	1
2	0512214	SWITCH, PUSH-BUTTON, GREEN	1
3	0512232	LIGHT, INDICATOR, GREEN	2
4	0512226	SWITCH, ROCKER RND SPDT MOMENTARY	1
5	0512107	THERMOMETER, 2" DIAL, 7" CAPILLARY	1
6	0501408	SCREW, TRUSS SLOT SS 8-32 X 1/4	2
7	0512453	LABEL, FACIA, UH100B, UH100, UL100	1
8	0312440	PANEL, FACIA, UH100B, UH100, UL100	1

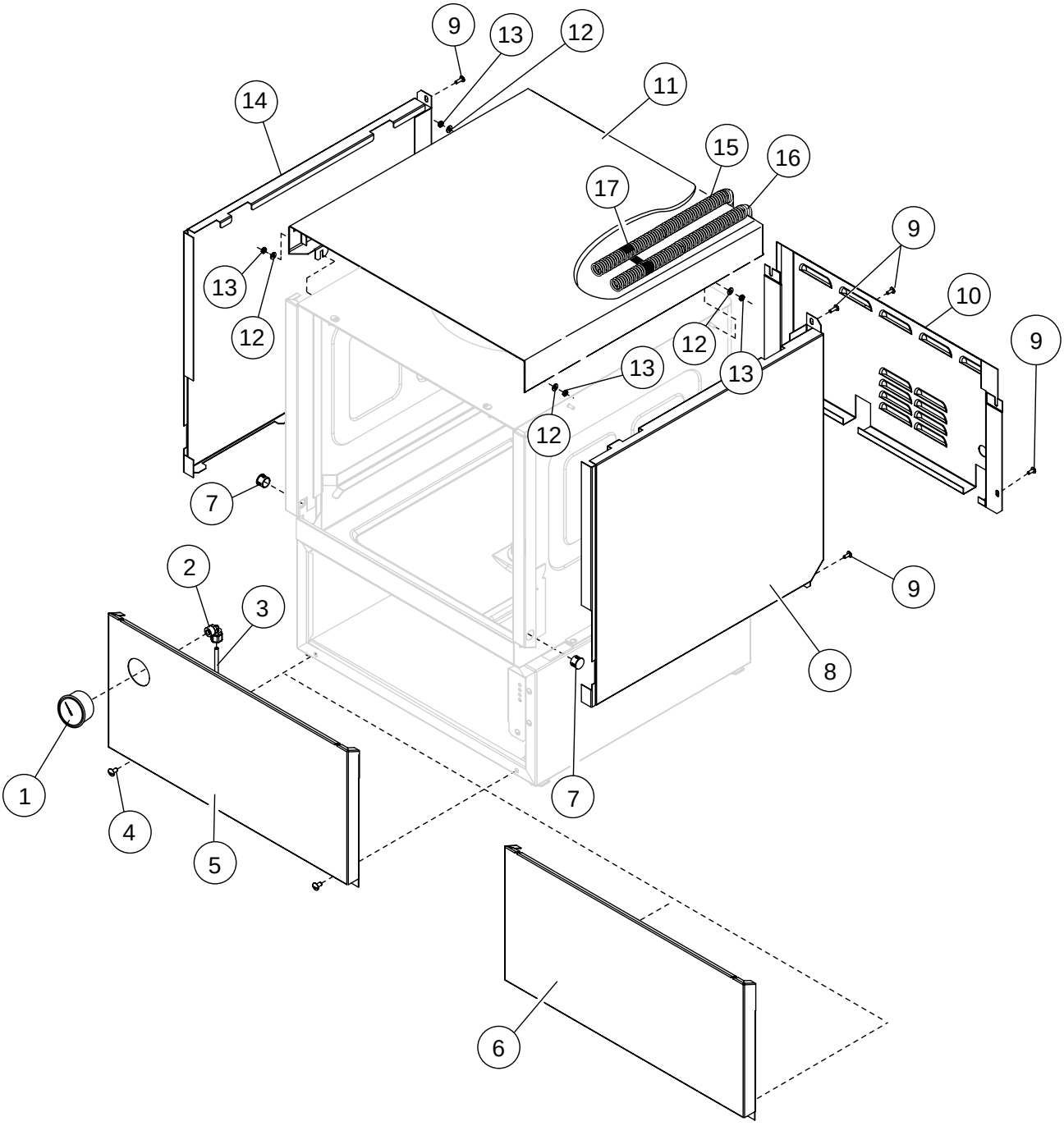
9
13
12
11
14
15
16
17
9
10
9
13
12
12
13
13
12
7
2
3
9
8
1
4
5
7
6

Item No.	Part No.	Description	Qty.
1	109812	GAUGE, PRESSURE 0-60PSI	1
2	111100	FITT COMP 1/4OD X 1/8MPT ELL J	1
3	107928	TUBING, 1/4i NATURAL	AR
4	100779	SCREW 1/4-20X5/8 TRUSS SS PHIL	6
5	0312192	PANEL, FRONT WITH GAUGE HOLE	1
6	0312330	PANEL, FRONT WITHOUT GAUGE HOLE	1
7	108826	GROMMET	2
8	0312174	PANEL, RH SIDE	1
9	100007	SCREW TRUSS SLOT SS 10-32X3/8	6
10	0312191	PANEL, BACK	1
11	0312437	HOOD, WELDED CHAMPION	1
12	0501478	WASHER, 17/64IDX9/16 OD18G SS	4
13	100003	NUT, HEX SS 1/4-20	4
14	0312175	PANEL, LH SIDE	1
15	0512757	CONDUIT, 1/2"	AR
16	0512758	CONDUIT, 3/8"	AR
17	0512369	CLAMP, CONDUIT	3

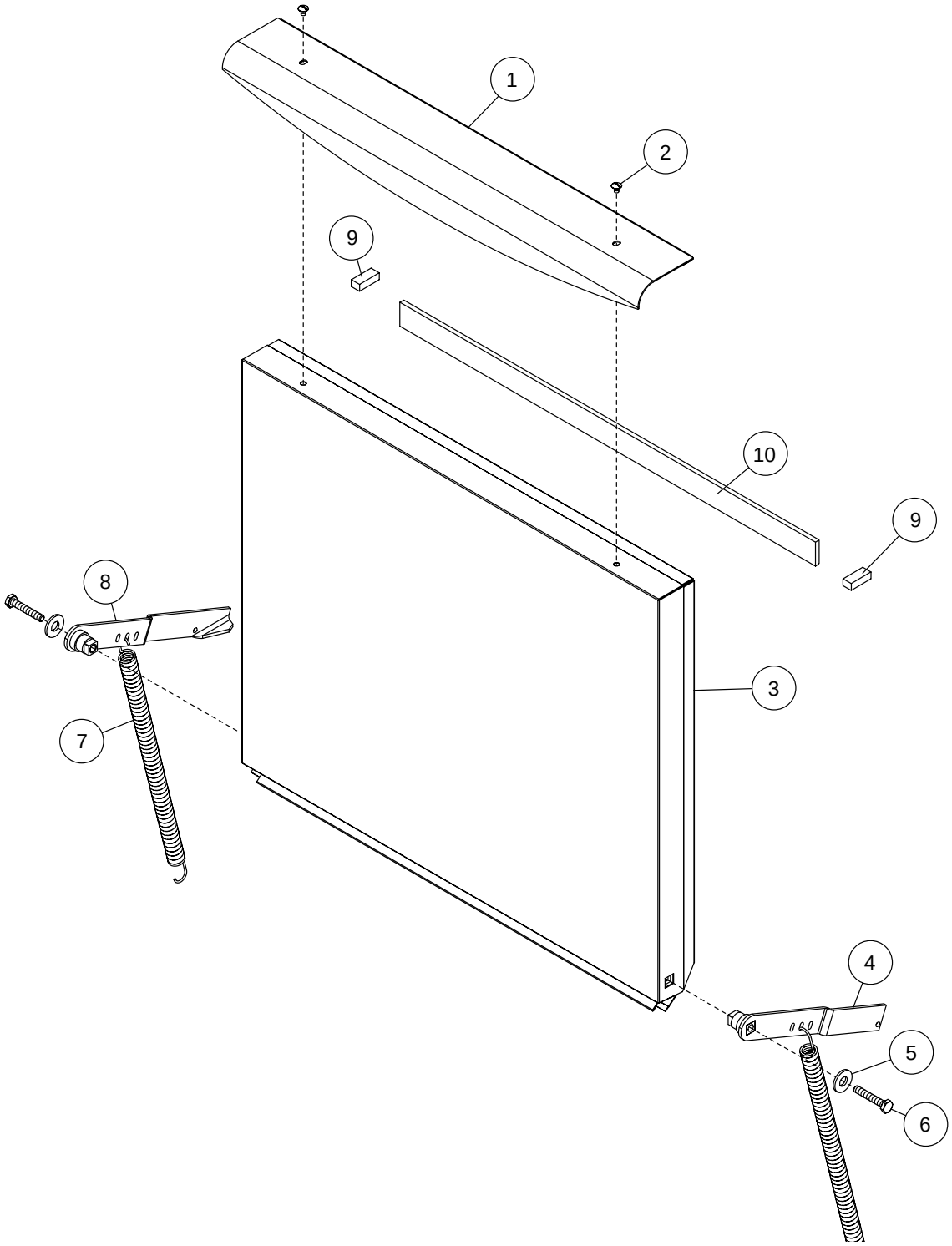
1
2
9
10
9
8
3
7
4
5
6

Item No.	Part No.	Description	Qty.
1	0312172	HANDLE, DOOR CHAMPION	1
2	0501408	SCREW, TRUSS SLOT SS 8-32 X 1/4	2
3	0712164	DOOR WELDED ASSY	1
4	0712162-1	HINGE, RH ASSY	1
5	106026	WASHER,SS 9/32 X 5/8 OD	1
6	0501422	BOLT, HEX SS 1/4-20 X 1-1/2	1
7	0512122	SPRING, DOOR	2
8	0712162	HINGE, LH ASSY	1
9	0512320	GASKET, STEAM BLOCK	2
10	0512319	GASKET, TOP DOOR	1

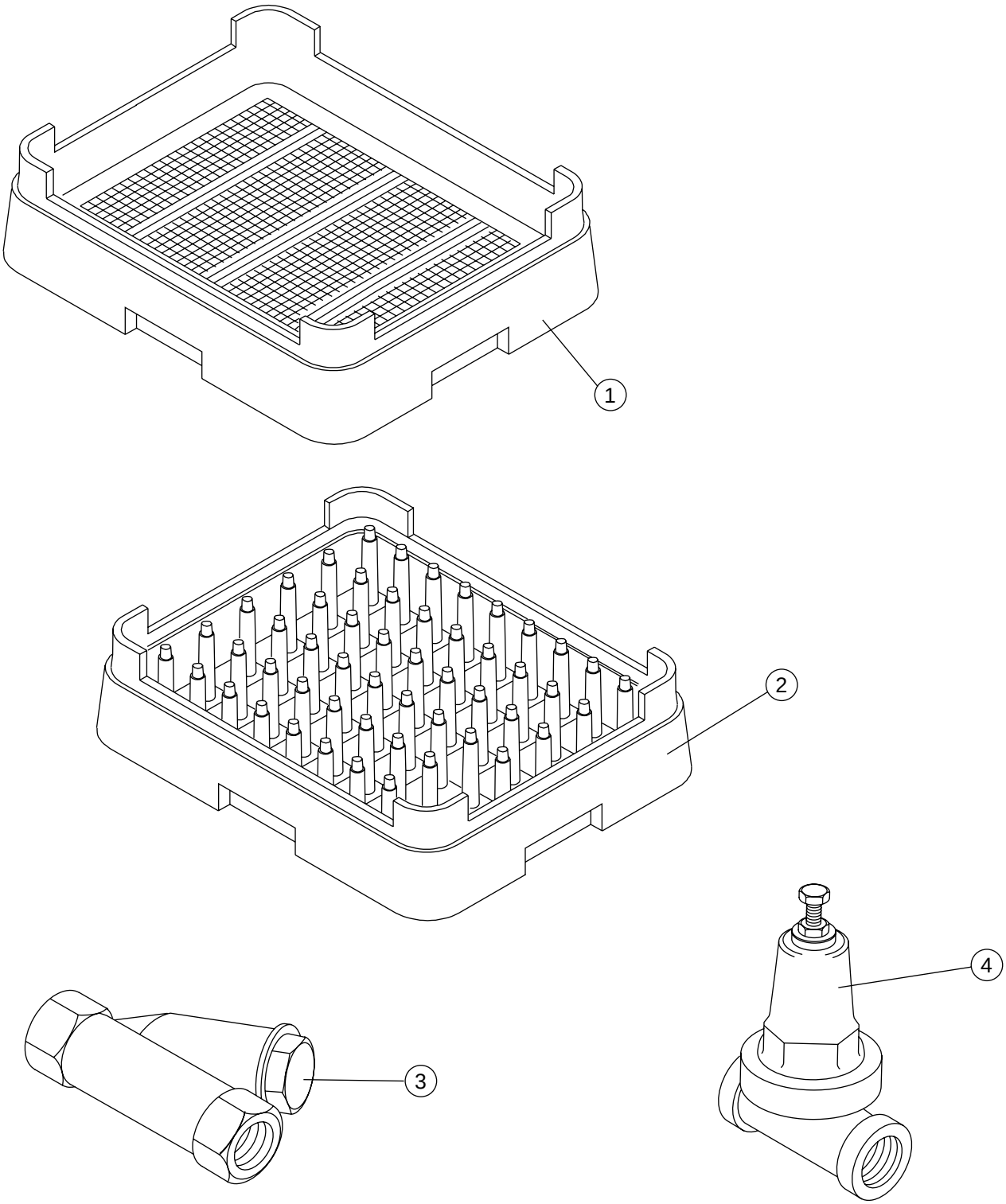
1
2
3
4

Item No.	Part No.	Description	Qty.
1	101273	DISH RACK, FLAT-BOTTOM	AR
2	101285	DISH RACK, PEG	AR
3	104421	STRAINER, LINE 1/2" BRONZE *(UH200B, UH170B)*	1
4	108265	VALVE, PRESSURE REGULATING (PRV) *(UH200B, UH170B)*	1

This Page Intentionally Left Blank

Electrical Schematics and Timing Charts

Illustrations ***Page***

Low Temperature Model - UL100 *(All S/N's)* 84

High Temperature Models - UH100B, UH100 *(Built prior to S/N W14236)* 85

High Temperature Models - UH100B, UH100 *(Beginning with S/N W14236 and above)* 86

High Temperature Models - UH170B, UH170 *(Built prior to S/N W14236)* 87

High Temperature Models - UH170B, UH170 *(Beginning with S/N W14236 and above)* 88

High Temperature Models - UH200B, UH200 *(Built prior to S/N W14236)* 89

High Temperature Models - UH200B, UH200 *(Beginning with S/N W14236 and above)* 90

Timing Charts 91

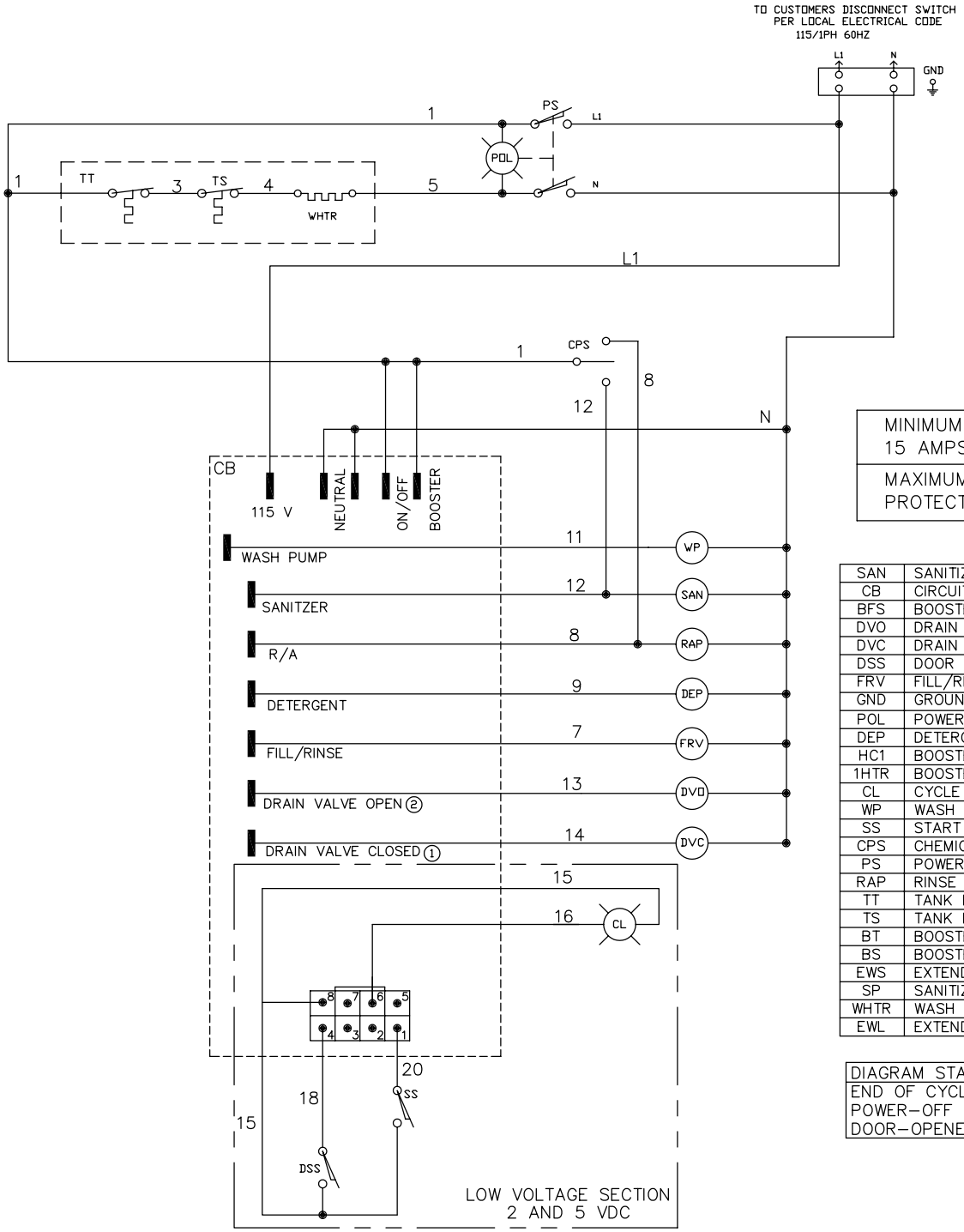

MINIMUM CIRCUIT AMPACITY 15 AMPS
MAXIMUM OVERCURRENT PROTECTION 15 AMPS

SAN	SANITIZER
CB	CIRCUIT BOARD
BFS	BOOSTER FILL SWITCH
DVO	DRAIN VALVE OPEN
DVC	DRAIN VALVE CLOSED
DSS	DOOR SAFETY SWITCH
FRV	FILL/RINSE VALVE
GND	GROUND
POL	POWER ON LIGHT
DEP	DETERGENT PUMP
HC1	BOOSTER CONTACTOR
1HTR	BOOSTER HEATER
CL	CYCLE LIGHT
WP	WASH PUMP
SS	START SWITCH
CPS	CHEMICAL PRIME SWITCH
PS	POWER ON SWITCH
RAP	RINSE AID PUMP
TT	TANK HEAT THERMOSTAT
TS	TANK HEAT SAFETY THERMOSTAT
BT	BOOSTER THERMOSTAT
BS	BOOSTER SAFETY THERMOSTAT
EWS	EXTENDED WASH SWITCH
SP	SANITIZER PUMP
WHTR	WASH TANK HEATER
EWL	EXTENDED WASH LIGHT

DIAGRAM STATE
END OF CYCLE
POWER–OFF
DOOR–OPENED

Low Temperature Undercounter - All S/N's

DATE	NUMBER/REV
20–JUN–06	0512089 REV 2

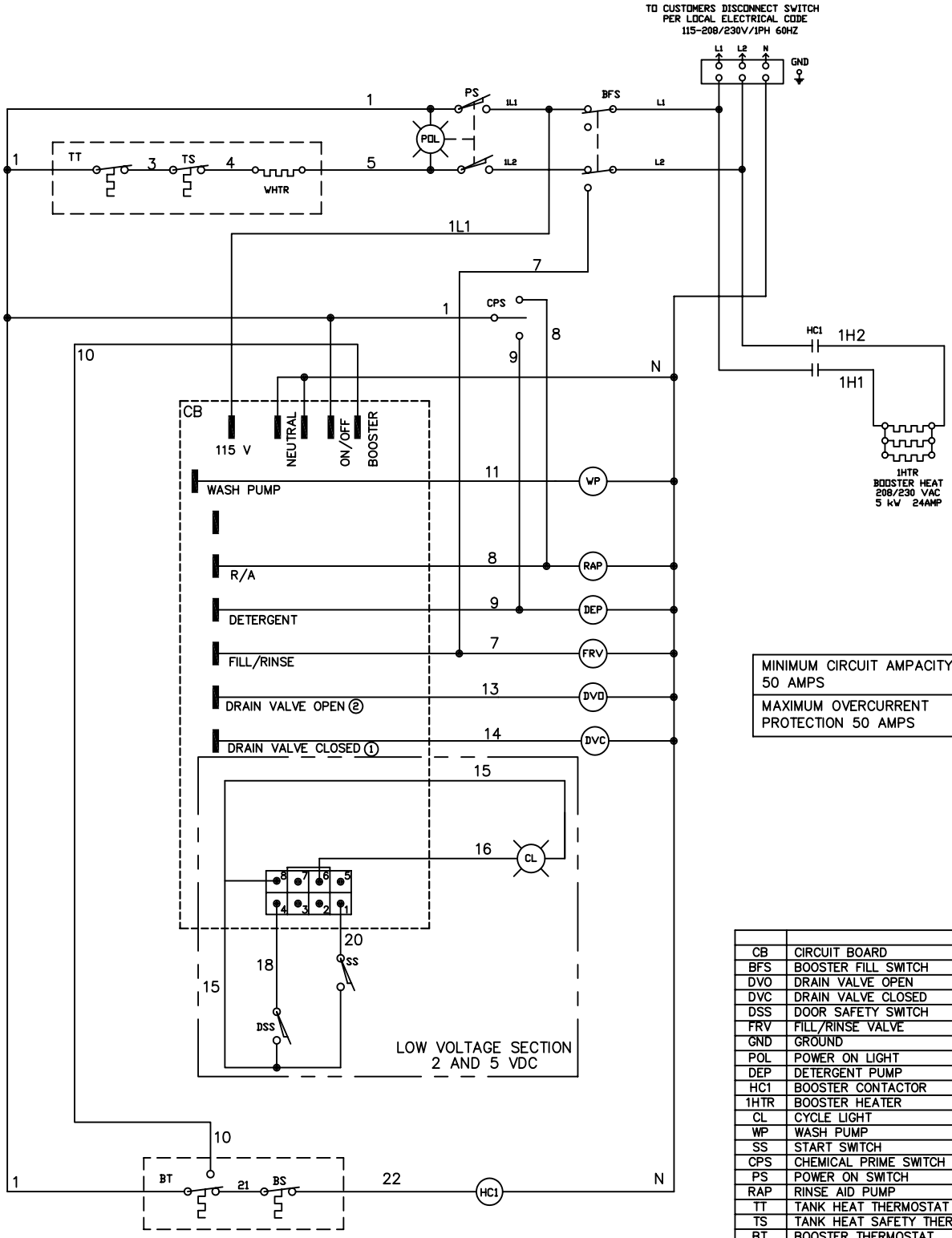

MINIMUM CIRCUIT AMPACITY 50 AMPS
MAXIMUM OVERCURRENT PROTECTION 50 AMPS

CB	CIRCUIT BOARD
BFS	BOOSTER FILL SWITCH
DVO	DRAIN VALVE OPEN
DVC	DRAIN VALVE CLOSED
DSS	DOOR SAFETY SWITCH
FRV	FILL/RINSE VALVE
GND	GROUND
POL	POWER ON LIGHT
DEP	DETERGENT PUMP
HC1	BOOSTER CONTACTOR
1HTR	BOOSTER HEATER
CL	CYCLE LIGHT
WP	WASH PUMP
SS	START SWITCH
CPS	CHEMICAL PRIME SWITCH
PS	POWER ON SWITCH
RAP	RINSE AID PUMP
TT	TANK HEAT THERMOSTAT
TS	TANK HEAT SAFETY THERMOSTAT
BT	BOOSTER THERMOSTAT
BS	BOOSTER SAFETY THERMOSTAT
EWS	EXTENDED WASH SWITCH
SP	SANITIZER PUMP
WHTR	WASH TANK HEATER
EWL	EXTENDED WASH LIGHT

UH100B, UH100 Built Prior to S/N W14236

HIGH TEMP F&D UNDERCOUNTER

DIAGRAM STATE
END OF CYCLE
POWER-OFF
DOOR-OPENED

DATE	NUMBER/REV
8-JUN-06	0512090 REV 2

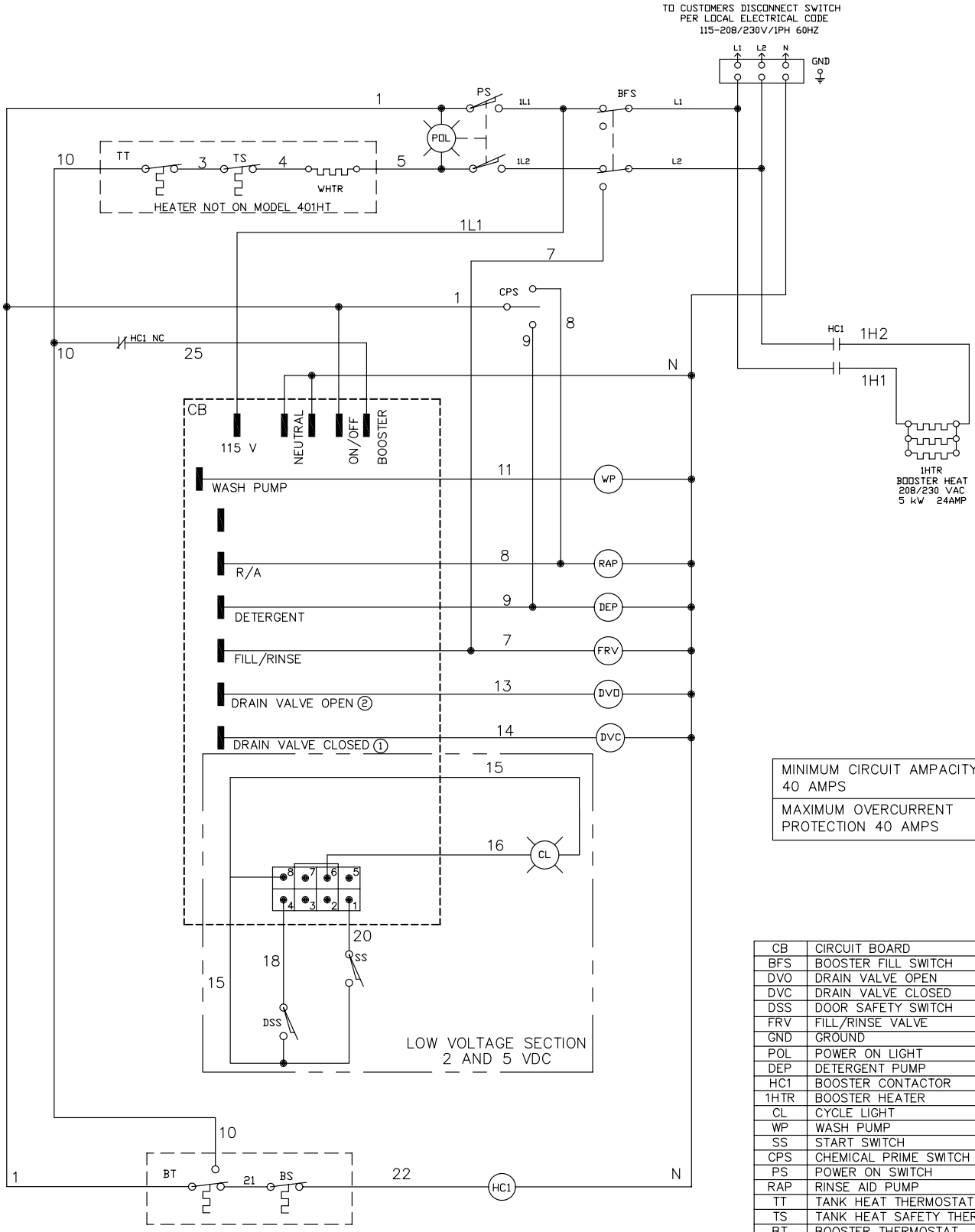

MINIMUM CIRCUIT AMPACITY 40 AMPS
MAXIMUM OVERCURRENT PROTECTION 40 AMPS

CB	CIRCUIT BOARD
BFS	BOOSTER FILL SWITCH
DVO	DRAIN VALVE OPEN
DVC	DRAIN VALVE CLOSED
DSS	DOOR SAFETY SWITCH
FRV	FILL/RINSE VALVE
GND	GROUND
POL	POWER ON LIGHT
DEP	DETERGENT PUMP
HC1	BOOSTER CONTACTOR
1HTR	BOOSTER HEATER
CL	CYCLE LIGHT
WP	WASH PUMP
SS	START SWITCH
CPS	CHEMICAL PRIME SWITCH
PS	POWER ON SWITCH
RAP	RINSE AID PUMP
TT	TANK HEAT THERMOSTAT
TS	TANK HEAT SAFETY THERMOSTAT
BT	BOOSTER THERMOSTAT
BS	BOOSTER SAFETY THERMOSTAT
EWS	EXTENDED WASH SWITCH
SP	SANITIZER PUMP
WHTR	WASH TANK HEATER
EWL	EXTENDED WASH LIGHT

For Machines beginning with S/N W14236 and above
HIGH TEMP F&D UNDERCOUNTER

DIAGRAM STATE
END OF CYCLE
POWER-OFF
DOOR-OPENED

DATE	NUMBER/REV
10-MAY-07	0512090 REV 4

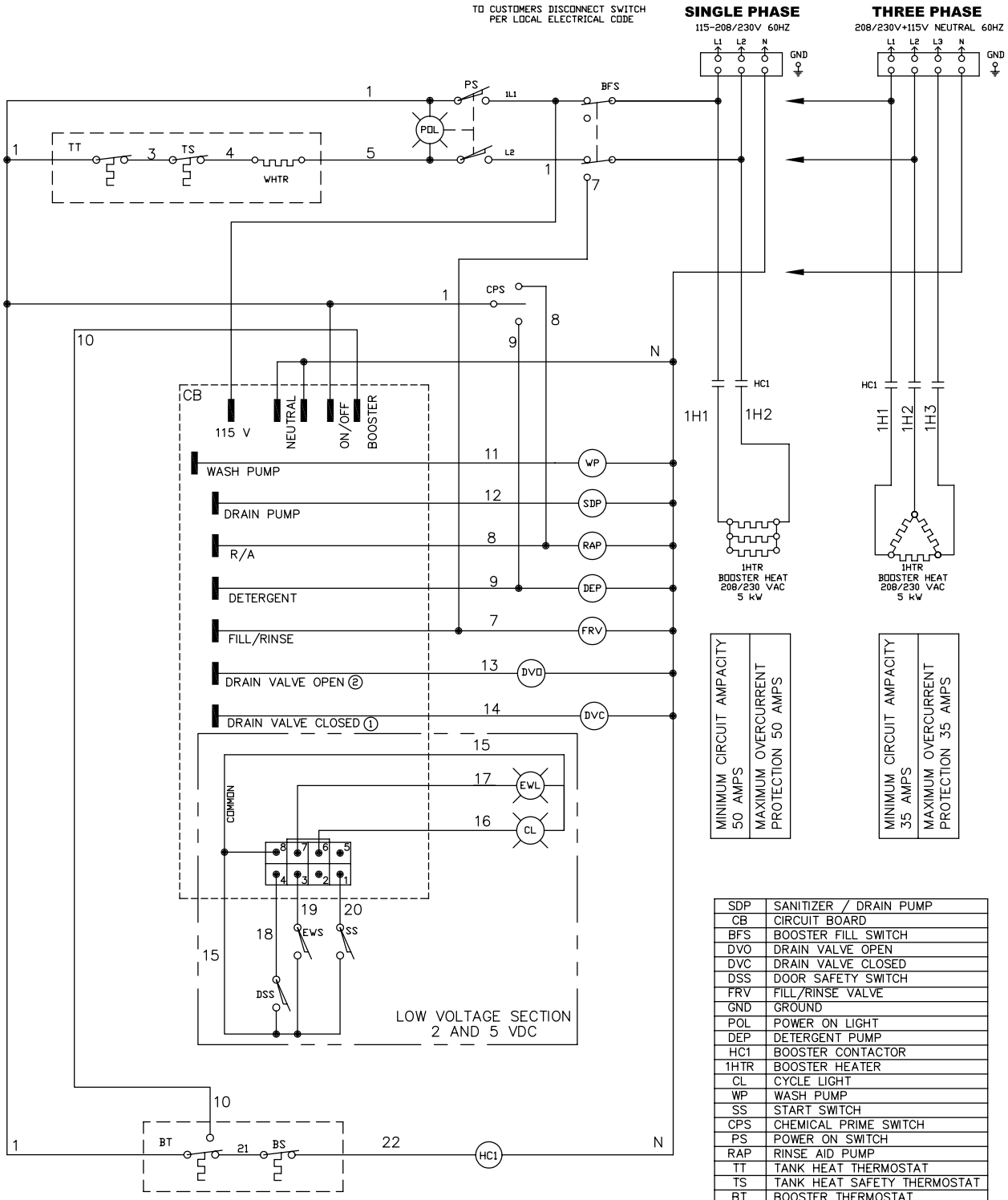

SDP	SANITIZER / DRAIN PUMP
CB	CIRCUIT BOARD
BFS	BOOSTER FILL SWITCH
DVO	DRAIN VALVE OPEN
DVC	DRAIN VALVE CLOSED
DSS	DOOR SAFETY SWITCH
FRV	FILL/RINSE VALVE
GND	GROUND
POL	POWER ON LIGHT
DEP	DETERGENT PUMP
HC1	BOOSTER CONTACTOR
1HTR	BOOSTER HEATER
CL	CYCLE LIGHT
WP	WASH PUMP
SS	START SWITCH
CPS	CHEMICAL PRIME SWITCH
PS	POWER ON SWITCH
RAP	RINSE AID PUMP
TT	TANK HEAT THERMOSTAT
TS	TANK HEAT SAFETY THERMOSTAT
BT	BOOSTER THERMOSTAT
BS	BOOSTER SAFETY THERMOSTAT
EWS	EXTENDED WASH SWITCH
SP	SANITIZER PUMP
WHTR	WASH TANK HEATER
EWL	EXTENDED WASH LIGHT

For Machines prior to S/N W14236
HIGH TEMP FWR UNDERCOUNTER

DIAGRAM STATE
END OF CYCLE
POWER-OFF
DOOR-OPEN

DATE	NUMBER/REV
29-MAY-06	0512091 REV 2

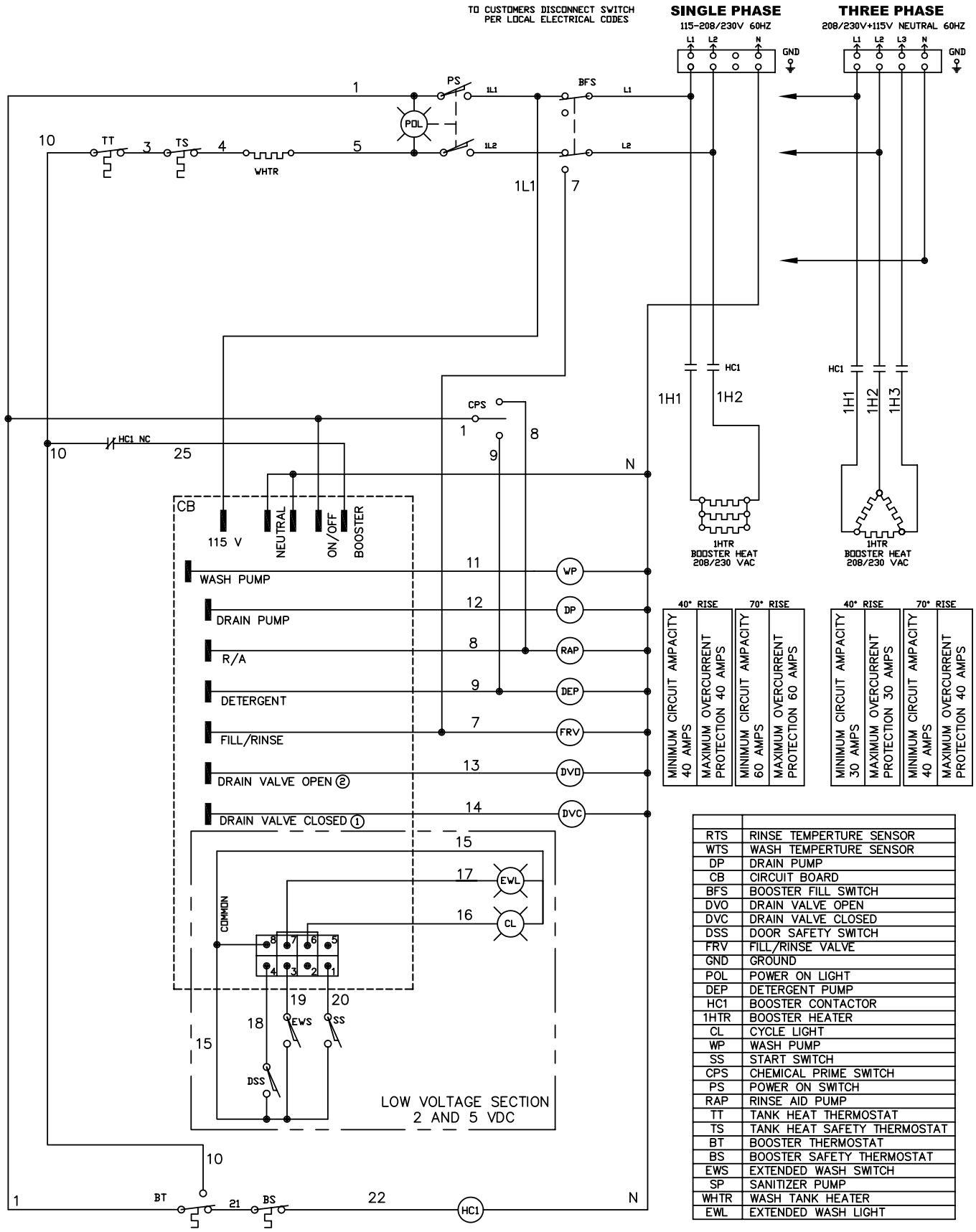

RTS	RINSE TEMPERTURE SENSOR
WTS	WASH TEMPERTURE SENSOR
DP	DRAIN PUMP
CB	CIRCUIT BOARD
BFS	BOOSTER FILL SWITCH
DVO	DRAIN VALVE OPEN
DVC	DRAIN VALVE CLOSED
DSS	DOOR SAFETY SWITCH
FRV	FILL/RINSE VALVE
GND	GROUND
POL	POWER ON LIGHT
DEP	DETERGENT PUMP
HC1	BOOSTER CONTACTOR
1HTR	BOOSTER HEATER
CL	CYCLE LIGHT
WP	WASH PUMP
SS	START SWITCH
CPS	CHEMICAL PRIME SWITCH
PS	POWER ON SWITCH
RAP	RINSE AID PUMP
TT	TANK HEAT THERMOSTAT
TS	TANK HEAT SAFETY THERMOSTAT
BT	BOOSTER THERMOSTAT
BS	BOOSTER SAFETY THERMOSTAT
EWS	EXTENDED WASH SWITCH
SP	SANITIZER PUMP
WHTR	WASH TANK HEATER
EWL	EXTENDED WASH LIGHT

UH170B, UH170 Beginning with S/N 14236

HIGH TEMP FWR UNDERCOUNTER

DIAGRAM STATE
END OF CYCLE
POWER-OFF
DOOR-OPEN

DATE	NUMBER/REV
18-OCT-07	0512091 REV 4

Item No.	Part No.	Description	Qty.

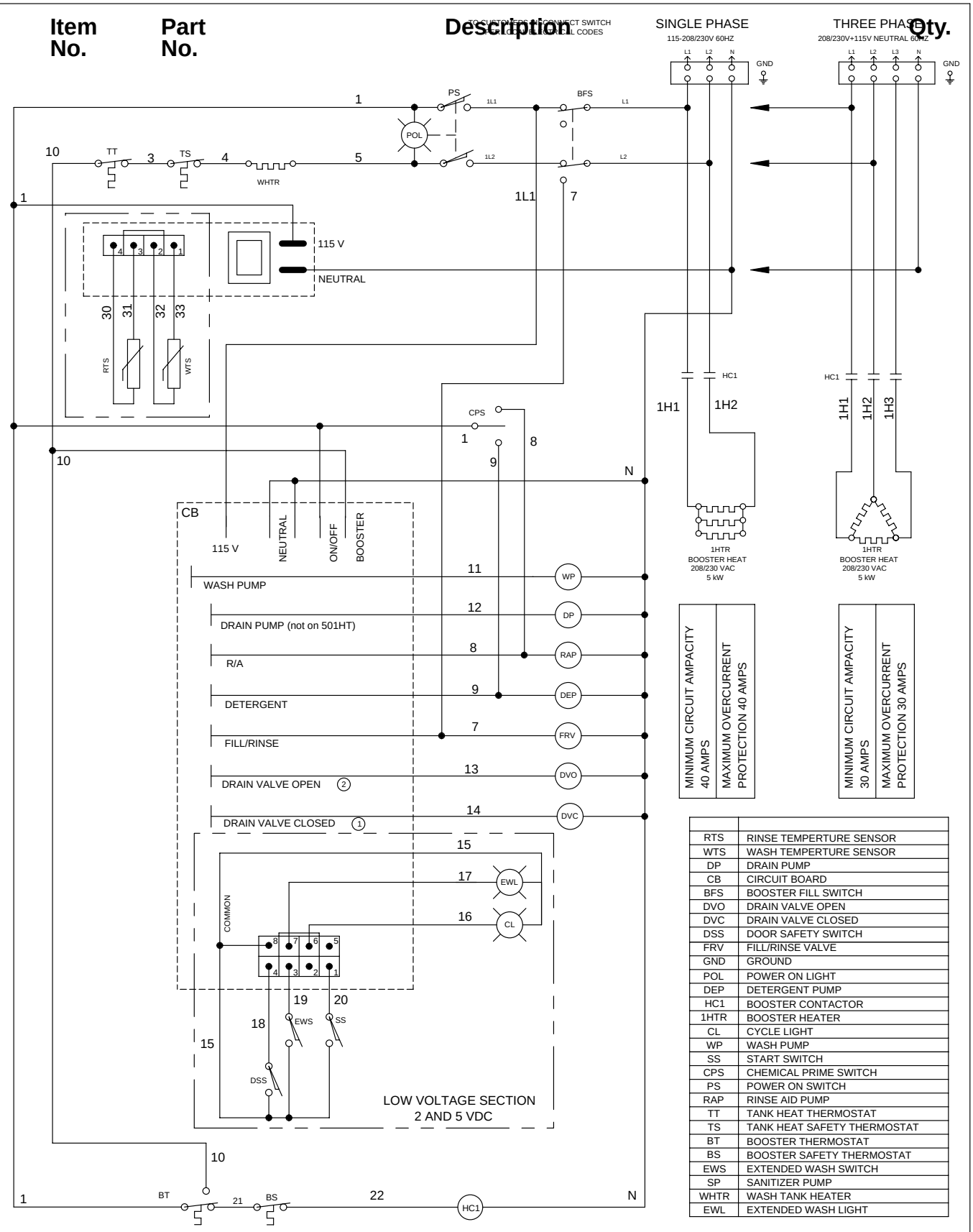

RTS	RINSE TEMPERTURE SENSOR
WTS	WASH TEMPERTURE SENSOR
DP	DRAIN PUMP
CB	CIRCUIT BOARD
BFS	BOOSTER FILL SWITCH
DVO	DRAIN VALVE OPEN
DVC	DRAIN VALVE CLOSED
DSS	DOOR SAFETY SWITCH
FRV	FILL/RINSE VALVE
GND	GROUND
POL	POWER ON LIGHT
DEP	DETERGENT PUMP
HC1	BOOSTER CONTACTOR
1HTR	BOOSTER HEATER
CL	CYCLE LIGHT
WP	WASH PUMP
SS	START SWITCH
CPS	CHEMICAL PRIME SWITCH
PS	POWER ON SWITCH
RAP	RINSE AID PUMP
TT	TANK HEAT THERMOSTAT
TS	TANK HEAT SAFETY THERMOSTAT
BT	BOOSTER THERMOSTAT
BS	BOOSTER SAFETY THERMOSTAT
EWS	EXTENDED WASH SWITCH
SP	SANITIZER PUMP
WHTR	WASH TANK HEATER
EWL	EXTENDED WASH LIGHT

Prior to S/N 14326
HIGH TEMP DIGITAL UNDERCOUNTER

DIAGRAM STATE
END OF CYCLE
POWER-OFF
DOOR-OPEN

DATE	NUMBER/REV
26-FEB-07	0512092 REV 3

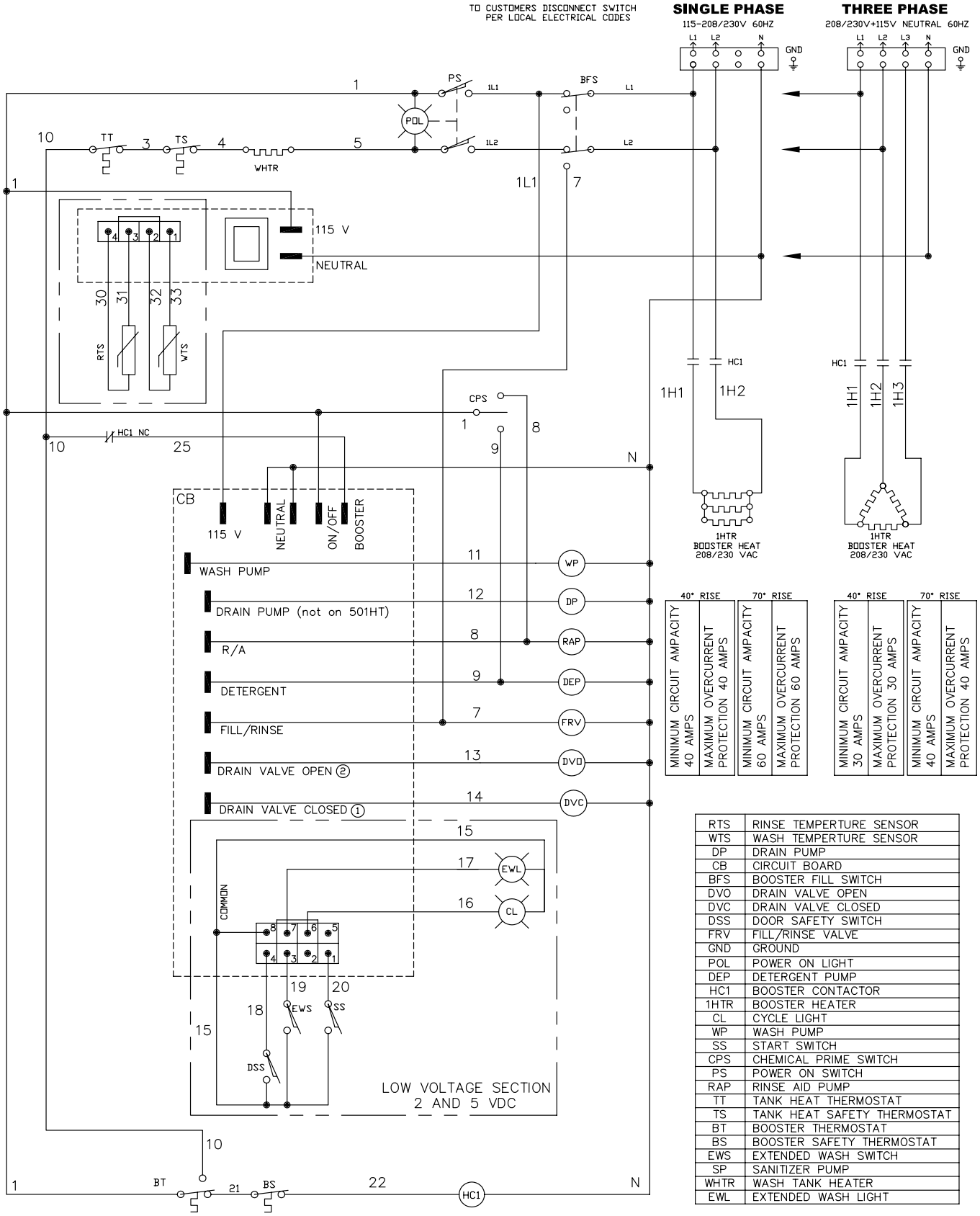

RTS	RINSE TEMPERTURE SENSOR
WTS	WASH TEMPERTURE SENSOR
DP	DRAIN PUMP
CB	CIRCUIT BOARD
BFS	BOOSTER FILL SWITCH
DVO	DRAIN VALVE OPEN
DVC	DRAIN VALVE CLOSED
DSS	DOOR SAFETY SWITCH
FRV	FILL/RINSE VALVE
GND	GROUND
POL	POWER ON LIGHT
DEP	DETERGENT PUMP
HC1	BOOSTER CONTACTOR
1HTR	BOOSTER HEATER
CL	CYCLE LIGHT
WP	WASH PUMP
SS	START SWITCH
CPS	CHEMICAL PRIME SWITCH
PS	POWER ON SWITCH
RAP	RINSE AID PUMP
TT	TANK HEAT THERMOSTAT
TS	TANK HEAT SAFETY THERMOSTAT
BT	BOOSTER THERMOSTAT
BS	BOOSTER SAFETY THERMOSTAT
EWS	EXTENDED WASH SWITCH
SP	SANITIZER PUMP
WHTR	WASH TANK HEATER
EWL	EXTENDED WASH LIGHT

Beginning with S/N 14236 and Above

HIGH TEMP DIGITAL UNDERCOUNTER

DIAGRAM STATE
END OF CYCLE
POWER-OFF
DOOR-OPEN

DATE	NUMBER/REV
18-OCT-07	0512092 REV 4

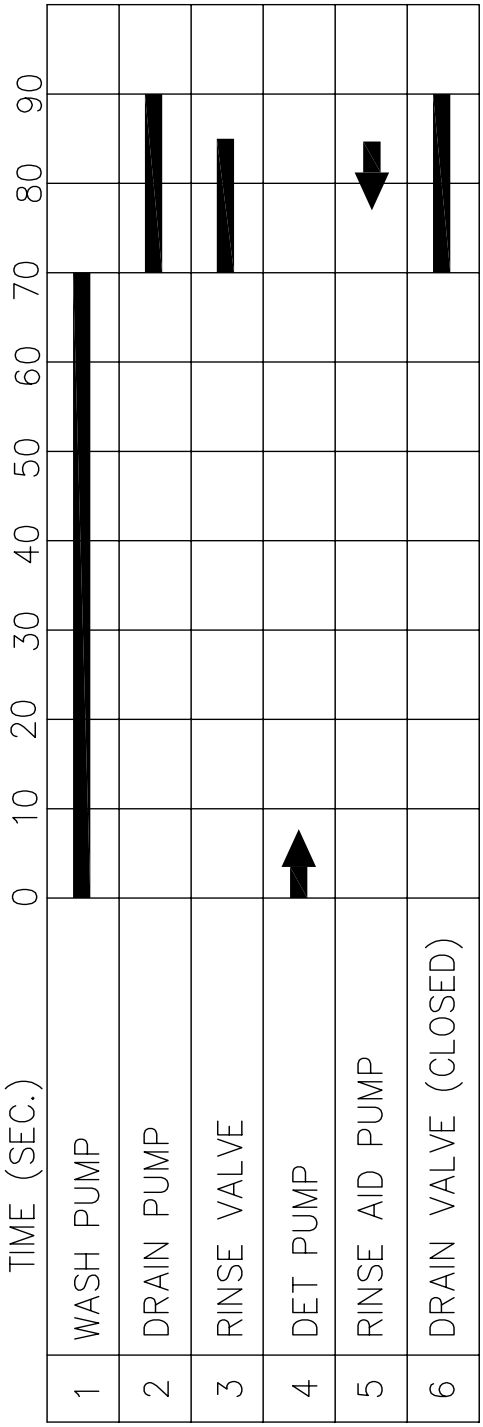

TIMING CHART FOR MODELS UH170, UH170B, UH200, UH200B

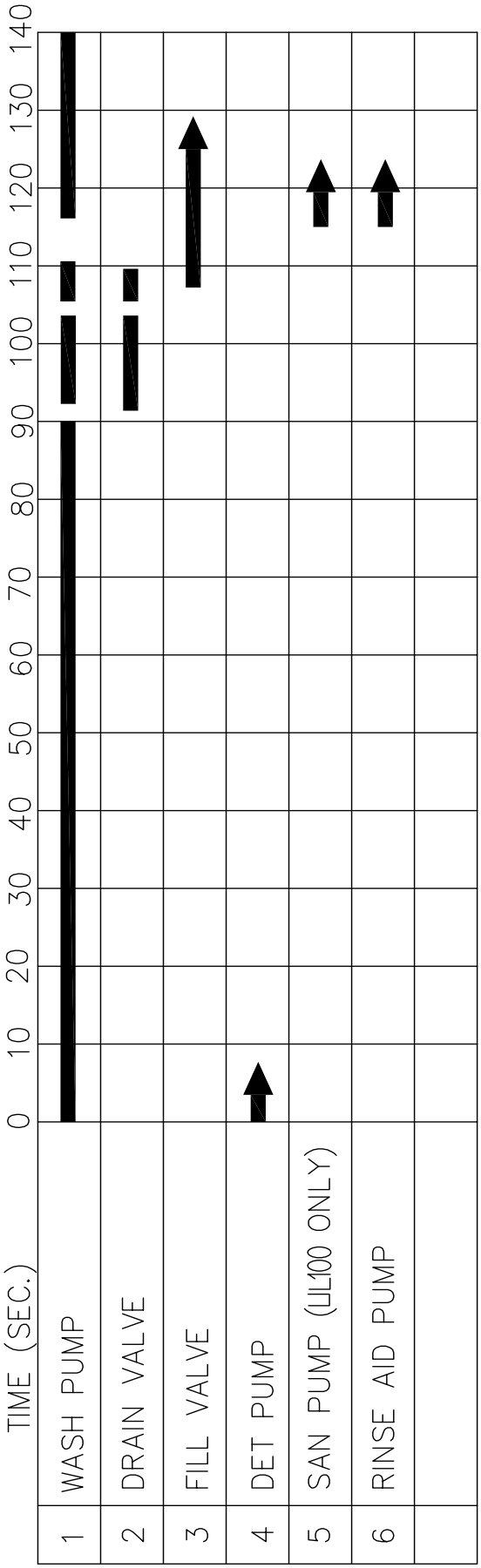

TIMING CHART FOR MODELS UL100, UH100, UH100B

This Page Intentionally left Blank

Basic Service

Illustration **Pg.**

Digital Temperature Display Board *(UH200B Only)*..... *94*

Digital Temperature Display Codes *(UH200B Only)*..... *95*

Timer Board Selector Switch *(All Models)*..... *96*

Timer Board Troubleshooting Guide *(All Models)*..... *97*

Timer Board Diagnostic Testing *(S/N W081217467 and above)*..... *98*

Champion® MOYER DIEBEL®
The Dishwashing and Glasswashing Machine Specialists

Service Bulletin
501HTM3, UH200B
April 2008

Part # 0512106 Digital Temperature Display Board

The digital temperature display board does not control temperature, and is not interfaced with the timer board.

- The wash display will update every 10 seconds
- The rinse display updates every 20 seconds if the temperature is below 170°F, and every second if the temperature is above 170°F

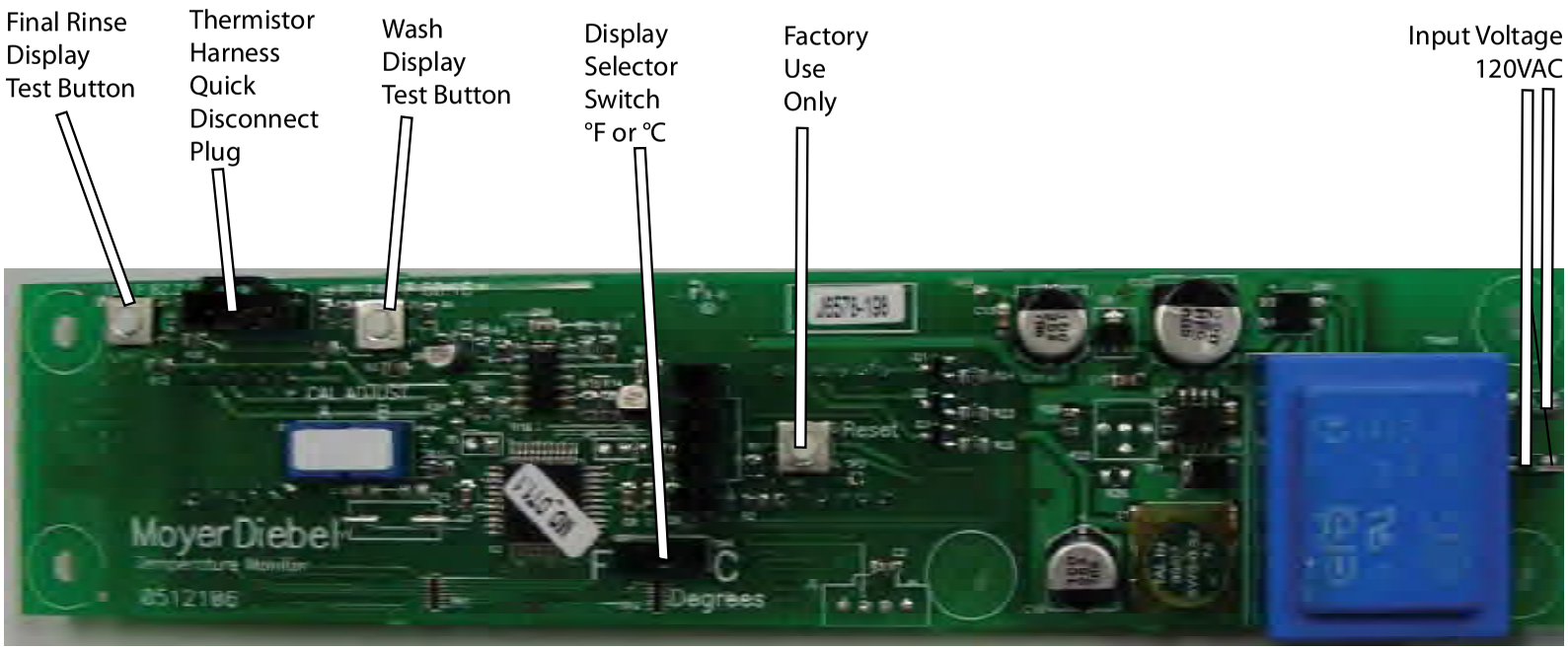

TEST PROCEDURE

1. Remove the thermistor harness. The final rinse and wash displays should both read “E”.
2. Press and hold the final rinse display test button. The **final rinse display** should read **179°F - 180°F**.
3. Press and hold the wash display test button for a **minimum** of **10 seconds**. The **wash display** should read **140°F**.
   Note: Temperature readings while testing are displayed in °F, even if the board is set for °C during the test mode.
4. If both the wash and final rinse displays indicate specified temperatures, the temperature display board is operating properly.

P/N 0512106 DIGITAL TEMPERATURE DISPLAY CODES

DISPLAY CODE	CAUSE
Wash Display	
Lo 188	Wash temperature is below 100°F
HHH 186	Wash temperature is above 180°F
dry 171	Wash tank has no water and heater is on
E 179	Bad booster thermistor Open or broken wire between thermistor and board Loose connection Wash tank has no water and is extremely hot
Rinse Display	
159 Lo	Booster temperature is below 100°F
156 HHH	Rinse temperature is above 200°F
149 dry	Booster tank has no water and heater is on
146 E	Bad booster thermistor Broken wire between thermistor and board Loose connection Booster tank is dry and extremely hot
Wash and Rinse Display	
E E	Thermistor quick disconnect plug on back of board is disconnected Booster tank and wash tank are both dry Broken wires on thermistor harness, or both thermistors are unplugged or defective
Lo Lo	Booster and wash tank temperature below 100°F
HHH HHH	Booster temperature above 200°F and wash tank temperature above 180°F

Timer Connection Diagram

Solid State Timer P/N 0512105

201, 401, 501, UH100, UH170, UH200

January 2009

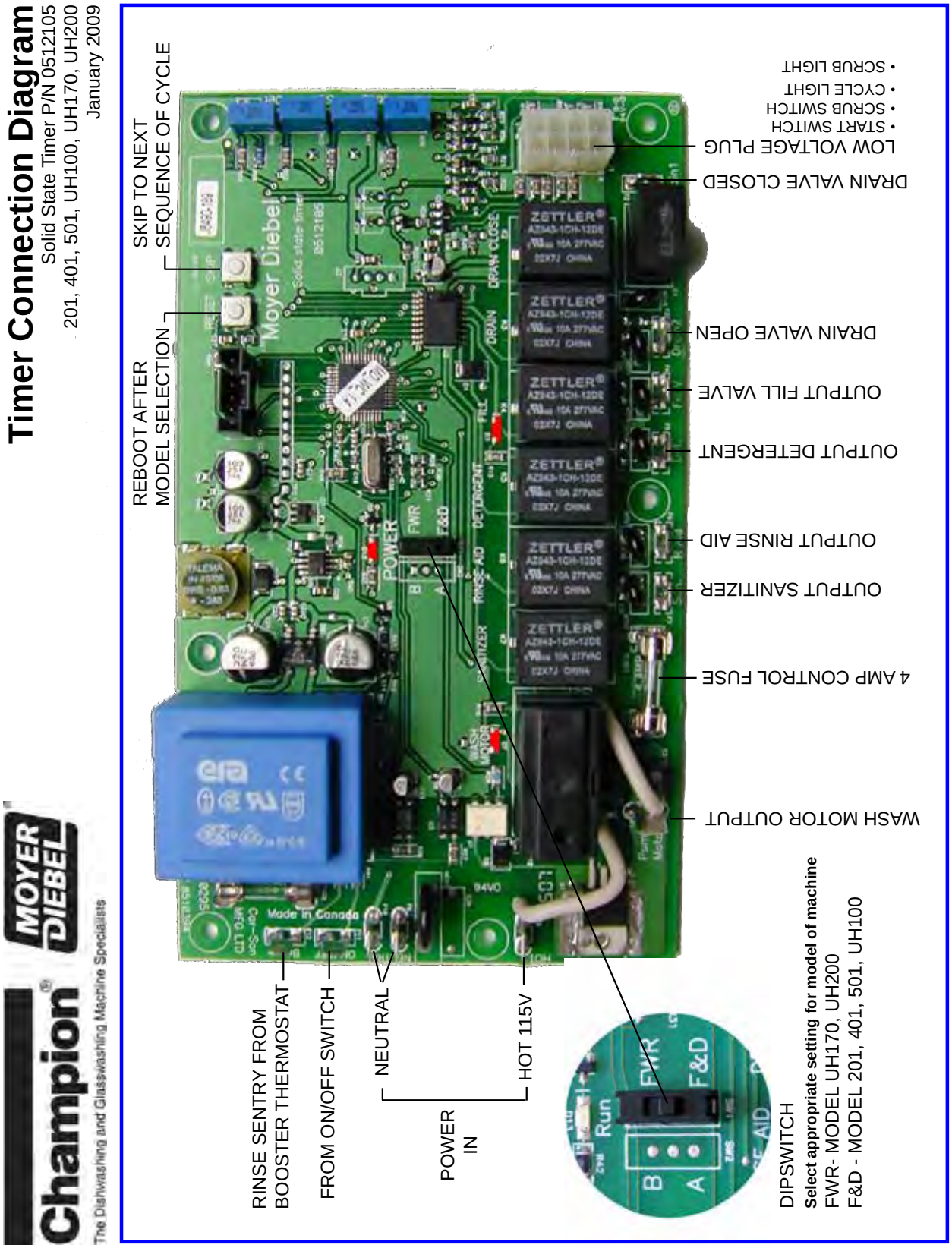

Champion® MOYER DIEBEL

The Dishwashing and Glasswashing Machine Specialists

Troubleshooting Guide

Troubleshooting Timer Board P/N 0712105
June 2010

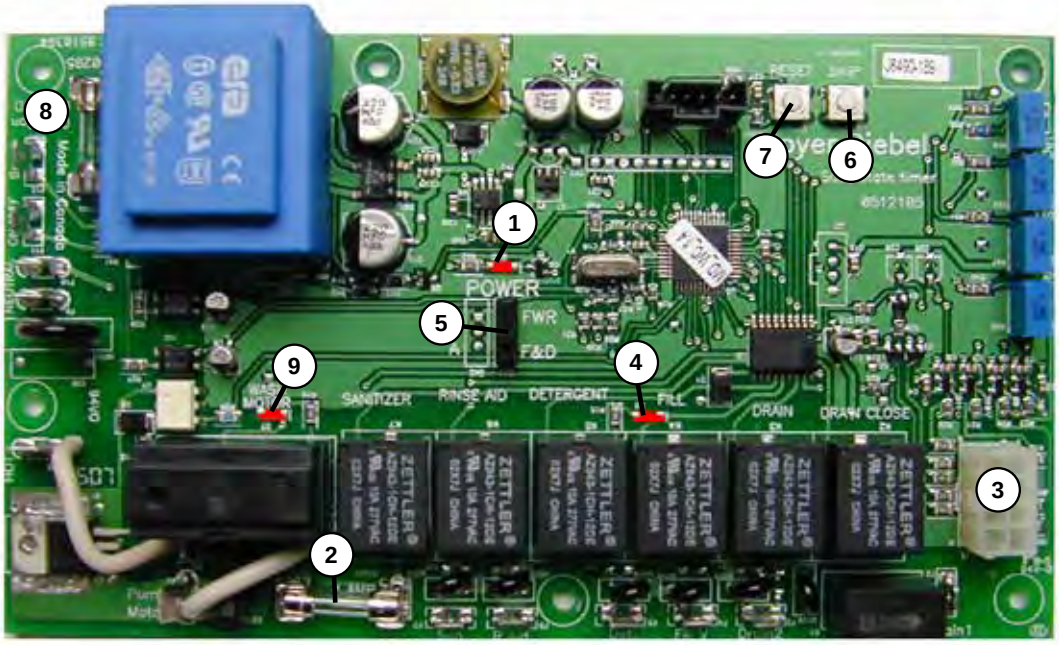

	Test/Condition	Indication/Cause	Recomendation/Solution
1.	Run LED is lit	Board has power	
	Machine is powered up and Run LED is not lit	Possible bad start switch, scrub switch or wiring short (does not apply to S.S. Pizio switch on model 501 or UH200)	Unplug low voltage plug. If Run LED lights up: The start switch or scrub switch failed in the closed position, or there is a wiring short
	Machine is powered up and Run LED is not lit after unplugging the low voltage plug		Check voltage
2.	Wash pump runs but nothing else works	4 amp board output fuse is blown	Replace the 4 amp fuse. Check for wiring problem
3.	Check continuity of the start switch	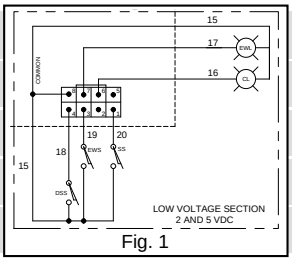 Fig. 1	Use plug pin #8, wire #15 as common to plug pin # 1, wire #20 (see Fig.1)
	Check continuity of the scrub switch		Use plug pin #8, wire #15 as common to plug pin # 3, wire #19 (see Fig.1)
	Check continuity of the cycle light		Use a meter with diode setting - to cycle light, plug pin # 6, wire #16 and common pin # 8, wire # 15
	Check continuity of the scrub light		Use a meter with diode setting - to scrub light, plug pin # 7, wire #17 and common pin # 8, wire # 15
	Check continuity of door safety switch		Use a meter with diode setting - to door safety switch, plug pin # 4, wire #18 and common pin # 8, wire # 15
4.	Fill LED is lit	Indicates output voltage to fill valve	
5.	Select the appropriate setting on the dipswitch for the model of machine the solid state timer will be installed in	*Note: This solid state timer board is used for several different models*	Set dipswitch to **FWR** for model UH170 and UH200 Set dipswitch to **F&D** for model 201, 401, 501, UH100
6.	Use the skip switch to force the timer to the next segment of the cycle		Eg: Pressing the skip switch immediately after starting the cycle will make the machine skip the wash cycle, and go straight into the drain cycle
7.	Use the reset button to reset the solid state timer board	The reset button will reboot the solid state timer board (much like rebooting your computer)	
8.	0.063 amp internal board supply fuse is blown		Replace the solid state timer board
9.	Wash motor LED is lit	Indicates output voltage to the wash motor during wash/rinse cycle only. *LED is not lit during soft start*	
	Wash motor LED is not lit, but wash motor runs continuously		Replace the board

Diagnostic Testing for p/n 0712105 Solid State Timer Board

- effective serial # W081217467 and up

1 Before testing, turn the power switch OFF and allow the machine to complete the drain cycle.

Check incoming voltages

2 Open the door

If the green cycle indicator light blinks, the DOOR SWITCH and CYCLE LIGHT work
Note: This function times out after 10 seconds

Close the door

3 Press and release the START SWITCH

If the green cycle indicator light flashes the start switch works

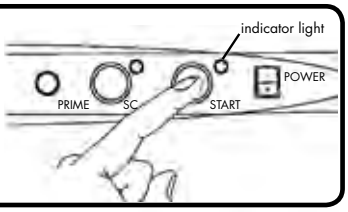

4 Press and release the SCRUB/EXT WASH switch if equipped

If the green indicator light for the scrub switch flashes, the scrub/ext wash switch works

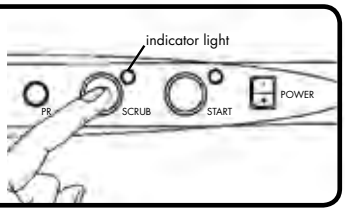

5 To test the timer board and the following components, press and release the start switch 3 times with the door closed

If the components listed below are operating properly, they should run consecutively for a few seconds each

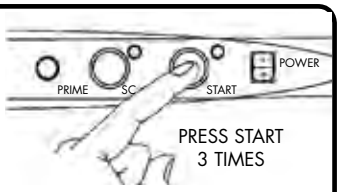

- fill valve
- detergent pump
- rinse-aid pump
- drain valve opens
- drain valve closes
- wash pump
- drain pump or sanitizer pump (if applicable)

If one or more components do not run, see below

CONDITION	POSSIBLE CAUSE/SOLUTION
One of the components in step 5 does not run	Check the component that did not run
The wash pump is the only component that runs	Check the 4 amp fuse on the timer board
The wash pump is the only component that will not run and the 4 amp fuse is good	Check pump motor/See troubleshooting guide
None of the components run in step 5	Check neutral wire/See troubleshooting guide

0512979

Commercial Kitchen Equipment Parts

Find more Champion equipment resources at

parthubz.com/equipment/champion

Need parts or service?

Call 833-700-8006

support@parthubz.com

parthubz.com