Commercial Kitchen Equipment Parts

CHAMPION UL130

Champion UL130 Installation Guide

Provided by PartHubz

parthubz.com

833-700-8006 | support@parthubz.com

Champion®

Installation/Operation Manual

UH130B

UH330B

Undercounter Dishwashers
M4 Series

UH130B M4
High Temperature
with built-in booster
Wash Refresh Final Rinse

UH130 M4
High Temperature
without built-in booster
Wash Refresh Final Rinse

UH230B M4
High Temperature
with built-in booster
Fresh Water Final Rinse

UH230 M4
High Temperature
without built-in booster
Fresh Water Final Rinse

UH330B M4.2
Condensate Removal
High Temperature
with built-in booster
Fresh Water Final Rinse

UL130 M4
Low Temperature
Chemical Sanitization
Wash Refresh Final Rinse

THE MODELS CONTAINED IN THIS MANUAL COMPLY WITH ANSI/ASSE 1001 & ANSI/ASSE 1004.

Issue Date: 8.17.17

Manual P/N 115440 rev. M

For machines beginning with S/N W140946406 and above

www.championindustries.com

3765 Champion Blvd.,
Winston-Salem, NC 27105
(336) 661-1556 Fax: (336) 661-1660
Toll-free: 1(800) 858-4477

2674 N. Service Road, Jordan Station
Ontario, Canada L0R 1S0
(905) 562-4195 Fax: (905) 562-4618
Toll-free: 1(800) 263-5798

Printed in the USA

The Spirit of Excellence

For future reference, record your dishwasher information in the box below.

Model Number_____ Serial Number_____

Voltage_____Hertz_____ Phase_____

Service Agent _____ Tel:_____

Parts Distributor _____ Tel:_____

National Service Department

In Canada:
Toll-free: (800) 263-5798
Tel: (905) 562-4195
Fax: (905) 562-4618
email: service@moyerdiebellimited.com

In the USA:
Toll-free: (800) 858-4477
Tel: (336) 661-1556
Fax: (336) 661-1660
email: service@championindustries.com

ATTENTION:

The model no., serial no., voltage, Hz and phase are needed to identify your machine and to answer questions.

The machine data plate is located on the lower front panel.

Please have this information ready if you call for service assistance.

ENERGY STAR

U.S. GREEN BUILDING COUNCIL MEMBER

The USGBC Member Logo is a trademark owned by the U.S. Green Building Council and is used by permission. The logo signifies only that Moyer Diebel is a USGBC member; USGBC does not review, certify or endorse the products or services offered by its members.

COPYRIGHT © 2017 All rights reserved Printed in the USA

Two ways to REGISTER YOUR PRODUCT and ACTIVATE YOUR WARRANTY.

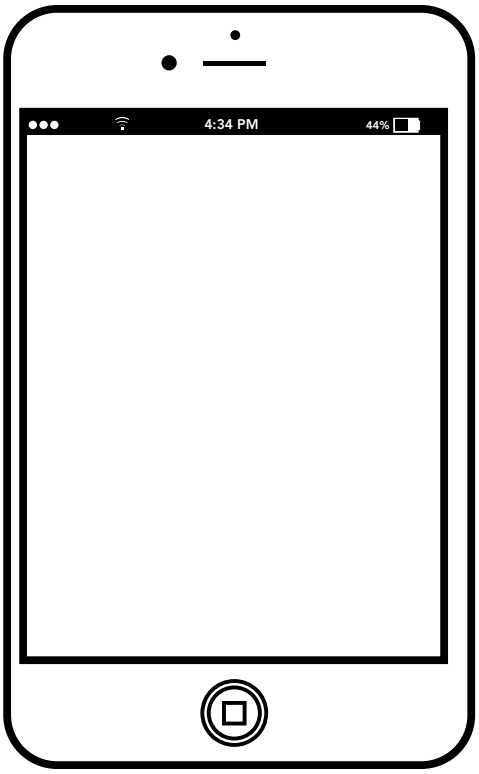

- Use your mobile or computer to go to our website at www.championindustries.com and register your product there.
- Use the fax form on the next page.

Champion®

The Dishwashing Machine Specialists

PRODUCT REGISTRATION BY FAX

COMPLETE THIS FORM AND FAX TO:

(336) 661-1660 in the USA

1-(800) 204-0109 in Canada

PRODUCT REGISTRATION CARD

Model	Serial #

Date of Installation: ___/___ /____

Company Name: _____

Address: _____ _____ _____
(Street) Province Postal Code

Telephone #: ( ) _____ --- _____

Contact: _____

Installation Company: _____

Address: _____

Telephone #: _____

Contact: _____

FAILURE TO REGISTER YOUR PRODUCT MAY VOID YOUR WARRANTY

IMPORTANT IMPORTANT

Revision History

A revision might be a part number change, a new instruction, or other information that was not available at print time. We reserve the right to make changes to these instructions without notice and without incurring any liability by making the changes. Equipment owners may request a revised manual, at no charge, by calling 1 (800) 858-4477 in the USA or by calling 1 (800) 263-5798 in Canada.

Revision Date	Revised Pages	Serial Number Effectivity	Revision Description
11.5.14	All	W140946406	Released First Edition
12.3.14	95-149	All	Revised UH330B Part Nos.
3.2.15	FC, i	All	Corrected Effective Serial Number
	154	All	Changed UH330B fuse to 6 Amp on the schematic
4.27.15	116,118,119	All	UH130, UH130B use 0706635 squeeze tube and pump
4.27.15	154	All	Updated UH330B ampacity charts
5.13.15	129	All	Changed 6A fuse P/N to 0513698
7.17.15	118-119	All	Added Item 23, Rinse Aid pump motor, P/NN0510872-1
8.31.15	122-123	All	Added P/N WS1 to Chemical Pump
	134-135	All	Revised Control Panel, changed P/N 0512213 to 0512214
	154	All	Added Chemical Alarm Schematic 0513371-1
10.21.15	114-115	W150954629	Added 5KW Booster Element 111235-1. Revised Rinse Aid Fittings.
11.11.15	84, 157	W150954629	Revised UH330B Timing Chart. Revised Wash Operation.
5.17.16	114-115	W150954629	Added Booster Service Kit, P/N 0714170 to Bstr. Added Insulation P/N 0512790
10.31.16	145	All	Changed Item 9 P/N to 0313404
3.20.17	99	All	Changed Item 15 to P/N 0513325
3.24.17	FC	All	Added ANSI/ASSE compliance note.
8.17.17	112-113	W170568116	Added UH330B M4.2 Final rinse piping
	116-117	W170568116	Added UH330B M4.2 Heat Recovery Assembly
	120-121	W170568116	Added UH330B M4.2 Booster Heater Assembly
	122-123	W170568116	Added UH330B M4.2 Booster Hoses and Level Sensor
	147	W170568116	Added UH330B M4.2 Control board
	152	W170568116	Revised Panel Assembly Illustration

LIMITED WARRANTY

Champion Industries (herein referred to as Champion), 3765 Champion Blvd., Winston-Salem, North Carolina 27105, and P.O. Box 301, 2674 N. Service Road, Jordan Station, Canada, L0R 1S0, warrants machines, and parts, as set out below.

Warranty of Machines: Champion warrants all new machines of its manufacture bearing the name "Champion" and installed within the United States and Canada to be free from defects in material and workmanship for a period of one (1) year after the date of installation or fifteen (15) months after the date of shipment by Champion, whichever occurs first. [See below for special provisions relating to glasswashers.]

Warranty registration must be submitted to Champion within ten (10) days after installation either online on the Champion Industries website (http://www.championindustries.com/register) in the USA or http://www.championindustries.com/canada/register in Canada or by fax on the form provided at the front of this manual. If warranty registration is not returned to Champion within such period, the warranty will expire after one year from the date of shipment.

Champion will not assume any responsibility for extra costs for installation in any area where there are jurisdictional problems with local trades or unions. If a defect in workmanship or material is found to exist within the warranty period, Champion, at its election, will either repair or replace the defective machine or accept return of the machine for full credit; provided; however, as to glasswashers, Champion's obligation with respect to labor associated with any repairs shall end (a) 120 days after shipment, or (b) 90 days after installation, whichever occurs first. In the event that Champion elects to repair, the labor and work to be performed in connection with the warranty shall be done during regular working hours by a Champion authorized service technician. Defective parts become the property of Champion. Use of replacement parts not authorized by Champion will relieve Champion of all further liability in connection with its warranty. In no event will Champion's warranty obligation exceed Champion's charge for the machine. The following are not covered by Champion's warranty:

a. Lighting of gas pilots or burners.
b. Cleaning of gas lines.
c. Replacement of fuses or resetting of overload breakers.
d. Adjustment of thermostats.
e. Adjustment of clutches.
f. Opening or closing of utility supply valves or switching of electrical supply current.
g. Cleaning of valves, strainers, screens, nozzles, or spray pipes.
h. Performance of regular maintenance and cleaning as outlined in operator's guide.
i. Damages resulting from water conditions, accidents, alterations, improper use, abuse, tampering, improper installation, or failure to follow maintenance and operation procedures.
j. Wear on Pulper cutter blocks, pulse vanes, and auger brush.

Examples of the defects not covered by warranty include, but are not limited to: (1) Damage to the exterior or interior finish as a result of the above, (2) Use with utility service other than that designated on the rating plate, (3) Improper connection to utility service, (4) Inadequate or excessive water pressure, (5) Corrosion from chemicals dispensed in excess of recommended concentrations, (6) Failure of electrical components due to connection of chemical dispensing equipment installed by others, (7) Leaks or damage resulting from such leaks caused by the installer, including those at machine table connections or by connection of chemical dispensing equipment installed by others, (8) Failure to comply with local building codes, (9) Damage caused by labor dispute.

Warranty of Parts: Champion warrants all new machine parts produced or authorized by Champion to be free from defects in material and workmanship for a period of 90 days from date of invoice. If any defect in material and workmanship is found to exist within the warranty period Champion will replace the defective part without charge.

DISCLAIMER OF WARRANTIES AND LIMITATIONS OF LIABILITY. CHAMPION'S WARRANTY IS ONLY TO THE EXTENT REFLECTED ABOVE. CHAMPION MAKES NO OTHER WARRANTIES, EXPRESS OR IMPLIED, INCLUDING, BUT NOT LIMITED, TO ANY WARRANTY OF MERCHANTABILITY, OR FITNESS OF PURPOSE. CHAMPION SHALL NOT BE LIABLE FOR INCIDENTAL OR CONSEQUENTIAL DAMAGES. THE REMEDIES SET OUT ABOVE ARE THE EXCLUSIVE REMEDIES FOR ANY DEFECTS FOUND TO EXIST IN CHAMPION DISHWASHING MACHINES AND CHAMPION PARTS, AND ALL OTHER REMEDIES ARE EXCLUDED, INCLUDING ANY LIABILITY FOR INCIDENTALS OR CONSEQUENTIAL DAMAGES.

Champion does not authorize any other person, including persons who deal in Champion dishwashing machines to change this warranty or create any other obligation in connection with Champion Dishwashing Machines.

Table of Contents

Models UH130, UH130B, UH230, UH230B, UL130, UH330B

Revision History i
Limited Warranty ii
Model Descriptions v

Installation - Models UH130, UH130B, UH230, UH230B 1

Receiving - Models UH130, UH130B, UH230, UH230B, UL130 1
Placement - Models UH130, UH130B, UH230, UH230B, UL130 1
Electrical Connections UH130, UH230 1 Phase w/o Booster 2
Electrical Connections UH130B, UH230B 1 and 3 PH Wiring Diagrams 3
Connecting Incoming Power to the Main Terminal Block (1 and 3 PH) 4
Booster Heater Conversion from 1 to 3 PH 7
Water Connections - Models UH130, UH130B, UH230, UH230B 10
Drain Connection - Models UH130, UH130B, UH230, UH230B 11
Booster Fill Switch - (Filling the booster for the first time) UH130B, UH230B Only 14
Chemical Connections - Models UH130, UH130B, UH230, UH230B 16
Pumps and Injection Points - Detergent and Rinse-aid Dispensing Pumps 17
Pump Priming - Detergent and Rinse-aid Dispensing Pumps 19
Pump and Fill Adjustments - Detergent and Rinse-aid Dispensing Pumps 20

Operation - Models UH130, UH130B, UH230, UH230B 22

Loading Dish Racks - All Models 22
Normal Wash Mode - Models UH130 and UH130B Only 24
Normal Wash Mode - Models UH230 and UH230B Only 25
Rinse Sentry Mode - UH130B and UH230B 26
Extended Wash Mode - Models UH230 and UH230B Only 26
Drain Mode - All Models 27

Cleaning - Models UH130, UH130B, UH230, UH230B 28

Cleaning the Wash Tank - All Models 28
Cleaning the Wash Arms - All Models 29
Cleaning the Rinse Arms - Models UH230, UH230B Only 30
Cleaning Scrap Screen and Sump Strainer - All Models 31
Deliming - Models UH130, UH130B 32
Deliming - Models UH230, UH230B 33

Maintenance - Models UH130, UH130B, UH230, UH230B 34

Daily, Weekly, Monthly 34

continued on next page

Table of Contents (continued)

Models UL130, UH330B

Installation - UL130 35

Receiving 1
Placement 1
(Single Phase) Electrical Connections 36
Water Connection 37
Drain Connection 38
Pumps and Injection Points - Detergent, Rinse-aid and Sanitizer Dispensing Pumps 40
Pump Priming - Detergent, Rinse-aid and Sanitizer Dispensing Pumps 42
Pump and Tank Fill Adjustments 43

Operation - UL130 44

Loading Dish Racks 44
Normal Wash Mode 45
Extended Wash Mode 46
Drain Mode 47

Cleaning - UL130 48

Cleaning the Wash Tank 48
Cleaning the Wash Arms 48
Deliming 50

Maintenance - UL130 52

Maintenance - Daily, Weekly, Monthly 52

Troubleshooting- UH130, UH130B, UH230, UH230B, UL130 53

Installation - Model UH330B 65

Receiving - All Models 66
Placement - All Models 66
Electrical Connections - UH330B with Booster 1PH and 3PH Wiring Diagram 67
Connecting Incoming Power to the Main Terminal Block 1PH and 3PH 68
Booster Heater Conversion from 1PH to 3PH Operation 71
Completing the 1PH to 3PH Electrical Conversion 73
Water Connection 74
Drain Connection 75
Chemical Connections - Chemical Injection Points 78
Pump Priming - Detergent and Rinse-aid Dispensing Pumps 79
Pump Adjustments - Detergent and Rinse-aid Dispensing Pumps 80

Table of Contents (continued)

Model UH330B

Operation - Model UH330B 82

Loading Dish Racks 82
Control Panel and Wash Mode 84
Rinse Sentry Mode 85
Drain Mode 86

Cleaning - Model UH330B 87

Cleaning the Wash Tank 87
Cleaning the Rinse Arms 88
Cleaning the Wash Arms 88
Cleaning the Scrap Screen and Sump Strainer 89
Deliming 90

Maintenance - Model UH330B 91

Daily, Weekly, Monthly 91

Troubleshooting - UH330B 92

UH330B M4.2 Fill Sequence 94

Electrical Schematics and Timing Charts 95

UH130B
Wash Refresh Pumped Final Rinse
High temperature hot water sanitizing dishwasher with built-in 40°F/22°C rise booster heater or 70°F/39°C rise booster heater.
Two built-in chemical dispensing pumps.
Field convertible from single phase to three phase operation.
208-240VAC/60/1 and 3 phase

UH230B
Fresh Water Final Rinse
High temperature hot water sanitizing dishwasher with built-in 40°F/22°C rise booster heater or 70°F/39°C rise booster heater.
Two built-in chemical dispensing pumps - Detergent, Rinse-aid
Field convertible from single phase to three phase operation.
208-240VAC/60/1 and 3 phase

UH130
Wash Refresh Final Rinse
High temperature hot water sanitizing dishwasher without built-in booster heater.
Two built-in chemical dispensing pumps - Detergent, Rinse-aid.
208-240VAC/60/1

UH230
Fresh Water Final Rinse
High temperature hot water sanitizing dishwasher without built-in booster heater.
Two built-in chemical dispensing pumps - Detergent, Rinse-aid.
208-240VAC/60/1

UL130
Chemical Sanitizing Wash Refresh Final Rinse
Low temperature chemical sanitizing dishwasher with three built-in chemical dispensing pumps - Detergent, Rinse-aid, sanitizer.
120VAC/60/1

UH330B
Heat Recovery/Condensate Removal with Dry Assist
Fresh Water Pumped Final Rinse
High temperature hot water sanitizing dishwasher with built-in electric booster.
Two built-in chemical dispensing pumps - Detergent, Rinse-aid
Field convertible from single phase to three phase operation.
208-240VAC/60/1 and 3 phase

Optional Equipment *(consult factory)*
Peg dish rack - P/N 101285
Flat-bottom dish rack - P/N 101273
70°F/39°C rise built-in booster heater (UH-230B, and UH130B Only) c
17" Stand
6" Stand

Receiving - UH130, UH130B, UH230, UH230B, UL130

NOTE:
The installation of your dishwasher must be performed by qualified service personnel familiar with food service equipment and must comply with all local health codes.
Problems due to improper installation are not covered by the Limited Warranty.

NOTE:
The installation of the dishwasher must comply with all local electrical, plumbing, health and safety codes or in the absence of local codes, installed in accordance with the applicable requirements in the National Electrical Code, NFPA 70, Canadian Electrical Code (CEC), Part 1, CSA C22.1; and the Standard for Ventilation Control and Fire Protection of Commercial Cooking Operations, NFPA 96.

Placement - UH130, UH130B, UH230, UH230B, UL130

CAUTION:
Be careful when lifting and moving the dishwasher to prevent damage to the machine.

1. Inspect the outside of the dishwasher carton for signs of damage.
2. Remove the carton and inspect the dishwasher for damage.
3. Check for any options or accessories that may have shipped with your dishwasher.
4. Compare the installation site utility connections with the dishwasher utility connections and make sure they are the same.
5. The dishwasher can be installed as a free-standing unit or under a counter-top. The typical counter-top height in most locations is 34" [86cm].
6. It is highly recommended that the underside of the counter-top be clad in metal.
7. Under counter installations should provide storage space for the dishwasher chemical supply containers. Do not elevate the containers above the finished floor.
8. Chemical supply containers should be placed as close to the machine as possible and the chemical tubing taped to the back of the machine should be repositioned before permanently placing the machine.
9. Place the dishwasher in its permanent location.
10. The dishwasher has 4 adjustable feet for leveling.
11. Level the dishwasher front-to-back and side-to-side.

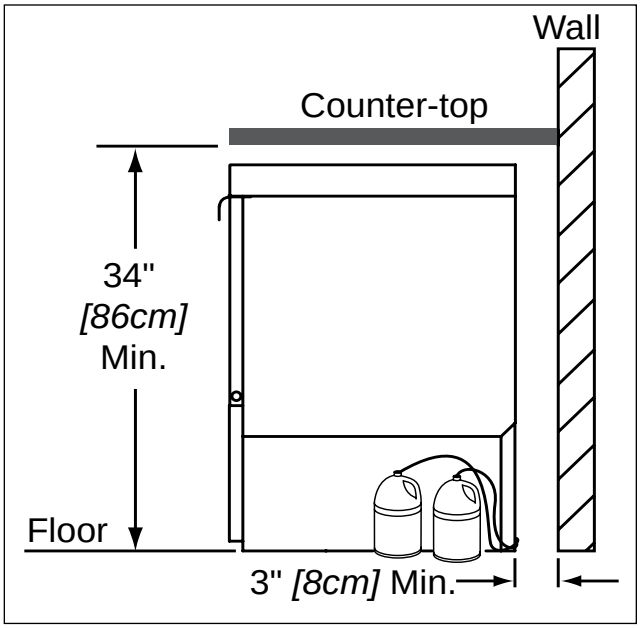

Electrical Connections - UH130, UH230 1PH without Built-in Booster

WARNING:
Electrocution or serious injury may result when working on an energized circuit.

Disconnect power at the main breaker or service disconnect switch before working on the circuit.

Lock-out and tag the breaker or service disconnect switch to indicate that work is being performed on the circuit.

Refer to the connection diagram below for single a phase machine without a built-in booster.

1. A three prong 4 foot power cord and plug is prewired with the machine for connection to a 115VAC power source.

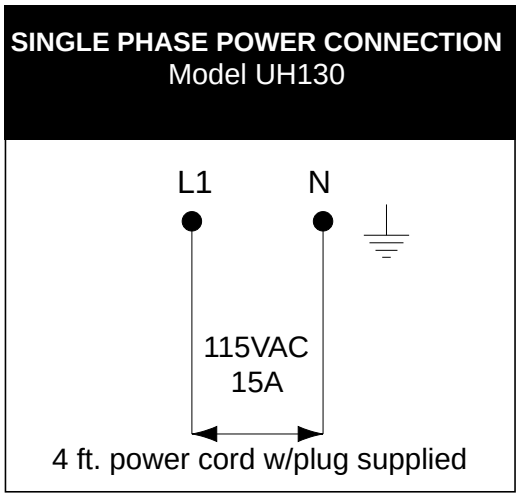

! ATTENTION !
Models UH130 without a built-in booster are equipped with a 4 ft. power cord and plug. These models require a 115VAC,15A receptacle.

! ATTENTION !
A qualified electrician must connect the main incoming power to the dishwasher in accordance with all local codes and regulations or in the absence of local codes in accordance with the National Electrical Code or the Canadian Electrical Code.

Electrical Connections - UH130B, UH230B with Built-in Booster 1PH and 3PH Wiring Diagrams

! ATTENTION !

ALL DISHWASHERS ARE SHIPPED FROM THE FACTORY WIRED FOR SINGLE PHASE OPERATION UNLESS SPECIFIED AT THE TIME OF ORDER.

IF YOU ARE CONVERTING A SINGLE PHASE MACHINE TO THREE PHASE BE SURE TO FOLLOW THE BOOSTER WIRING INSTRUCTIONS ON PAGES 7-8.

Refer to the connection diagrams below to connect main incoming power to the dishwasher.

THREE PHASE POWER CONNECTION
Models UH130B and UH230B

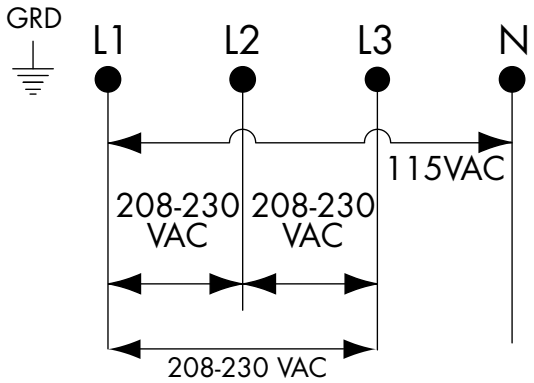

! VERY IMPORTANT !

THE ELECTRICAL POWER MUST BE A 4-WIRE PLUS GROUND SUPPLY WHICH INCLUDES A CURRENT CARRYING NEUTRAL.

HOW TO CONNECT 3 PHASE POWER

1. Check the data plate on the front of the dishwasher for the phase of the machine.

If the data plate says the machine is 3 Phase, then connect a 3 PH power supply.

2. Remove the lower access panel.
3. Pull power connection box forward and out.
4. The Main Terminal Block has terminals for L1, L2, L3, Neutral and Ground.
5. Connect ground, then connect L1, L2, L3 to 208-230VAC.
6. Connect a current carrying neutral to N.
7. Main power connections are complete.

SINGLE PHASE POWER CONNECTION
Models UH130B and UH230B

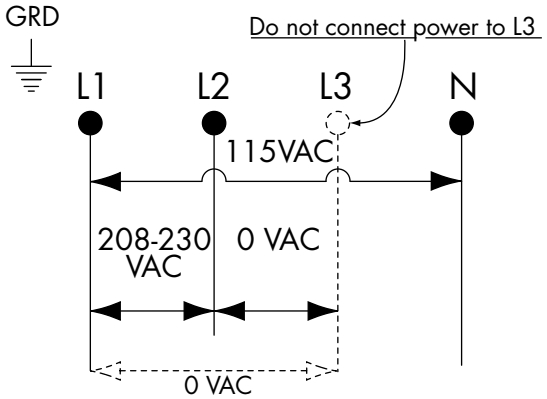

! VERY IMPORTANT !

THE ELECTRICAL POWER MUST BE A 3-WIRE PLUS GROUND SUPPLY WHICH INCLUDES A CURRENT CARRYING NEUTRAL.

HOW TO CONNECT 1 PHASE POWER

1. Check the data plate on the front of the dishwasher for the phase of the machine.

If the data plate says the machine is 1 Phase, then connect a 1 PH power supply.

2. Remove the lower access panel.
3. Pull power connection box forward and out.
4. The Main Terminal Block has connections for L1, L2, L3, Neutral and Ground.
5. Connect ground, then connect L1, L2 to 208-230VAC.
6. Connect a current carrying neutral to N.

DO NOT CONNECT POWER TO L3.

7. Main Power connections are complete.

Connecting Incoming Power to the Main Terminal Block for 1PH and 3PH Machines with Boosters- UH130B, UH230B

WARNING:
Electrocution or serious injury may result when working on an energized circuit.

Disconnect power at the main breaker or service disconnect switch before working on the circuit.

Lock-out and tag the breaker or service disconnect switch to indicate that work is being performed on the circuit.

! VERY IMPORTANT !
PROVIDE A 3 FEET/1 METER SERVICE LOOP IN THE POWER SUPPLY CABLE TO SERVICE THE DISHWASHER.

! SINGLE PHASE POWER REQUIREMENT !

SINGLE PHASE UH130B and UH230B
The electrical power must be a 3-wire plus ground supply which includes a current carrying neutral.

! THREE PHASE POWER REQUIREMENT !

THREE PHASE UH130B and UH230B
The electrical power must be a 4-wire plus ground supply which includes a current carrying neutral.

Connecting Incoming Power to the Main Terminal Block for 1PH and 3PH Machines with Boosters- UH130B, UH230B

Refer to the photo below:

1. Remove the lower front dishwasher panel.
2. Remove the retaining fasteners (A) from the swing-out brackets and swing the chemical pump bracket (B) and the chemical circuit board bracket (C) out of the way as shown.

(continued on next page)

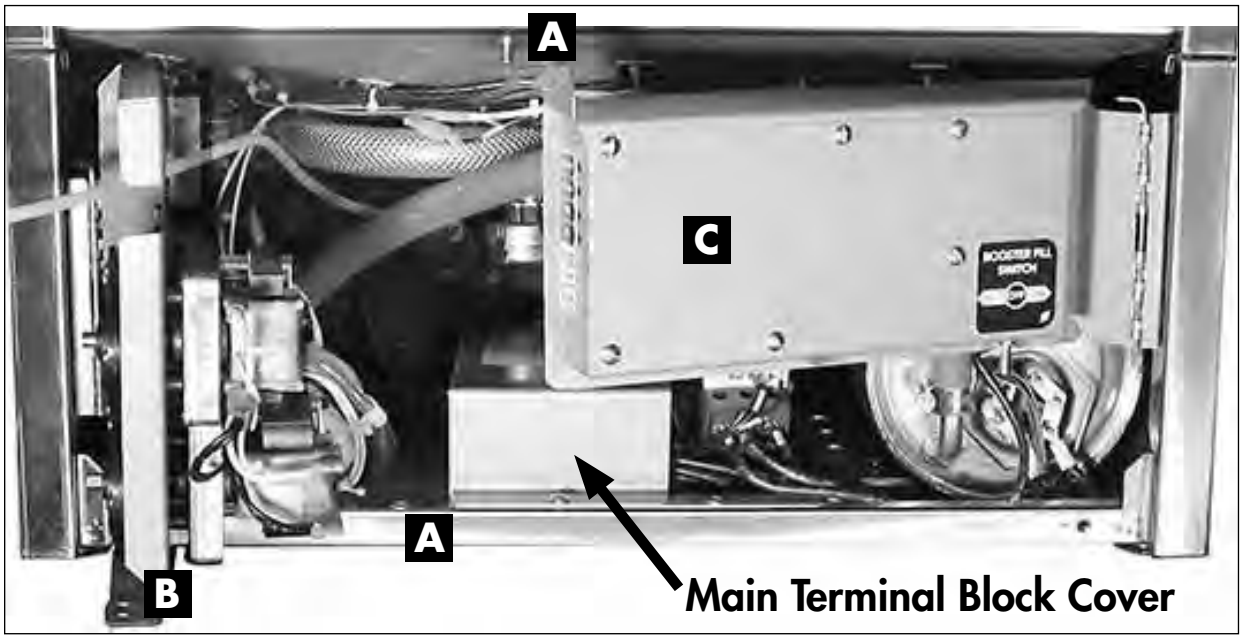

Connecting Incoming Power to the Main Terminal Block for 1PH and 3PH Machines with Boosters

(continued from previous page)

Refer to the photo below:

3. Provide a 3 foot/1 meter service loop in the power supply cable to service the machine
4. Route the power cable from the rear of the machine to the terminal block making sure the cable does not touch the booster tank.
5. Connect the power cable to the terminal block bracket using a suitable strain relief connector.
6. Connect the power wires according to the wiring diagrams on page 3 for either single phase or three phase operation.
7. Swing the chemical pump bracket and the chemical board back into position and secure with the existing fasteners.

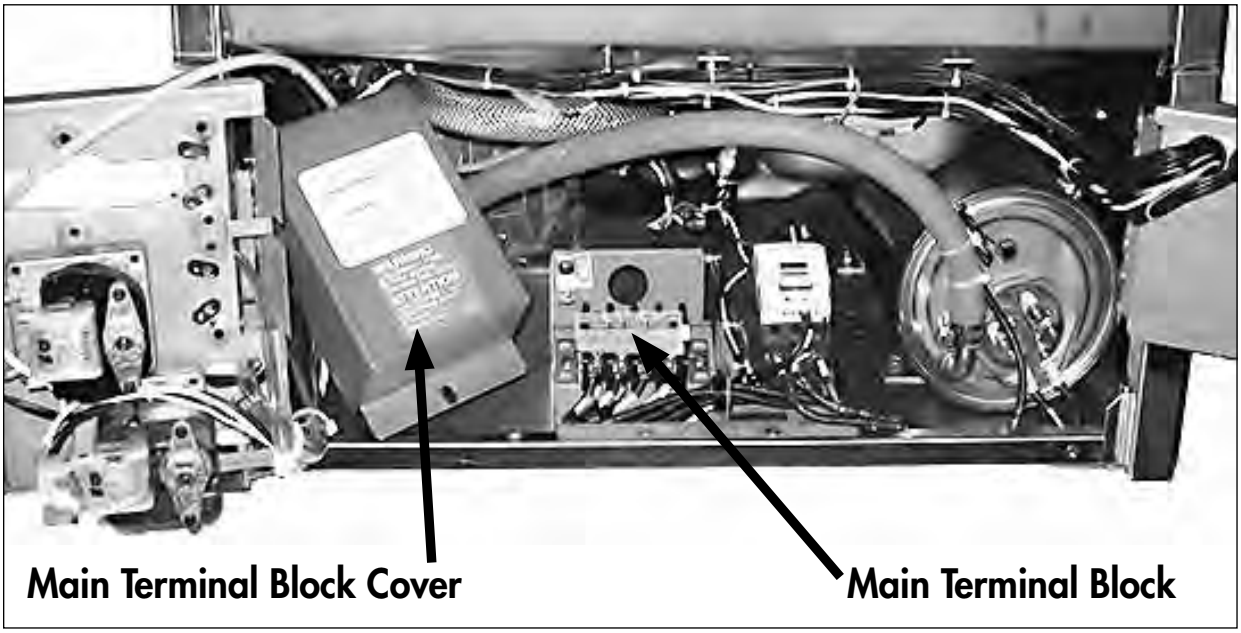

Booster Heater Conversion from 1PH to 3 PH Operation

! VERY IMPORTANT !
THE BOOSTER HEATER IS WIRED FOR 1PH OPERATION WHEN SHIPPED. FOLLOW THE INSTRUCTIONS BELOW TO WIRE THE BOOSTER FOR 3PH.

WARNING:
Electrocution or serious injury may result when working on an energized circuit.

Disconnect power at the main breaker or service disconnect switch before working on the circuit.

Lock-out and tag the breaker or service disconnect switch to indicate that work is being performed on the circuit.

1. To convert the booster heater from single phase to three phase operation, locate the booster wire labeled 1H3 that is cable-tied to the booster hose.
2. Remove the shrink insulation from the terminal and connect to the booster heater element as shown in the wiring diagram on page 8.

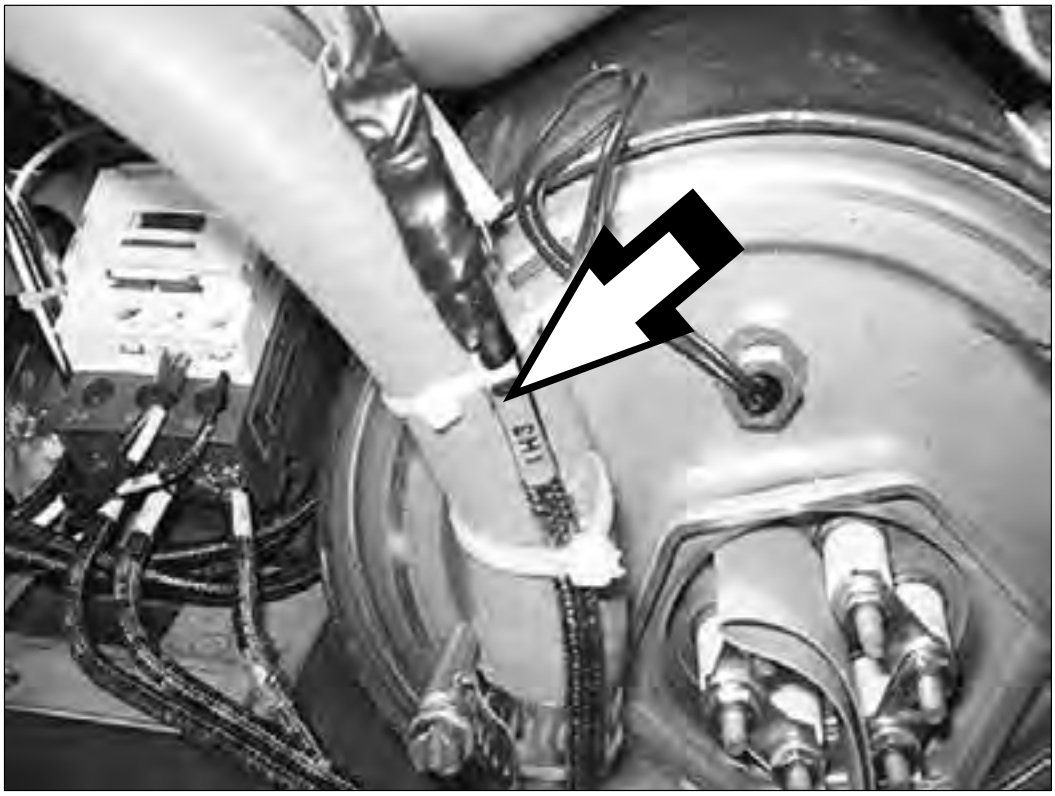

The three phase booster wire (1H3) is cable-tied to the hose adjacent to the booster tank.

Booster Heater Conversion from 1PH to 3 PH Operation (continued)

! VERY IMPORTANT !
THE BOOSTER HEATER IS WIRED FOR 1PH OPERATION WHEN SHIPPED.
FOLLOW THE INSTRUCTIONS BELOW TO WIRE THE BOOSTER FOR 3PH.

3. Disconnect the existing booster heater wires and change the booster heater element jumpers as shown in the illustration below
4. Connect wires 1H1, 1H2, and 1H3 as shown below.

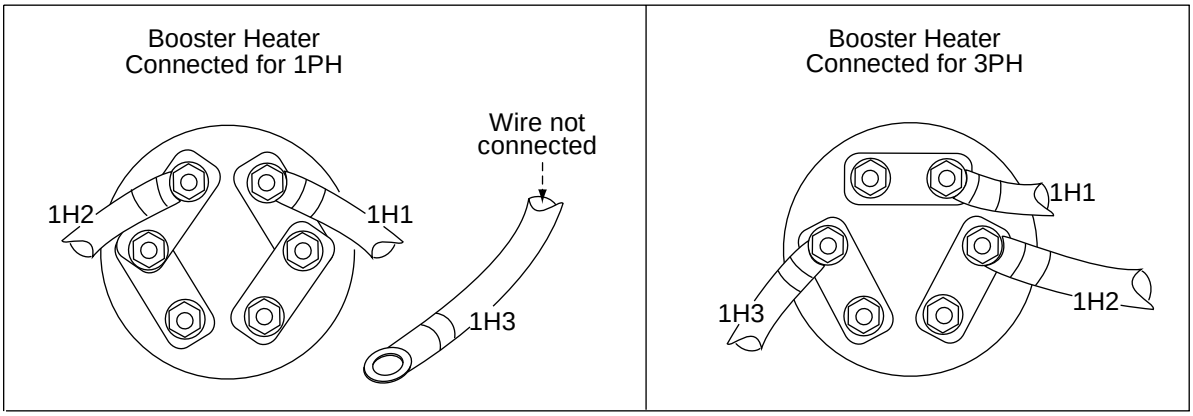

Wiring Diagram - Booster heater element connections shown for 1 phase and 3 phase operation.

5. A replacement 3PH data plate is stowed on the back of the lower front access panel.
6. Replace the existing 1PH data plate on the front of the panel with the new 3PH data plate. Discard the 1PH data plate.
7. Refer to the instructions on page 3 to connect the main incoming power to the machine.

Completing the 1PH to 3PH Electrical Conversion

! ATTENTION !

CHANGE THE DATA PLATE ON THE LOWER FRONT PANEL OF THE MACHINE

AFTER THE MACHINE IS WIRED FOR 3PH AND THE BOOSTER HEATER IS CONNECTED FOR 3PH.

1. The data plate on the dishwasher lower front panel must be changed after the machine is converted from single phase operation to three phase operation.

2. Locate the replacement data plate stowed on the back of the lower front panel.

3. Remove the paper backing from the label and carefully place it over the existing data plate label making sure it covers the label completely.

4 Re-install the lower front panel to complete the conversion.

A three phase data plate is located on the back of the lower front panel.

Water Connections - UH130, UH130B, UH230, UH230B

! VERY IMPORTANT !
Make sure the flexible water supply and drain hoses are not kinked.
Plumbing connections must allow the machine to be pulled out for service and cleaning.

Plumbing connections must comply with national, provincial local plumbing and sanitary codes. Only qualified service personnel familiar with food service equipment should install the machine.

The installing plumber must thoroughly flush the water supply line to remove all debris BEFORE connecting the water supply line to the machine.

1. All models have a 6 ft. flexible hot water fill hose with a 3/4" female garden hose connector.

2. A 1/2" or larger main incoming supply line must be installed to the dishwasher.

3. A 1/2" or larger shut-off valve should be installed in the main water supply, as close to the dishwasher as possible for servicing.

   FOR UH130: The UH130 has a built-in flow control. The flowing incoming hot water supply pressure must be between 25-95 psi. The hot water supply must provide a minimum of 180°F/82°C, measured at the dishwasher.

   FOR UH130B: The UH130B has a built-in flow control. The flowing incoming hot water supply pressure must be between 25-95 psi. The hot water supply must provide a minimum of 140°F/60°C, measured at the dishwasher for 40°F/22°C rise booster or 110°F/43°C for 70°F/39°C rise booster.

4. FOR UH230: The hot water supply must provide a minimum of 180°F/82°C, measured at the dishwasher. **A pressure regulating valve, PRV, (supplied), must be installed after the shut-off service valve if the incoming flow pressure exceeds 20-22 psi.**

   FOR UH230B: The hot water supply must provide a minimum of 140°F/60°C, measured at the dishwasher for 40°F/22°C rise booster or 110°F/43°C for 70°F/39°C rise booster.
   A pressure regulating valve, PRV, (supplied), must be installed after the shut-off service valve if the incoming flow pressure exceeds 20-22 psi.

5. A water hardness of 3 grains/gal (US) [5.3 mg/L] or less is recommended. Excessively hard water will negatively impact wash results.

Drain Connections - UH130, UH130B, UH230, UH230B

! VERY IMPORTANT !
Do not connect the drain hose to a disposer. The dishwasher will not drain correctly.

Refer to the photo below.

1. All models are equipped with a 6 ft.. 5/8" I.D. drain hose. The maximum drain height connection must not exceed 3 ft.[1 m] and must be vented to prevent the wash tank from siphoning.
2. The drain hose is located at the rear of the dishwasher, and is secured to the rear of the machine by two clamps to maintain an anti-siphoning loop in the drain hose.
3. A 3/4" hose barb fitting is strapped to the drain hose prior to shipment. The service part number for the hose barb is P/N 0512321.
4. Additional plumbing parts must be supplied by the plumbing installer.
5. The maximum drain flow is 15 US gpm/12.4 imp gpm/60 lpm.

! ATTENTION !
FAILURE TO FOLLOW THE DRAIN CONNECTION INSTRUCTIONS MAY VOID THE WARRANTY.

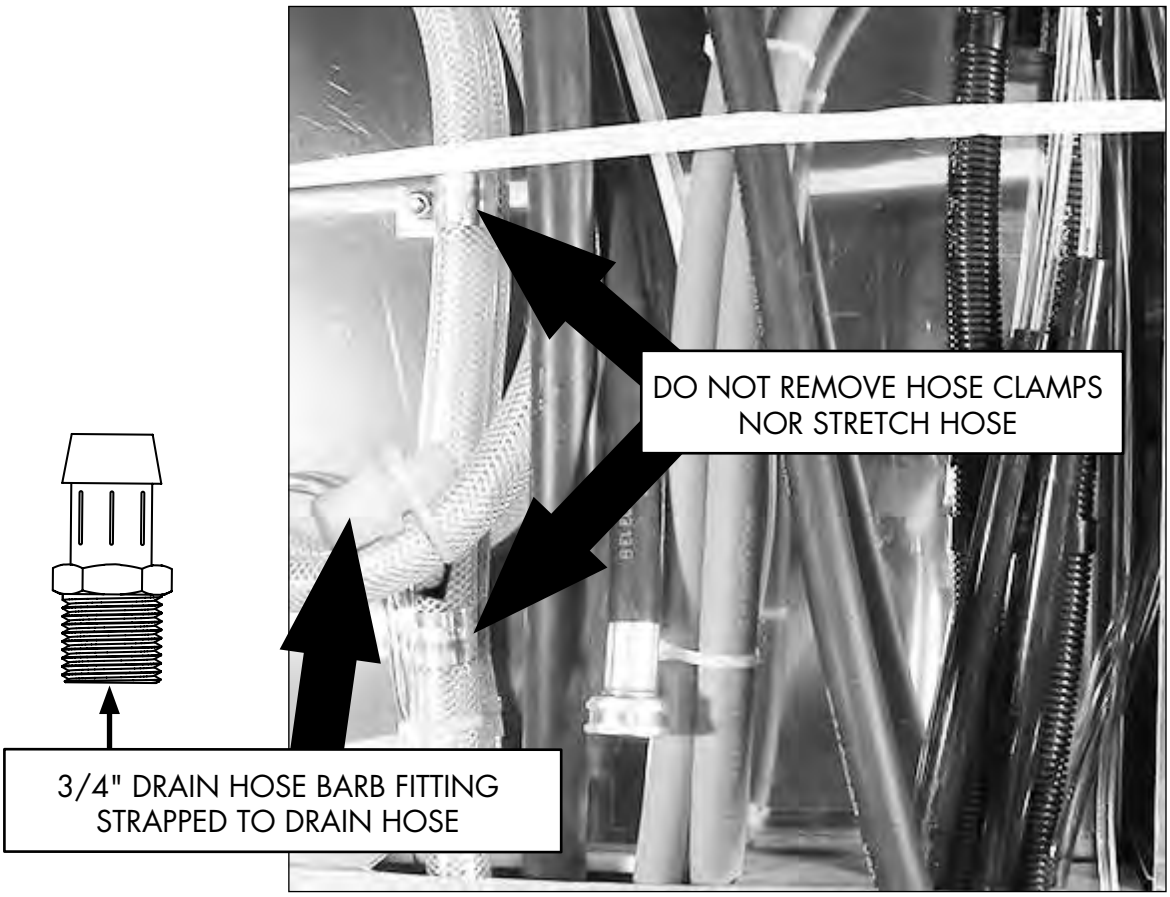

Drain Connection - UH130, UH130B, UH230, UH230B *(continued)*

NOTE
Plumbing connections must comply with national, provincial local plumbing and sanitary codes.

DO NOT REMOVE THE CLAMPS HOLDING THE DRAIN HOSE TO THE BACK OF THE DISHWASHER.

DO NOT CONNECT THE DRAIN HOSE TO A DISPOSER.

DO NOT REDUCE THE SIZE OF THE DRAIN HOSE CONNECTION NOR USE A DOMESTIC DRAIN FITTING.

DO NOT ADD ADDITIONAL LENGTH TO THE DRAIN HOSE.

DO NOT ALLOW THE DRAIN HOSE TO KINK.

For a Direct Drain Connection:

1. Install the drain hose to an 1-1/2" or larger vented "WYE" drain fitting.

2. CONNECTION TO A "TEE" FITTING WILL PREVENT THE DISHWASHER FROM DRAINING COMPLETELY.

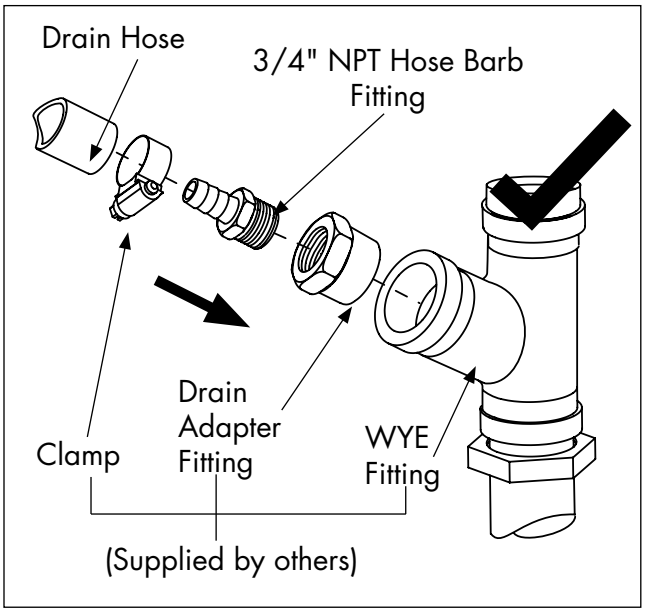

DO
connect the dishwasher flexible drain hose to a vented WYE drain fitting.

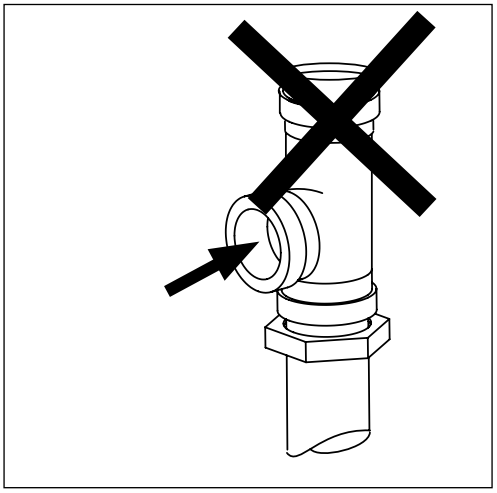

DO NOT
connect the dishwasher flexible drain hose to a TEE drain fitting.

Drain Connection
UH130, UH130B, UH230, UH230B

For an Indirect Drain Connection:

1. A 1" [25.4mm] minimum air gap must be provided between the outlet of the dishwasher drain hose and the flood-level rim of the floor drain, floor sink or any other locally approved drain receptacle. (See illustration below.)

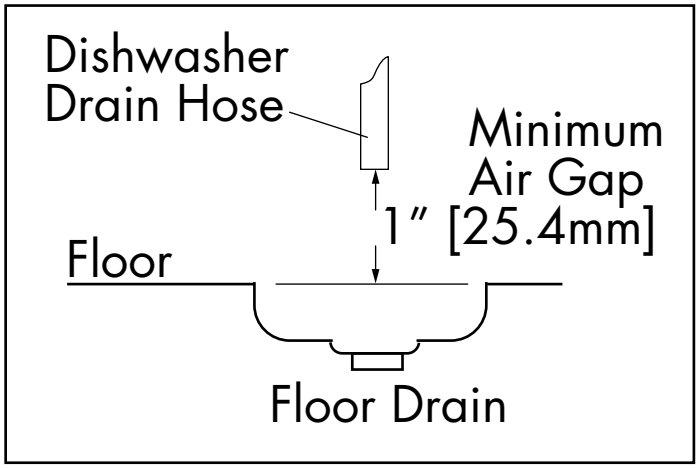

! VERY IMPORTANT !
IMPROPER INSTALLATION OF MACHINE DRAIN HOSE.
Machine drain problems are often the result of improper installation and may not be covered by the limited warranty.

Booster Fill Switch - (Filling the booster tank for the first time) UH130B and UH230B only

! CAUTION !
AVOID PERMANENT DAMAGE TO THE BOOSTER HEATER

DO NOT TURN THE DISHWASHER POWER SWITCH ON WHEN FILLING THE BOOSTER FOR THE FIRST TIME.

THE BUILT-IN BOOSTER TANK WAS DRAINED BEFORE SHIPMENT AND MUST BE REFILLED BEFORE OPERATING THE DISHWASHER.

THE BOOSTER FILL SWITCH IS LOCATED BEHIND THE LOWER FRONT PANEL ON THE RIGHT SIDE OF THE MACHINE.

To refill the booster for the first time:

1. Turn the main breaker or disconnect switch to the dishwasher ON.
2. **DO NOT PUSH THE DISHWASHER ON-OFF/DRAIN POWER SWITCH TO THE ON POSITION**.
3. Locate the booster fill switch and note the switch is in the OFF position.

(continued on next page)

Booster Fill Switch - (Filling the booster tank for the first time) UH130B and UH230B only

4. PUSH AND HOLD the booster fill switch in the FILL position until water starts filling inside the wash compartment.
5. Release the FILL switch.

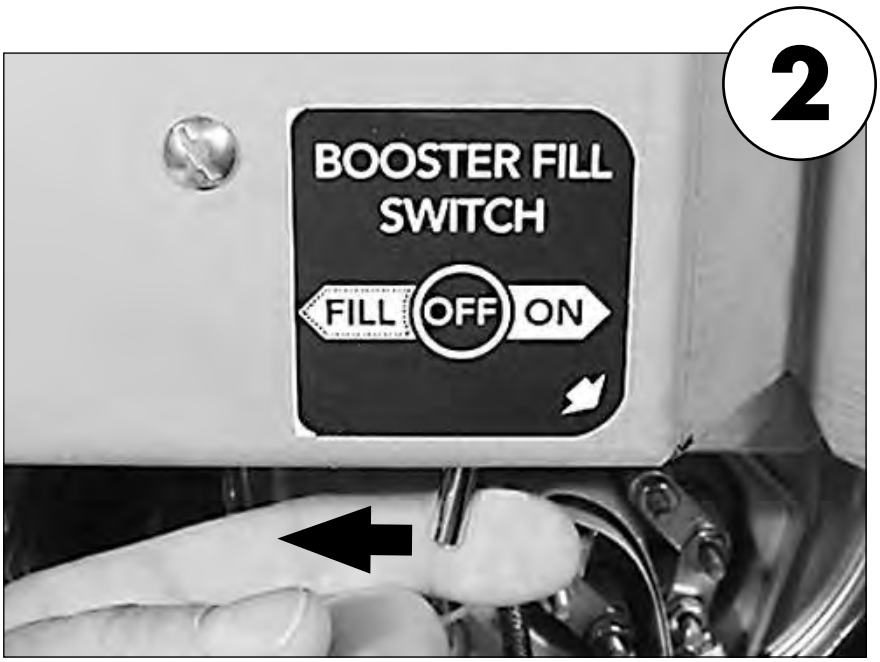

6. PUSH the booster fill switch to the ON position and release.
7. The booster fill operation is complete.
8. Replace the lower front panel on the machine.

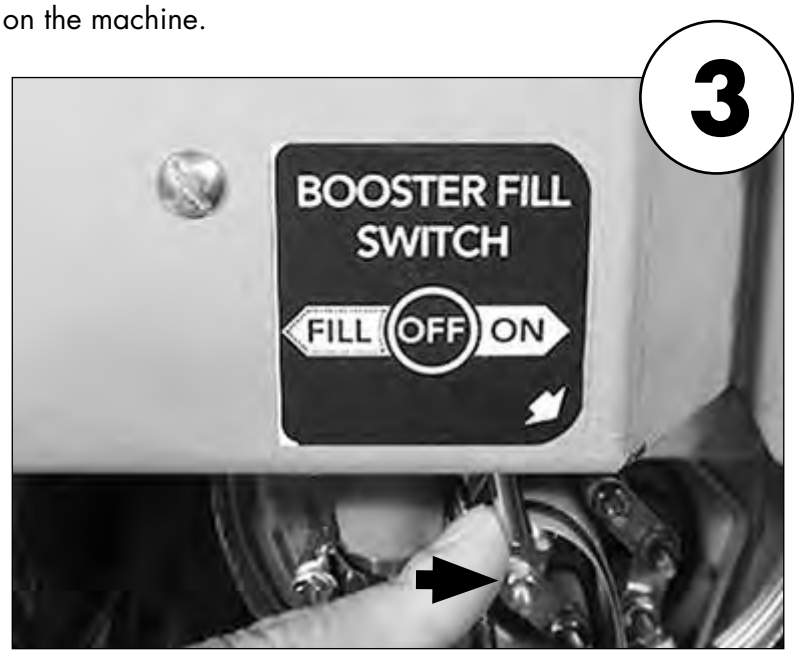

Chemical Connections
UH130, UH130B, UH230, UH230B

! VERY IMPORTANT !
ALWAYS USE A COMMERCIAL-GRADE NON-CHLORINATED DETERGENT.
PLACE THE CHEMICAL SUPPLY CONTAINERS AS CLOSE TO THE MACHINE AS POSSIBLE.
DO NOT ELEVATE THE CHEMICAL CONTAINERS ABOVE THE FINISHED FLOOR.

! VERY IMPORTANT !
Contact a chemical supplier for detergent and rinse-aid chemicals. The chemical supplier must adjust the chemical dispensing pumps for water hardness and food soil types.

Chemical Dispensing Pumps

1. The detergent and rinse-aid pumps are located on the lower left-side of the machine behind the lower-front access panel.
2. Each pump is equipped with 6 feet [1.8 m] of pick-up tubes consisting of supply tubing, stiffener tubes, and strainers.
3. The pick-up tubes are stowed on the back of the machine for shipping.
4. A red label marked DETERGENT and a blue label marked RINSE-AID identify the chemical lines.

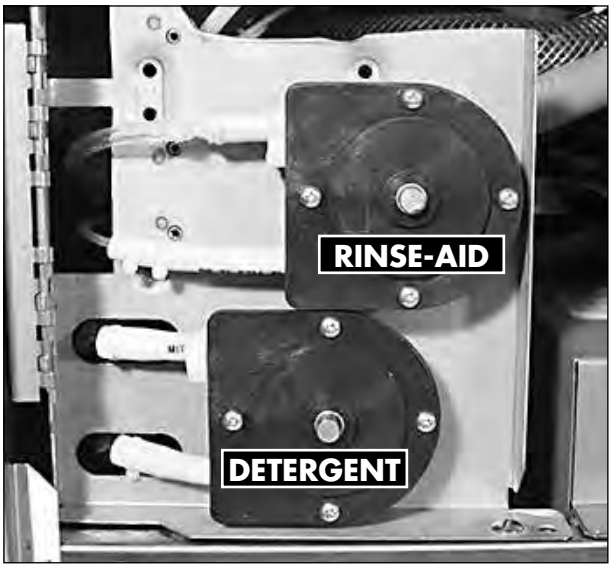

The UH230, 230B pumps are located on the left-side behind the lower front panel of the dishwasher.

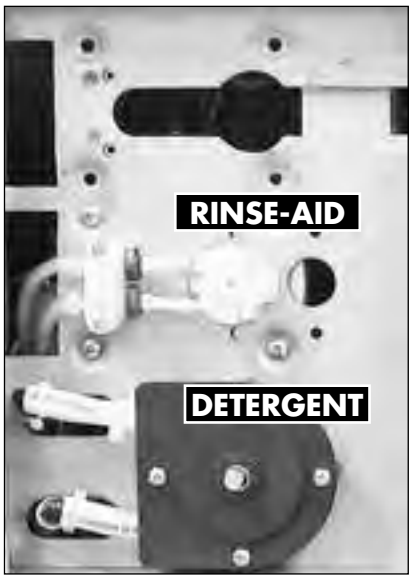

The UH130, 130B pumps are located on the left-side behind the lower front panel of the dishwasher.

Pumps and Injection Points - Detergent and Rinse-aid Dispensing Pumps UH130, UH130B

! VERY IMPORTANT !
ALWAYS USE A COMMERCIAL-GRADE NON-CHLORINATED DETERGENT.
PLACE THE CHEMICAL SUPPLY CONTAINERS AS CLOSE TO THE MACHINE AS POSSIBLE.
DO NOT ELEVATE THE CHEMICAL CONTAINERS ABOVE THE FINISHED FLOOR.

Injection Point Locations

1. For UH130 and UH130B, the detergent and rinse-aid enter the wash tank compartment through a fitting on back right corner of the wash compartment.

(continued on next page)

Pumps and Injection Points - Detergent and Rinse-aid Dispensing Pumps UH230, UH230B

2. For UH230 and UH230B, the detergent enters the wash tank compartment through a fitting on the back right corner of the wash compartment. Rinse-aid enters the final rinse piping through a fitting near the vacuum breaker.

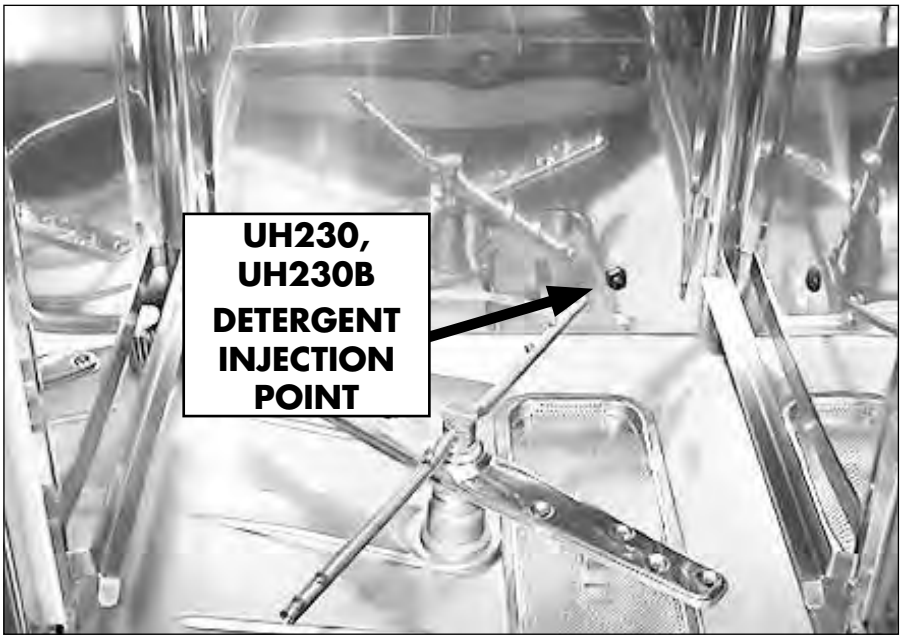

Pumps and Injection Points - Detergent and Rinse-aid Dispensing Pumps UH130, UH130B and UH230, UH230B

Priming the Dispensing Pumps

! VERY IMPORTANT !

The chemical dispensing pumps must be primed before operating the dishwasher and whenever the chemical container is changed.

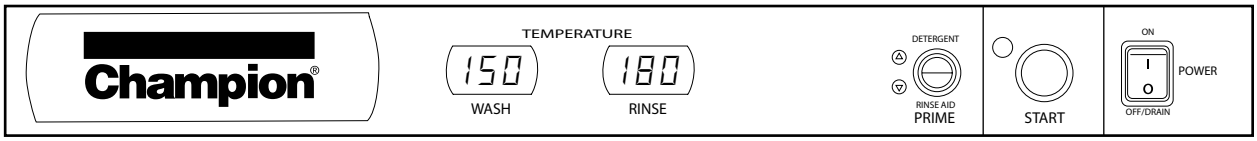

UH130, UH130B Control Panel

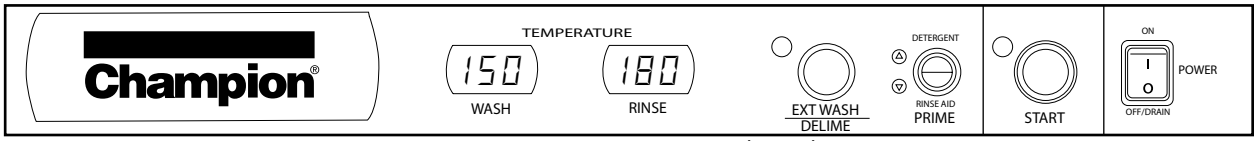

UH230, UH230B Control Panel

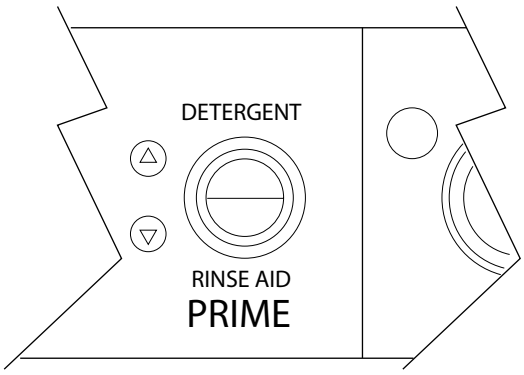

1. The chemical dispensing pump supply lines must be primed before they will pump the chemicals properly.
2. Make sure the chemical containers are full and the correct pick-up tubes are in their containers.
3. Turn the dishwasher power switch ON. The switch will illuminate and the dishwasher will fill with water.
4. Open the dishwasher door, then push and hold the prime push button UP to the DETERGENT position until detergent is observed entering the wash tank compartment through the fitting located on the back right corner of the tank. Release the push button.
5. Push and hold the prime push button DOWN to the Rinse-aid position until you see air bubbles moving through the rinse-aid tubing coming out of the chemical container. Release the push button.
6. Close the door to complete the priming operation.

(continued on next page)

Detergent and Rinse-aid Dispensing Pumps - Pump and Fill Adjustments UH130, UH130B and UH230, UH230B

! ATTENTION !

The amount of dispensed chemical is determined by the run time of the dispensing pump.

Refer to the photo below:

1. The chemical dispensing pump run and the tank fill adjustment screws are located on the end of the chemical circuit board swing-out bracket.
2. It is not necessary to swing the bracket out to make adjustments, but if desired, remove the mounting nut (A) and swing the bracket (B) out and to the right.
3. Refer to the next page for adjustment instructions.

! VERY IMPORTANT !
INSPECT & REPLACE THE CHEMICAL DISPENSING PUMP SQUEEZE TUBES EVERY SIX MONTHS.

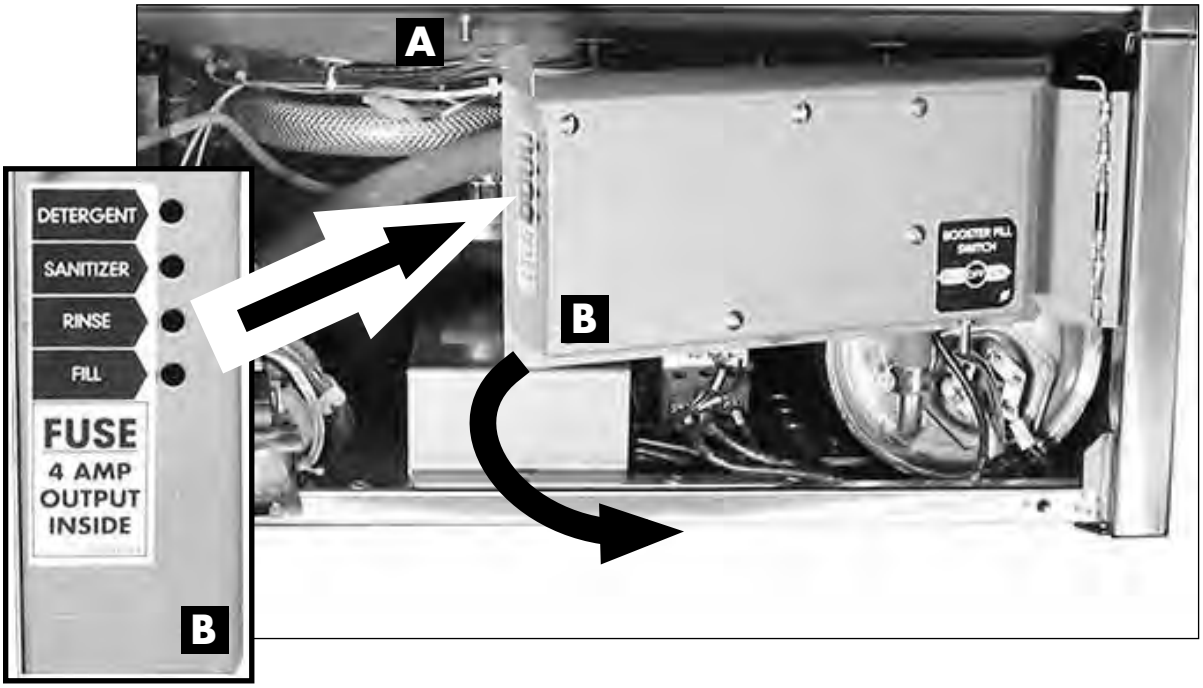

! VERY IMPORTANT !
Contact a chemical supplier for detergent and rinse-aid chemicals. The chemical supplier must adjust the chemical dispensing pumps for water hardness and food soil types.

Detergent and Rinse-aid Dispensing Pumps - Pump and Fill Adjustments UH130, UH130B and UH230, UH230B

Refer to the photo below:

To adjust the amount of chemicals dispensed by the pumps:

1. Make sure the chemical containers are full and the pick-up tubes are in their proper containers.
3. Turn the dishwasher power switch ON. The switch will illuminate and the dishwasher will fill with water.
4. Run a normal dishwasher cycle and test detergent and rinse-aid concentrations according to the chemical supplier's instructions.

CAUTION:
Excessive pressure to the potentiometers when adjusting can result in bent or broken adjusting screws.

5. Each dispensing pump has a clearly marked adjustment screw. Turn the screw CW to increase the run time of the dispensing pump and CCW to reduce the run time.

Fill Adjustment For UH130, UH130B Only

UH130, UH130B only
To adjust the tank fill:

1. The fill adjustment screw will provide a small change in the tank water level.
2. If a large adjustment is needed, check the incoming water pressure and make sure the fill hose is not kinked.
3. If the above items are okay then the size of the incoming water supply should be checked. The incoming water supply line must be a minimum of 1/2" or larger.

Operation - UH130, UH130B and UH230, UH230B

Loading Dish Racks

! VERY IMPORTANT !
DO NOT OVERLOAD THE DISH RACK.
LOAD ONE DISH RACK INTO THE MACHINE AT A TIME.

1. Prescrap and rinse the wares before loading to remove large food particles.
2. Load soiled wares into the dish rack. Place plates and glasses in a peg rack. Place cups and bowls in a flat bottom rack. Place utensils in a single layer in a flat-bottom rack. Place pots and pans in a flat-bottom rack.

   Do not overload the dish rack. Wash one dish rack at a time.

3. Slide one dish rack into the wash compartment making sure that wares do not interfere with the rotating spray arms. Do not wash more than one dish rack at a time.

Prescrap and rinse wares before loading into the machine.

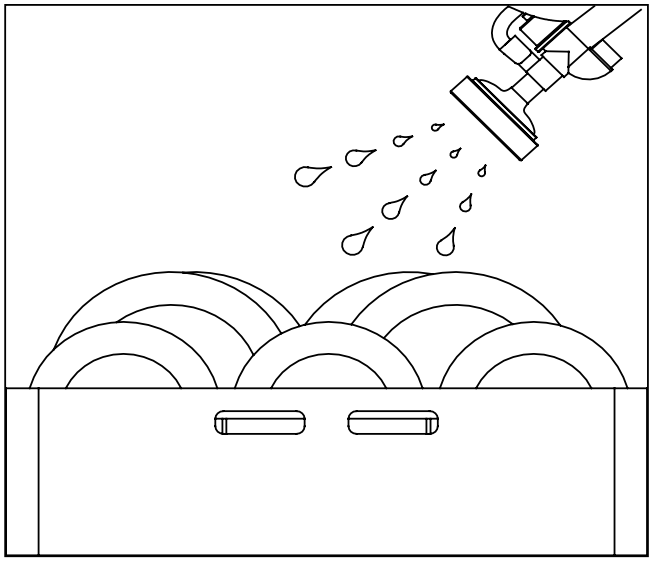

Load plates and glasses in a peg rack.

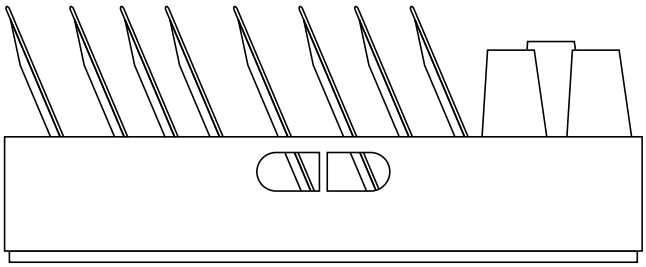

Loading Dish Racks *(continued)*

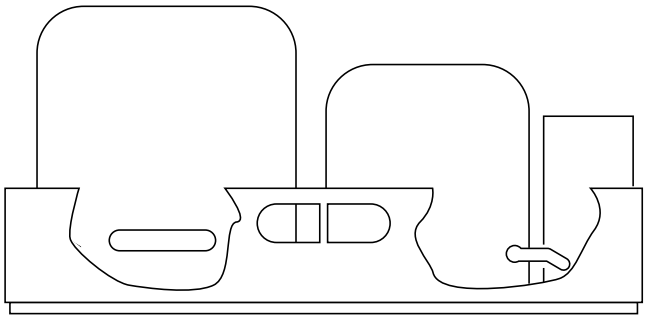

Load pots and pans in a flat-bottom rack.

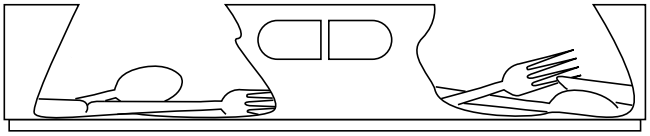

Load utensils in a single layer in a flat-bottom rack.

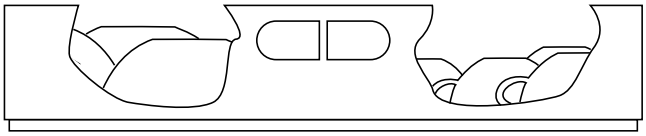

Load cups and bowls in a flat-bottom rack.

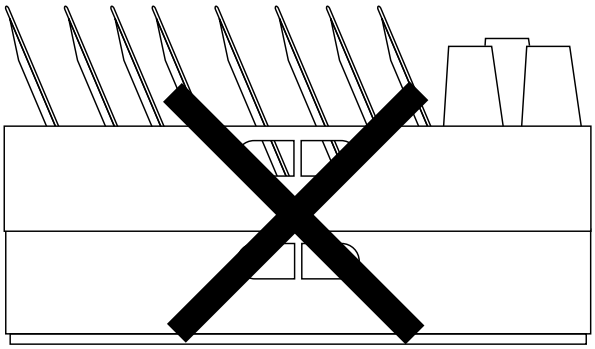

<u>NEVER</u> stack dish racks.
Wash one dish rack at a time.

Operation - UH130, UH130B Only

Normal Wash Mode

UH130B Control Panel

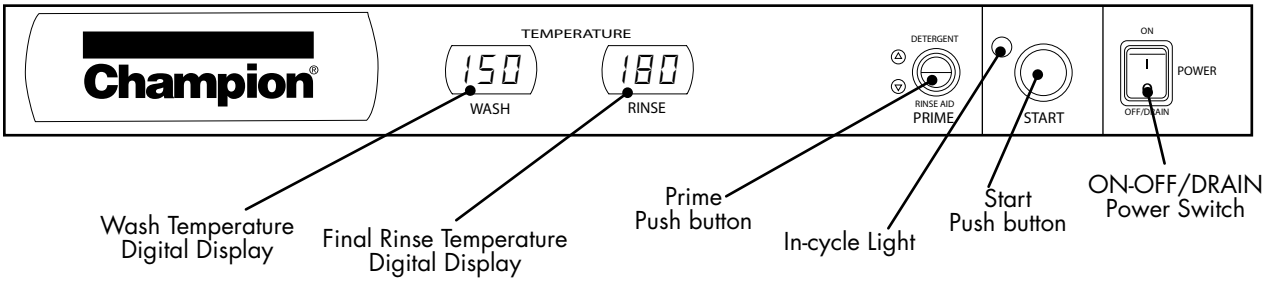

1. Close the dishwasher front door.
2. Push the dishwasher Power Switch UP to turn the power ON.
3. The power switch will illuminate and the machine will fill with water.
4. Wait until the wash temperature gauge indicates a minimum of 150°F/66°C.

PLACE AN EMPTY DISHRACK IN THE MACHINE AND RUN THE FIRST CYCLE EMPTY TO HEAT THE WASH TANK INTERIOR.

5. Load the dish rack into the machine. Wash one dish rack at a time.
6. Close the door, then press the START BUTTON for 1 second. The green in-cycle light will illuminate and the wash cycle will begin. The total cycle is approximately 141 seconds.
7. Opening the door during a cycle will stop the dishwasher. If the door is open more than 5 seconds the cycle will restart from the beginning, if open less than 5 seconds the cycle will resume where it left off when the dishwasher door is closed.
8. The final rinse cycle begins at the end of the wash cycle. The machine drains and then refills with fresh water hot water. Check the rinse temperature gauge during the final rinse. It must indicate a minimum of 180-195°F/82-91°C. The final rinse water is retained for the next wash cycle.
9. When the green cycle light goes out, open the door and remove the rack of clean wares.

! ATTENTION !
DOOR LEFT OPEN DURING WASH CYCLE
If the dishwasher door is left open for more than 5 seconds during the normal wash mode, then the dishwasher cycle will reset to the beginning of the normal wash cycle.

! ATTENTION !
RINSE SENTRY MODE WILL EXTEND WASH CYCLE TIME
In the event that the final rinse temperature has not reached 180-195°F/82-91°C after the wash cycle, the rinse sentry will extend the wash cycle time until the booster reaches 180-195°F/82-91°C. If the proper temperature is not reached within 5 minutes, the machine will leave the rinse sentry mode and complete the cycle.

UH230 and UH230B Only - Operation

Normal Wash Mode

UH230B Control Panel

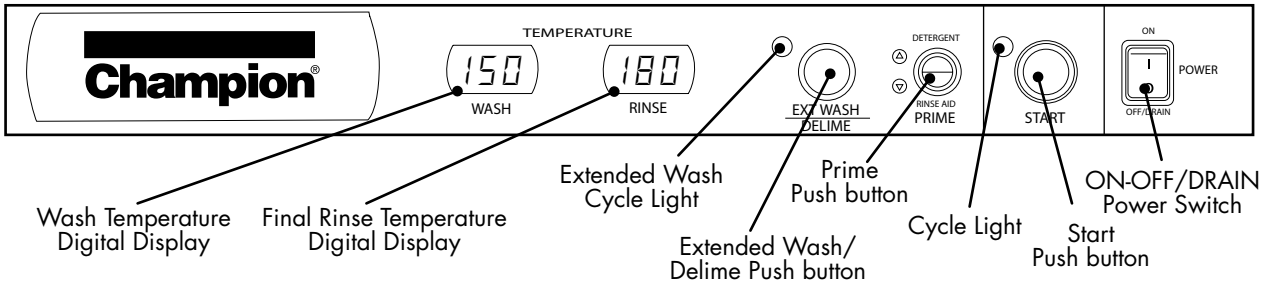

1. Close the door.
2. Push the dishwasher Power Switch UP to turn the power ON.
3. The power switch will illuminate and the machine will fill with water.
4. Check the pressure gauge as the machine fills and make sure the incoming water pressure is between 20-22 PSI.
5. Wait until the wash temperature gauge indicates a minimum of 150°F/66°C.

PLACE AN EMPTY DISHRACK IN THE MACHINE AND RUN THE FIRST CYCLE EMPTY TO HEAT THE WASH TANK INTERIOR.

6. Load the dish rack into the machine. Wash one dish rack at a time.
7. Close the door, then press the START BUTTON for 1 second. The green in-cycle light will illuminate and the wash cycle will begin. The total cycle is approximately 90 seconds.
8. Opening the door during a cycle will stop the dishwasher. If the door is open more than 5 seconds the cycle will restart from the beginning, if open less than 5 seconds the cycle will resume where it left off when the dishwasher door is closed.
9. The final rinse cycle begins at the end of the wash cycle. The machine drains and retains a portion of the final rinse water for the next wash cycle.
10. Check the rinse temperature gauge during the final rinse. It must indicate a minimum of 180-195°F/82-91°C. The final rinse water is retained for the next wash cycle.
11. Check the pressure gauge during the final rinse to ensure the gauge reads 20-22 PSI.
12. When the green cycle light goes out, open the door and remove the rack of clean wares.

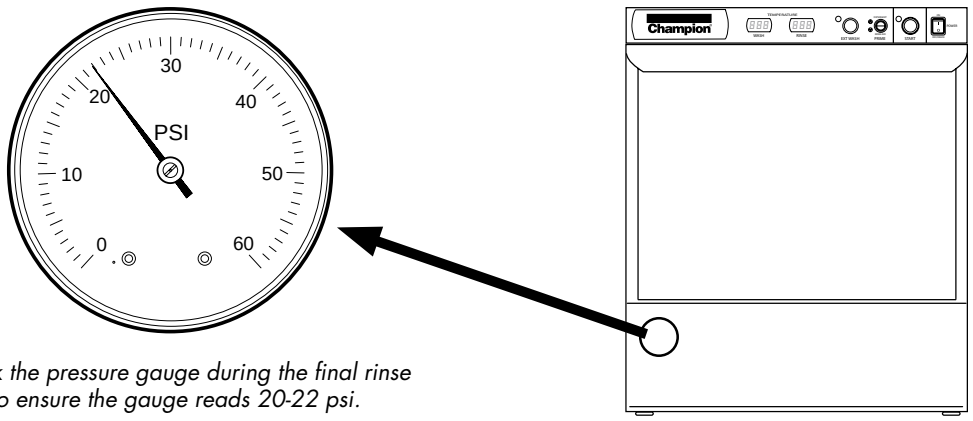

Check the pressure gauge during the final rinse to ensure the gauge reads 20-22 psi.

UH130B and UH230B Rinse Sentry Mode

! ATTENTION !
DOOR LEFT OPEN DURING WASH CYCLE
If the dishwasher door is left open for more than 5 seconds during the normal wash mode, then the dishwasher cycle will reset to the beginning of the normal wash cycle.

! ATTENTION !
RINSE SENTRY MODE WILL EXTEND WASH CYCLE TIME
In the event that the final rinse temperature has not reached 180-195°F/82-91°C after the wash cycle, the rinse sentry will extend the wash cycle time until the booster reaches 180-195°F/82-91°C. If the proper temperature is not reached within 5 minutes, the machine will leave the rinse sentry mode and complete the cycle.

Extended Wash Mode
Model UH230, UH230B Only

The Extended Wash Mode is used to wash heavily soiled items such as pots, pans and other wares that require more washing time than the standard 90 second Normal Wash Mode. The dishwasher will remain in the Extended Wash Mode until the operator exits the mode or a maximum of 15 minutes, whichever occurs first.

1. Load a dish rack into the dishwasher, close the door and press the START button.
2. The green in-cycle light will illuminate and the dishwasher will begin a normal wash cycle.
3. Wait 10 seconds for the detergent to enter the wash compartment before pressing the EXT WASH button.

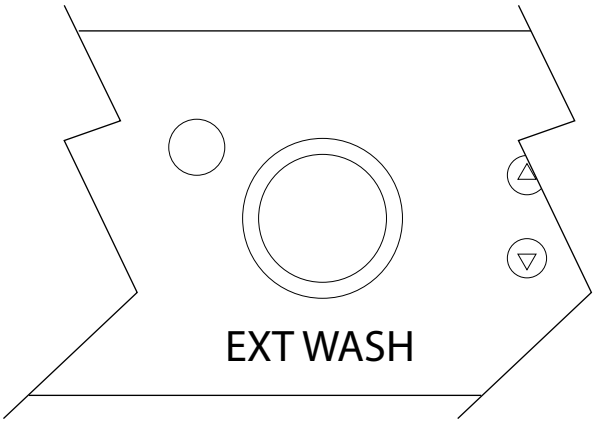

Press the EXT WASH button to place the machine into the extended wash mode to clean heavily soiled wares.

4. Press the EXT WASH button to place the dishwasher in the Extended Wash Mode.
5. The green extended wash light will illuminate indicating that the machine is in the Extended Wash Mode.
6. The dishwasher will continue to wash for a maximum of 15 minutes unless the operator presses the EXT WASH button again.
7. Press the EXT WASH button. The green extended wash light will go out indicating that the dishwasher has returned to the Normal Wash Mode.
8. The dishwasher will finish the wash cycle and perform a final rinse of the wares.

UH130, UH130B and UH230, UH230B

Drain Mode

The dishwasher will enter the drain mode whenever the Power Switch is pushed down to the OFF/DRAIN position.

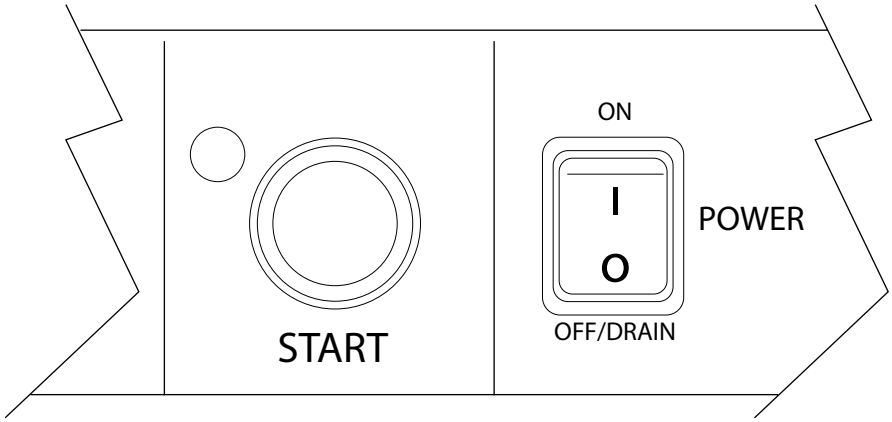

1. Push the illuminated power switch down to the OFF/DRAIN position. The power switch light will go out.
2. The cycle light will illuminate and the machine will drain.
3. The machine, will flush, perform 3 short drain cycles and then drain completely.
4. The cycle light will go out indicating that the drain cycle is complete. Do not open the door until the light goes out.

! VERY IMPORTANT !
Draining Problems Related To Improper Installation.
Problems with draining are often the result of improper installation. The drain hose is looped and clamped as shown in the photo below and must not be changed.

The drain hose is looped and clamped and must not be changed. Altering the drain hose routing may result in the machine's inability to drain or may cause the machine to siphon the water out of the machine.

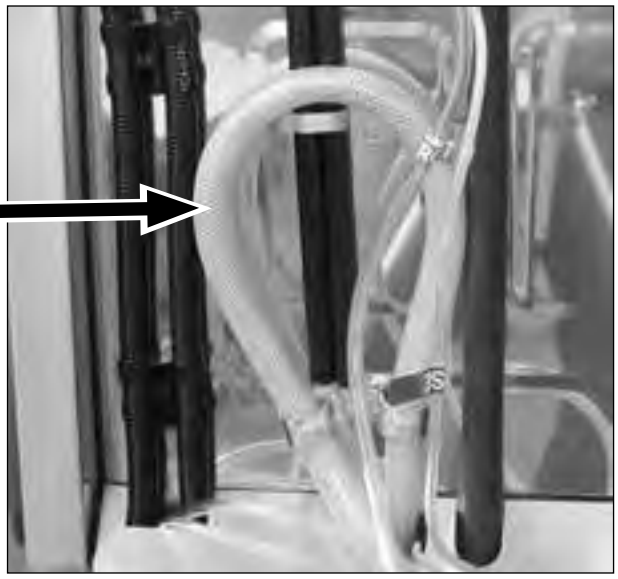

Cleaning - UH130, UH130B and UH230, UH230B

! VERY IMPORTANT !
DRAIN AND CLEAN THE DISHWASHER EVERY 2 HOURS OF CONTINUOUS OPERATION, AFTER EACH MEAL PERIOD, AND AT THE END OF THE DAY.

All Models

Cleaning the wash tank:

1. Remove the upper and lower spray arms and flush clean in a sink.
2. Remove the scrap screen taking care that debris does not fall off the screen and into the wash tank or sump. Flush the screen clean in a sink. Be sure to back-flush the screen.
3. DO NOT strike the scrap screen on solid surfaces.
4. Check the sump for foreign material.
5. Clean the pump intake strainer in the bottom of the sump.
6. DO NOT scrub the interior with metal scrub pads.
7. Check the sump heating element for lime deposits and gently remove with a scouring pad. DO NOT USE METALLIC SCRUB PADS.
8. Wipe the exterior of the dishwasher with a soft clean cloth and a mild detergent.
9. Leave the door open to aid in overnight drying.

! ATTENTION !
DO NOT USE METALLIC SCRUB PADS TO CLEAN THE MACHINE.
DO NOT SPRAY THE EXTERIOR OF THE MACHINE WITH WATER.

UH130, UH130B and UH230, UH230B - Cleaning

UH130, UH130B

1. Unscrew the retaining screw from the upper and lower interchangeable spray arms.
2. Flush the spray arms clean in a sink. Be sure to flush the wash arm bearings.

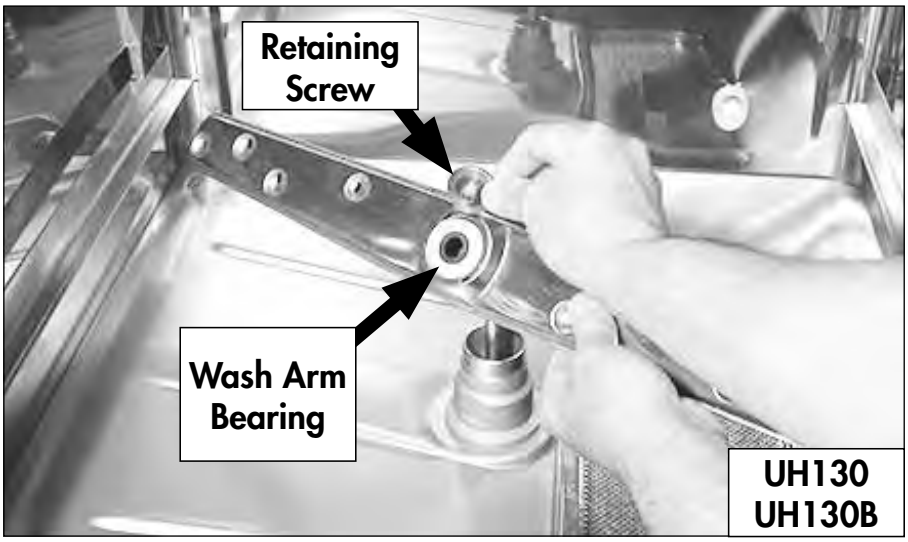

UH230, UH230B

1. Unscrew the retaining screw from the upper and lower rinse arms. The rinse arms are interchangeable.
2. Remove the upper and lower wash arms and flush clean in a sink.
3. Flush the wash arm bearings clean.

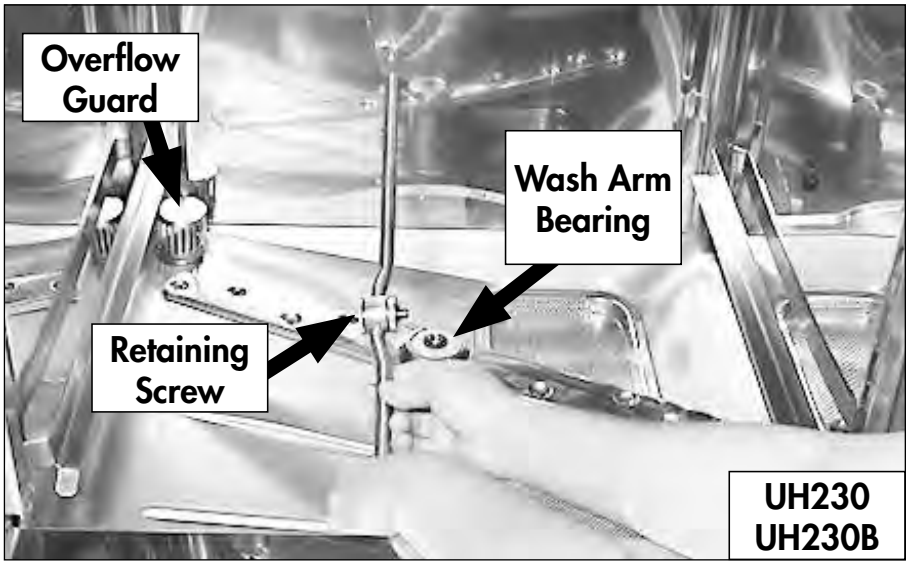

Cleaning - UH230, UH230B Only

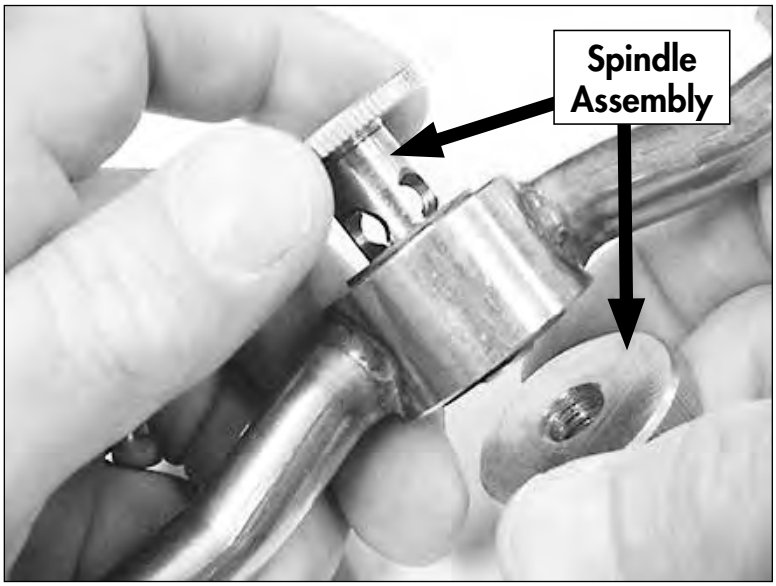

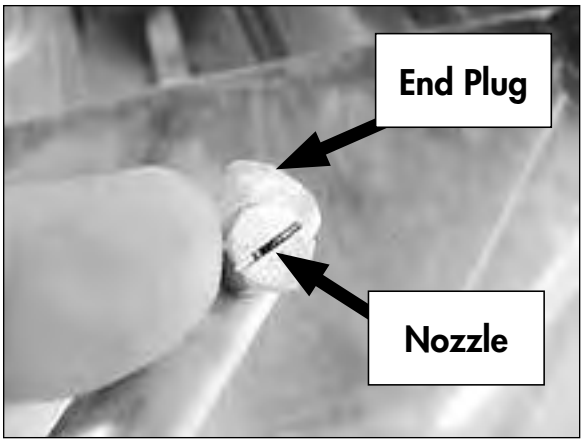

UH230, UH230B Rinse Arms

1. There are two rinse arms in the UH230, and UH230B. They are interchangeable.
2. Remove the spindle assembly and end plugs in each pipe and flush the rinse pipes.
3. Inspect the rinse arm bearings for wear and replace as necessary.
4. Clean the rinse arm nozzles with a small paper clip.
5. Reassemble the rinse arm assemblies.

(continued on next page)

All Models - Cleaning

All Models
Scrap Screen and Sump Strainer

1. Lift the scrap screen straight up and out of the machine to prevent food particles from falling into the tank sump.

2. Flush the scrap screen in a remote sink making sure to back-flush both side of the screen.

3. Wipe the tank sump of water and debris.

4. Carefully inspect the pump intake strainer. This strainer is not removeable but must be thoroughly cleaned before reinstalling the scrap screen.

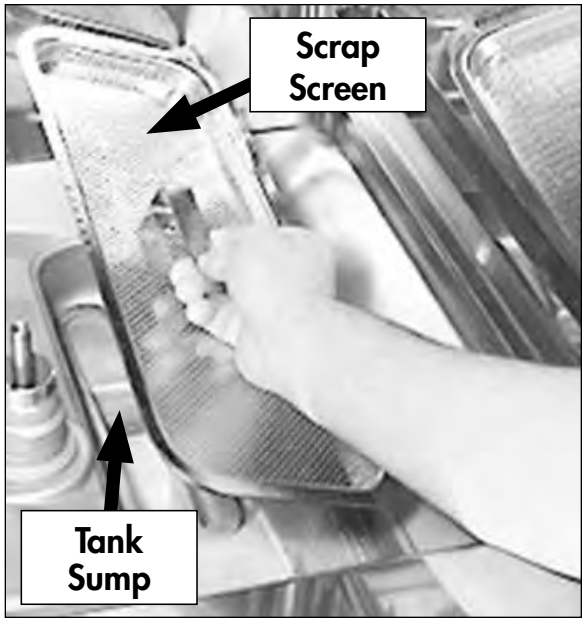

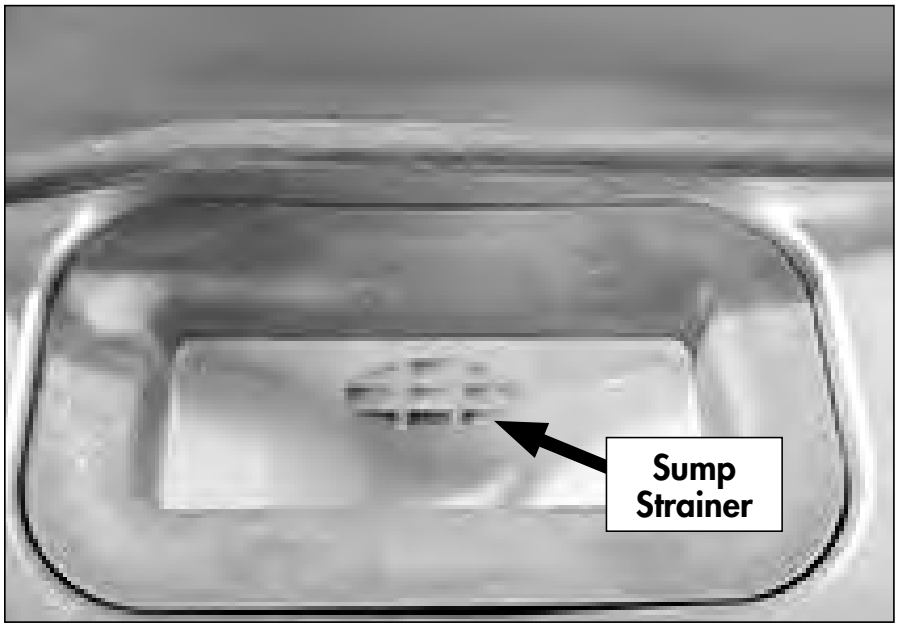

! ATTENTION !

A CLOGGED OR RESTRICTED SUMP STRAINER WILL PREVENT THE PROPER WASHING, RINSING AND DRAINING OF THE MACHINE.

! ATTENTION !

WIPE THE EXTERIOR OF THE MACHINE WITH A SOFT CLOTH AND MILD DETERGENT. DO NOT SPRAY THE EXTERIOR WITH WATER OR BLEACH.

LEAVE THE DOOR OPEN TO AID IN OVERNIGHT DRYING.

Deliming Cautions and Warnings

A deliming agent must be used in accordance with your chemical supplier's instructions.

DANGER:
Death or serious injury may result when deliming solution is mixed with sodium hypochlorite sanitizing agent. Mixing may cause hazardous gases to form. Deliming solution and other acids must never be mixed with chlorine, iodine, bromine, or fluorine.

CAUTION:
Skin contact with deliming solutions can cause severe irritation and possible chemical burns. Always wear eye protection, rubber gloves and protective clothing when handling chemicals.

UH130 and UH130B Deliming Procedure

Follow the procedures below to de-lime the UH130, UH130B dishwasher.

1. Open the dishwasher door and remove any dish rack.
2. Turn the power switch on the dishwasher to the ON position.
3. Remove the detergent and rinse-aid chemical supply tubing from their chemical supply containers.
4. Place the detergent and rinse-aid tubing in a container of hot water.
5. Press and hold the prime switch UP in the DETERGENT position to flush all of the detergent from the supply tubing. Release the switch.
6. Press and hold the prime switch DOWN in the RINSE AID position to flush all of the rinse-aid from the supply tubing. Release the switch.
7. Close the door and run 4 empty cycles to flush any chemicals from the dishwasher tank
8. **Always wear eye protection, rubber gloves and protective clothing when handling chemicals.**
9. Open the door and carefully add the deliming chemical to the wash tank in accordance with the chemical supplier's instructions. Be careful to avoid splashing.
10. Close the door and press the START button to run a dishwasher cycle.
11. Check the deliming results and if scale is still present repeat steps 8-9.
12. Run 4 empty cycles to flush any deliming chemicals from the machine.
13. Return chemical supply tubing to their containers and prime the chemical lines.
14. Return the dishwasher to normal operation.

Read and Follow the Deliming Cautions and Warnings on page 32 before deliming the machine..

UH230 and UH230B Deliming Procedure

Follow the procedures below to de-lime the UH230, UH230B dishwasher.

1. Open the dishwasher door and remove any dish racks.
2. Turn the power switch on the dishwasher to the ON position.
3. Remove the detergent and rinse-aid chemical supply tubing from their chemical supply containers.
4. Place the tubing in a container of hot water.
5. Press and hold the prime switch UP in the DETERGENT position to flush the detergent from the supply tubing. Release the switch.
6. Press and hold the prime switch DOWN in the RINSE AID position to flush the rinse-aid from the supply tubing. Release the switch.
7. Turn the dishwasher power switch to OFF/DRAIN to drain the wash tank. The green cycle light will go out in about 2 minutes.
8. **Always wear eye protection, rubber gloves and protective clothing when handling chemicals.** Open the door and carefully add the deliming chemical to the wash tank in accordance with your chemical supplier's instructions. Be careful to avoid splashing.
9. Close the door and press the EXT WASH/DELIME switch three times. The EXT WASH/DELIME indicator light will illuminate and the machine will run for 23 minutes.
10. Check the deliming results and if scale is still present repeat steps 7-9.
11. Push the power switch ON to refill the machine and return the dishwasher to normal operation.
12. Return chemical supply tubing to their containers and prime the chemical lines.

UH130, UH130B and UH230, UH230B - Maintenance

Follow the maintenance schedules below to keep the dishwasher operating most efficiently.

Daily Maintenance

1. Make sure the water supply is on and that the drain is not clogged.
2. Check the temperature gauges and/or displays to ensure they are operating.
3. Make sure the dish racks are in good condition.
4. Check the chemical containers and refill as required.
5. Follow the cleaning procedures provided in the *Cleaning Section*.

Weekly Maintenance

1. Perform Steps 1-5 in the Daily Maintenance.
2. Inspect water lines for leaks.
3. Check for water leaks underneath the dishwasher.
4. Make sure the flexible water fill and drain hoses are not kinked.
5. Make sure that the dishwasher is level.
6. Clean accumulated lime deposits from the wash tank heating element.
7. Inspect the scrap screen and replace it if damaged.
8. Check the spray arms and replace or repair if damaged.

Monthly Maintenance

1. Perform the Daily and Weekly Maintenance listed above.
2. Clean the chemical dispenser pick-up tubing for the chemical dispensing pumps.

To clean the pick-up tubing:

1. Remove the pick-up tubes from their containers.
2. Place each tube in a separate container of hot water.
3. Press and hold the PRIME buttons UP and DOWN until water flows into the wash tank compartment.
4. Return the pick-up tubes to their containers.
5. Run 3 empty dishwasher cycles to flush any chemicals from the dishwasher wash compartment.
6. Return the pick-up tubes to their containers and prime the chemical lines.

NOTE:
There are no lubrication points on the dishwasher.

Model UL130 Low Temperature Chemical Sanitizing Undercounter Dishwasher

(Single Phase) Electrical Connections - UL130

WARNING:
Electrocution or serious injury may result when working on an energized circuit.

Disconnect power at the main breaker or service disconnect switch before working on the circuit.

Lock-out and tag the breaker or service disconnect switch to indicate that work is being performed on the circuit.

! ATTENTION !
A qualified electrician must connect the main incoming power to the dishwasher in accordance with all local codes and regulations or in the absence of local codes in accordance with the National Electrical Code or the Canadian Electrical Code.

Refer to the connection diagram below for single a phase machine without a built-in booster.

1. A three prong 4 foot power cord and plug is prewired with the machine for connection to a 115VAC power source.

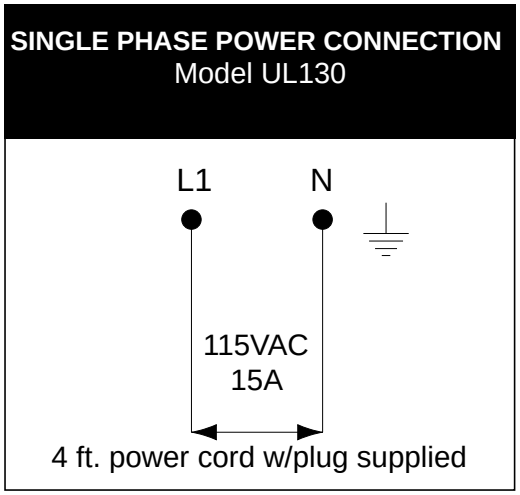

! ATTENTION !
Model UL130 is equipped with a 4 ft. power cord and plug. These models require a 115VAC,15A receptacle.

Water Connection - UL130

! VERY IMPORTANT !
Make sure that the flexible water supply and drain hoses are not kinked.
Plumbing connections must allow the machine to be pulled out for service and cleaning.

Plumbing connections must comply with national, provincial local plumbing and sanitary codes. Only qualified service personnel familiar with food service equipment should install the machine.

The installing plumber must thoroughly flush the water supply line to remove all debris <u>BEFORE</u> connecting the water supply line to the machine.

1. All models have a 6 ft. flexible hot water fill hose with a 3/4" female garden hose connector.
2. A 1/2" or larger main incoming supply line should be installed to the dishwasher.
3. We recommend that a 1/2" or larger shut-off valve be installed in the main water supply, as close to the dishwasher as possible for servicing.
4. The UL130 has a built-in flow control which requires that the incoming hot water supply pressure must be between 25-95 psi.
5. The hot water supply must provide a minimum of 120°F/49°C, measured at the dishwasher; however, 140°F/60°C is recommended.
6. A water hardness of 3 grains/gal (US) [51.3 mg/L] or less is recommended. Hard water can adversely affect wash results.

Drain Connection - UL130

1. All models have a 6 ft.. 5/8" I.D. drain hose. The maximum drain height connection must not exceed 3 ft.[0.9 m].
2. A 3/4" hose barb fitting is strapped to the drain hose to connect the drain hose to a wye drain fitting. The service part number for the hose barb is P/N 0512321.
3. The maximum drain flow is 15 US gpm/12.4 imp gpm/60 lpm.

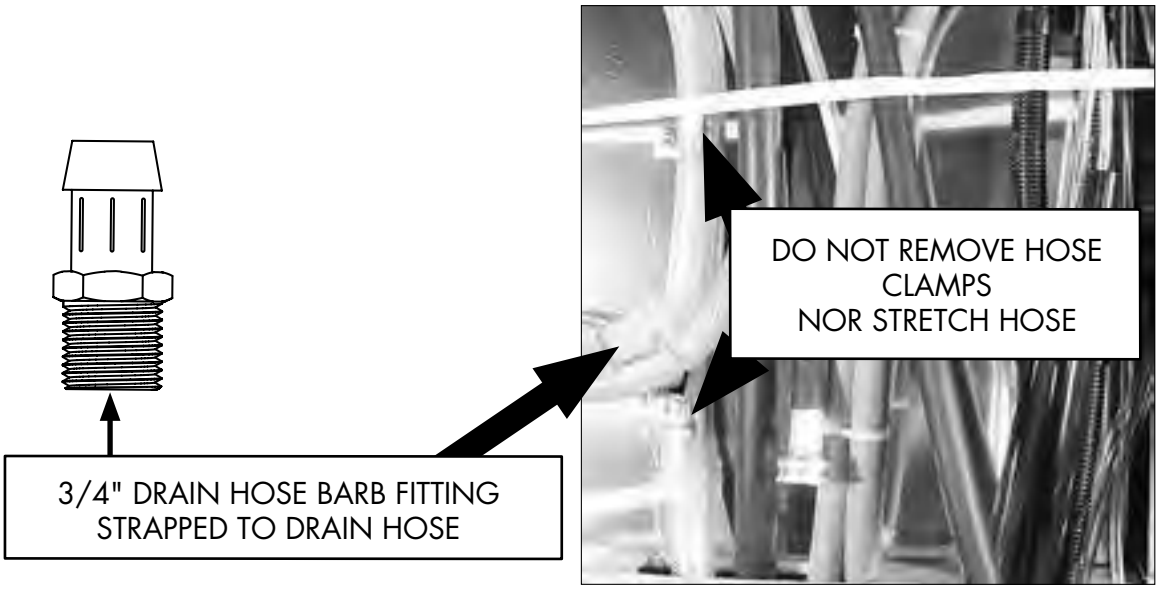

Drain Connection - UL130 *(continued)*

NOTE
Plumbing connections must comply with national, provincial local plumbing and sanitary codes.

DO NOT REMOVE THE CLAMPS HOLDING THE DRAIN HOSE TO THE BACK OF THE DISHWASHER.

DO NOT CONNECT THE DRAIN HOSE TO A DISPOSER.

DO NOT REDUCE THE SIZE OF THE DRAIN HOSE CONNECTION NOR USE A DOMESTIC DRAIN FITTING.

DO NOT ADD ADDITIONAL LENGTH TO THE DRAIN HOSE.

DO NOT ALLOW THE DRAIN HOSE TO KINK.

For a Direct Drain Connection:

1. Install the drain hose to an 1-1/2" or larger "WYE" vented drain fitting.

2. CONNECTION TO A "TEE" FITTING WILL PREVENT THE DISHWASHER FROM DRAINING COMPLETELY.

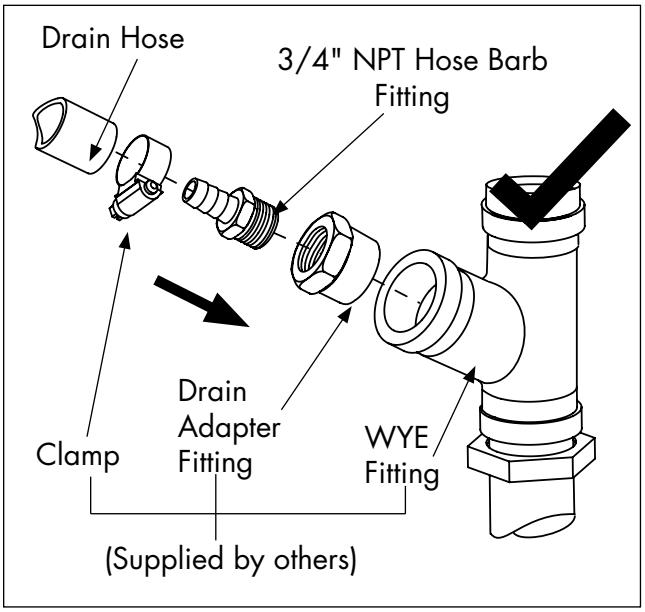

DO
connect the dishwasher flexible drain hose to a WYE drain fitting.

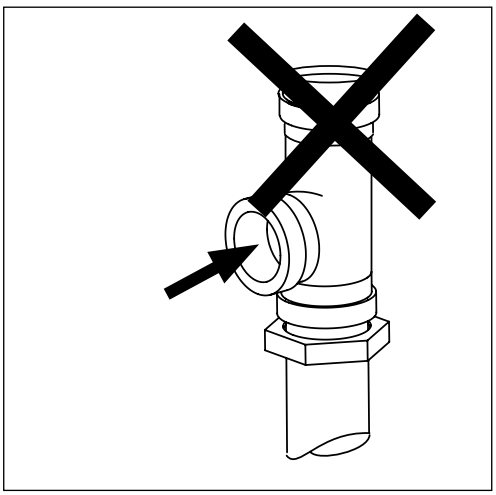

DO NOT
connect the dishwasher flexible drain hose to a TEE drain fitting.

For an Indirect Drain Connection:

1. A 1" [25.4mm] minimum air gap must be provided between the outlet of the dishwasher drain hose outlet and the flood-level rim of the floor drain, floor sink or any other locally approved drain receptacle. (See illustration below.)

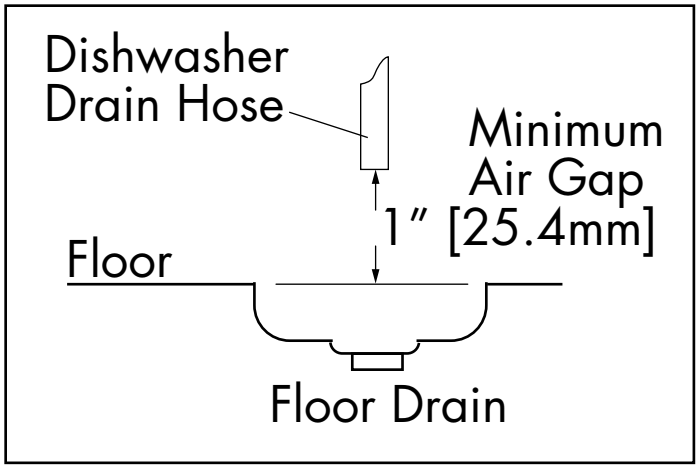

! VERY IMPORTANT !
IMPROPER INSTALLATION OF MACHINE DRAIN HOSE.
Machine drain problems are often the result of improper installation and may not be covered by the limited warranty.

Pumps and Injection Points - Detergent, Rinse-aid and Sanitizer Dispensing Pumps - UL130

! VERY IMPORTANT !
ALWAYS USE A COMMERCIAL-GRADE NON-CHLORINATED DETERGENT.
PLACE THE CHEMICAL SUPPLY CONTAINERS AS CLOSE TO THE MACHINE AS POSSIBLE.

DO NOT ELEVATE THE CHEMICAL CONTAINERS ABOVE THE FINISHED FLOOR.

! VERY IMPORTANT !
Contact a chemical supplier for detergent and rinse-aid chemicals. The chemical supplier must adjust the chemical dispensing pumps for water hardness and food soil types.

1. The chemical dispensing pumps are located on a center bracket behind the lower-front access panel.
2. Each pump is equipped with 6 feet [1.8 m] of supply tubing, stiffener tubes, and strainers.
3. A RED label marked DETERGENT, a BLUE label marked RINSE-AID and a WHITE Label marked SANITIZER identify the chemical lines.
4. The chemicals enter the wash tank compartment through a fitting located on the rear right-hand side of the wash compartment.

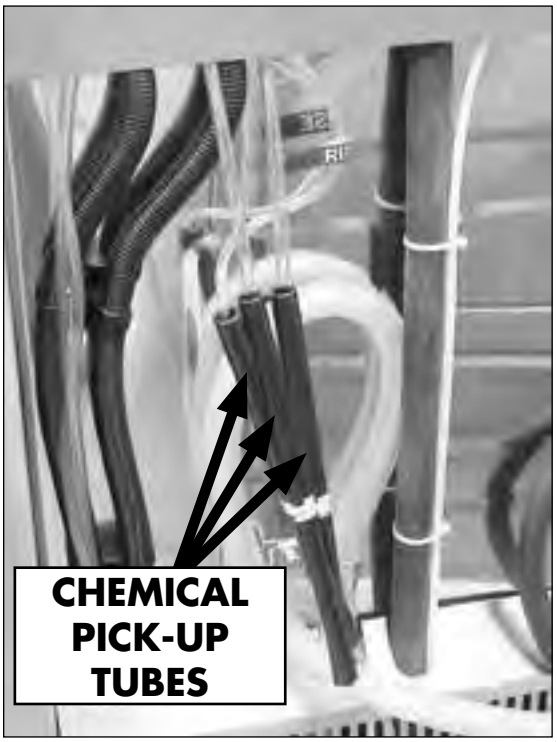

The chemical dispensing pick-up tubes are stowed at the rear of the dishwasher.

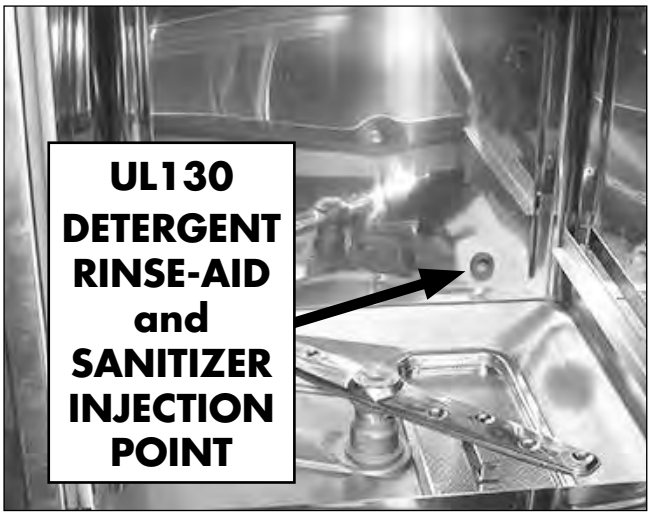

On the UL130, chemicals enter the wash tank through a fitting on the rear wall of the tank.

Pumps and Injection Points - Detergent, Rinse-aid and Sanitizer Dispensing Pumps - UL130

! VERY IMPORTANT !
CHEMICAL SQUEEZE TUBES SHOULD BE INSPECTED AND REPLACED EVERY 6 MONTHS

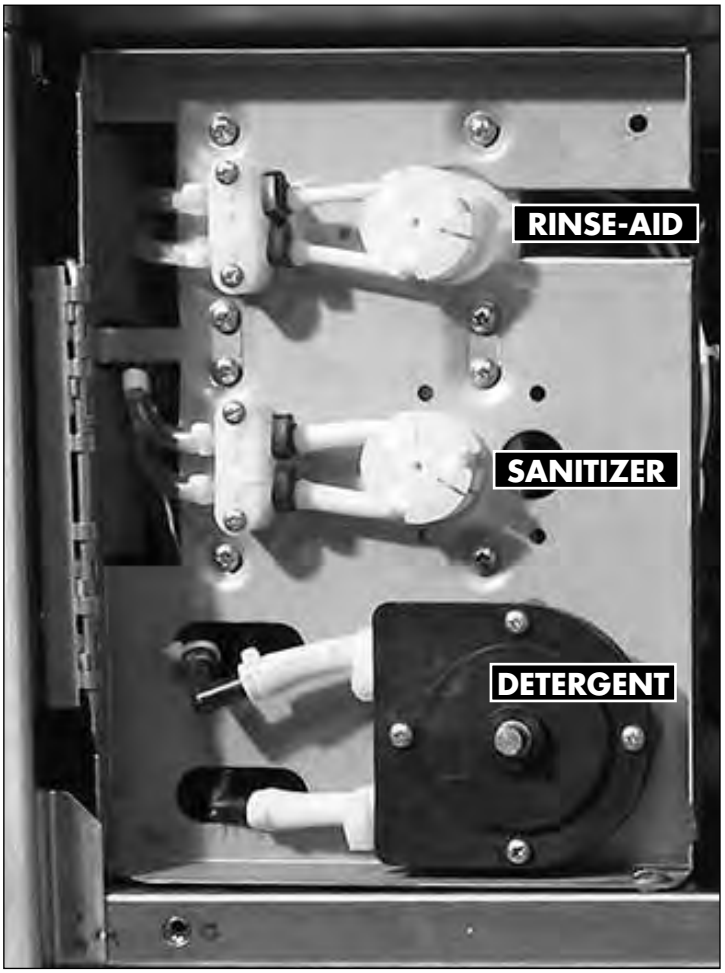

The chemical dispensing pumps are located on the bracket behind the lower-front access panel.

! VERY IMPORTANT !

5.25% sodium hypochlorite (chlorine beach) must be used as a sanitizing agent to provide a minimum concentration of 50 ppm in the final rinse for the USA and 100 ppm in Ontario, Canada. The 50 ppm or 100 ppm concentration must be checked using chlorine test strips to make sure that the proper concentration is maintained.

Pump Priming - Detergent, Rinse-aid and Sanitizer Dispensing Pumps

! VERY IMPORTANT !

The chemical dispensing pumps must be primed before operating the dishwasher and whenever the chemical container is changed.

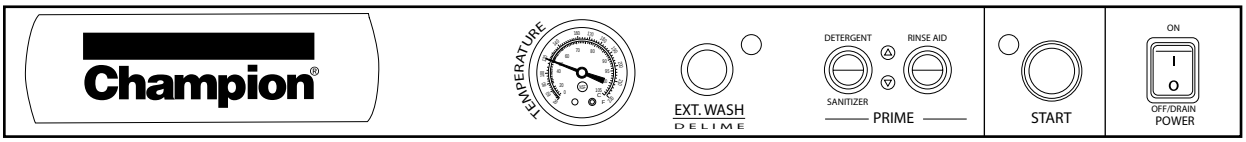

UL130 Control Panel

1. Make sure the chemical containers are full and the correct pick-up tubes are in their containers.
2. Turn the dishwasher power switch ON. The switch will illuminate and the dishwasher will fill with water.
3. Refer to the illustration below and note the two momentary push buttons provided to prime the detergent, sanitizer and rinse aid pumps.
4. Open the dishwasher door and observe the inlet chute on the rear right-hand side of the wash tank.
5. Push and hold the prime push button UP to the DETERGENT position until detergent is observed entering the wash tank compartment. Release the push button.
6. Push and hold the same push button DOWN until sanitizer is observed entering the wash tank compartment. Release the push button.
7. Push and hold the other push button UP to the RINSE AID position until rinse-aid is observed entering the wash tank compartment. Release the push button.
8. Priming is complete.

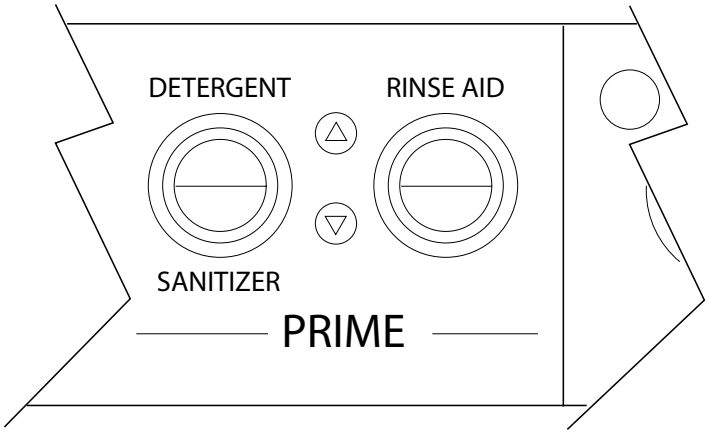

Pump and Tank Fill Adjustments

! ATTENTION !
The amount of dispensed chemical is determined by the run time of the dispensing pump.

1. Adjustment screws are provided for the dispensing pumps and for the wash tank fill. They are located on the right-hand side of the dishwasher behind the lower front access panel.
2. Make sure the chemical containers are full and the pick-up tubes are in their proper containers.
3. Turn the dishwasher power switch ON. The switch will illuminate and the dishwasher will fill with water.
4. Run a normal dishwasher cycle and test chmical concentrations according to the chemical supplier's instructions.

CAUTION:
Excessive pressure to the potentiometers when adjusting can result in bent or broken adjusting screws.

5. Each dispensing pump has a clearly marked adjustment screw. Turn the screw CW to increase the run time of the dispensing pump and CCW to reduce the run time of the dispensing pump.
6. The Fill adjustment screw will provide a small change in the tank water level. If a large adjustment is needed, check the incoming water pressure and make sure the fill hose is not kinked. If the above items are okay then the size of the incoming water supply should be checked.
   The incoming water supply line must be a minimum of 1/2" or larger.

Operation - Model UL130

Loading Dish Racks

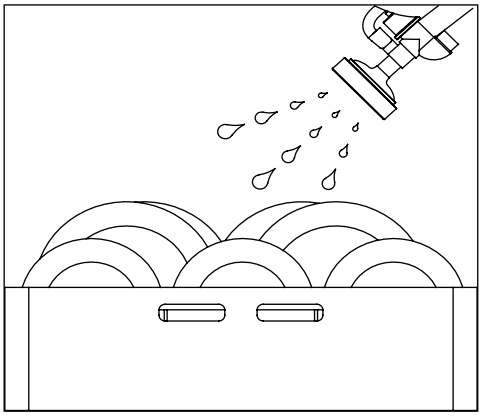

! VERY IMPORTANT !
Prescrap and rinse wares before loading into the machine.

! VERY IMPORTANT !
DO NOT OVERLOAD THE DISH RACK.
LOAD ONE DISH RACK INTO THE MACHINE AT A TIME.

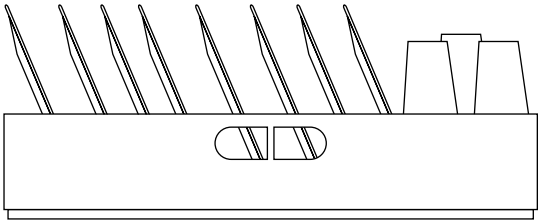

Load plates and glasses in a peg rack.

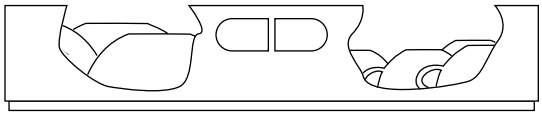

Load cups and bowls in a flat bottom rack.

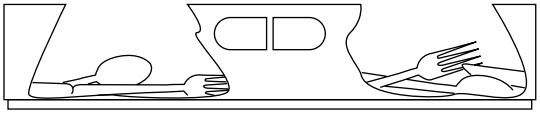

Load utensils in a single layer in a flat bottom rack.

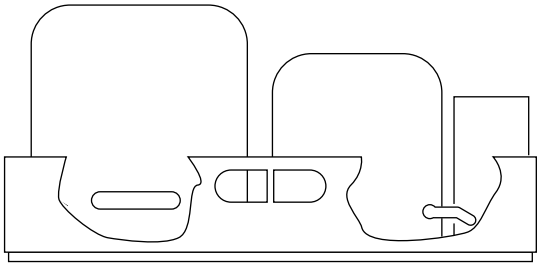

Load pots and pans in a flat bottom rack.

1. Prescrap and rinse the wares before loading to remove large food particles.
2. Load soiled wares into the dish rack. Place plates and glasses in a peg rack. Place cups and bowls in a flat bottom rack. Place utensils in a single layer in a flat-bottom rack. Place pots and pans in a flat-bottom rack.
   Do not overload the dish rack. Wash one dish rack at a time.
3. Slide one dish rack into the wash compartment making sure that wares do not interfere with the rotating spray arms. Do not wash more than one dish rack at a time.

Operation - Model UL130

Normal Wash Mode

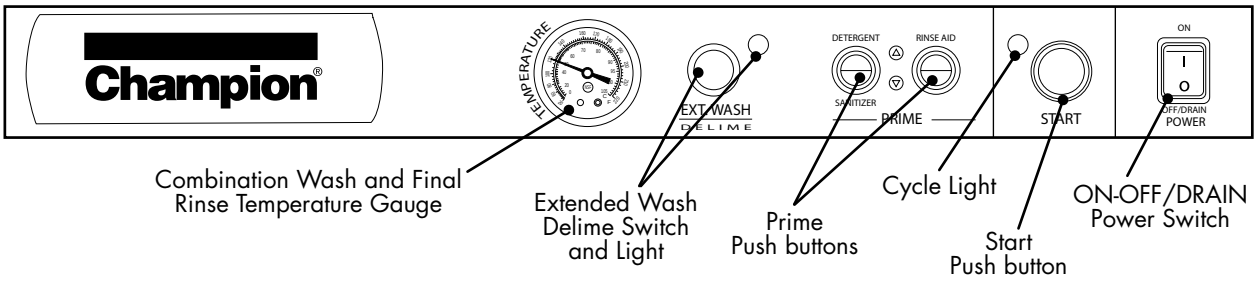

1. Close the dishwasher front door.
2. Push the dishwasher Power Switch UP to turn the power ON.
3. The power switch will illuminate and the machine will fill with water.
4. Wait until the wash temperature gauge indicates a minimum of 120°F/49°C.

RUN THE FIRST CYCLE WITH AN EMPTY DISH RACK TO HEAT THE WASH TANK INTERIOR.

5. Load the dish rack into the machine. Wash one dish rack at a time.
6. Close the door, then press the START BUTTON for 1 second. The green in-cycle light will illuminate and the wash cycle will begin. The total cycle is approximately 141 seconds.
7. Opening the door during a cycle will stop the dishwasher. If the door is open more than 5 seconds the cycle will restart from the beginning, if open less than 5 seconds the cycle
will resume where it left off when the dishwasher door is closed.
8. The final rinse cycle begins at the end of the wash cycle. The machine drains and then refills with fresh water hot water. Check the rinse temperature gauge during the final rinse. It must indicate a minimum of 120°F/49°C. The final rinse water is retained for the next wash cycle.
9. When the green cycle light goes out, open the door and remove the rack of clean wares.

! VERY IMPORTANT !

5.25% sodium hypochlorite (chlorine beach) must be used as a sanitizing agent to provide a minimum concentration of 50 ppm in the final rinse for the USA and 100 ppm in Ontario, Canada. The 50 ppm or 100 ppm concentration must be checked using chlorine test strips to make sure that the concentration is maintained.

Extended Wash Mode - Model UL130

The Extended Wash Mode is used to wash heavily soiled items such as pots, pans and other wares that require more washing time than the standard Normal Wash Mode.
The dishwasher will remain in the Extended Wash Mode until the operator exits the mode or 15 minutes has elapsed.

1. Load a dish rack into the dishwasher, close the door and press the START button.
2. The green in-cycle light will illuminate and the dishwasher will begin a normal wash cycle.
3. Wait 10 seconds for the detergent to enter the wash compartment before pressing the EXT WASH button.

Press the EXT WASH button to place the machine into the extended wash mode to clean heavily soiled wares.

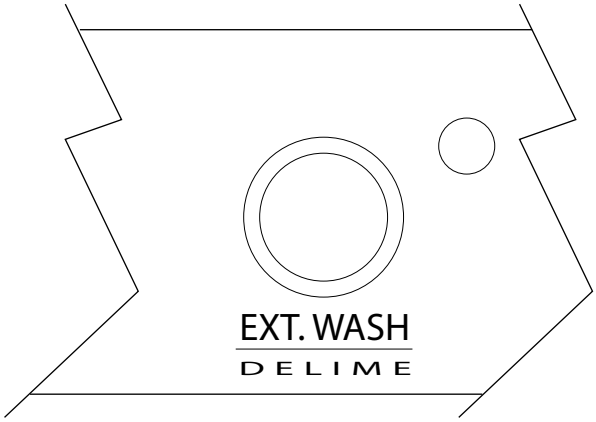

4. Press the EXT WASH button to place the dishwasher in the Extended Wash Mode.
5. The green extended wash light will illuminate indicating that the machine is in the Extended Wash Mode.
6. The dishwasher will continue to wash for a maximum of 15 minutes or until the operator presses the EXT WASH button again whichever occurs first.
7. Press the EXT WASH button. The green extended wash light will go out indicating that the dishwasher has returned to the Normal Wash Mode.
8. The dishwasher will finish the wash cycle and perform a final rinse of the wares.

Drain Mode

The dishwasher will enter the drain mode whenever the Power Switch is pushed down to the OFF/DRAIN position.

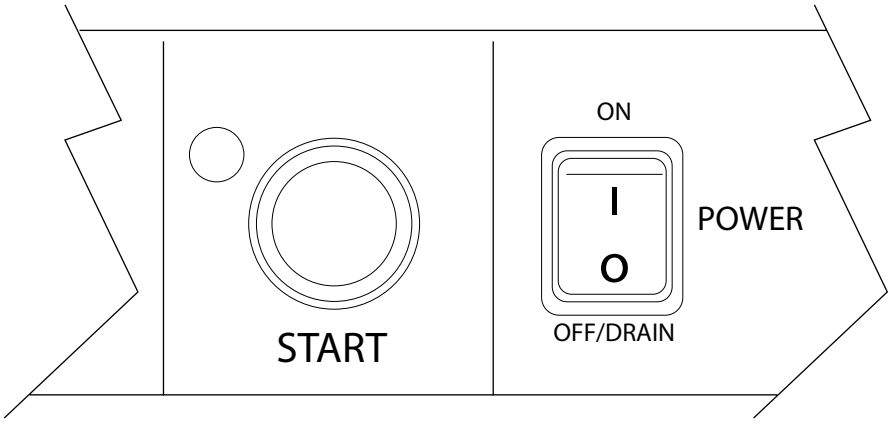

1. Push the illuminated power switch down to the OFF/DRAIN position. The power switch light will go out.
2. The cycle light will illuminate and the machine will drain.
3. The machine, will flush, perform 3 short drain cycles and then drain completely.
4. The cycle light will go out indicating that the drain cycle is complete.

! VERY IMPORTANT !
Draining Problems Related To Improper Installation.
Problems with machine draining are often the result of improper installation. The drain hose is looped and clamped as shown in the photo below and must not be changed.

The drain hose is looped and clamped and must not be changed. Altering the drain hose routing may result in the machine's inability to drain or may cause the machine to siphon the water out of the machine.

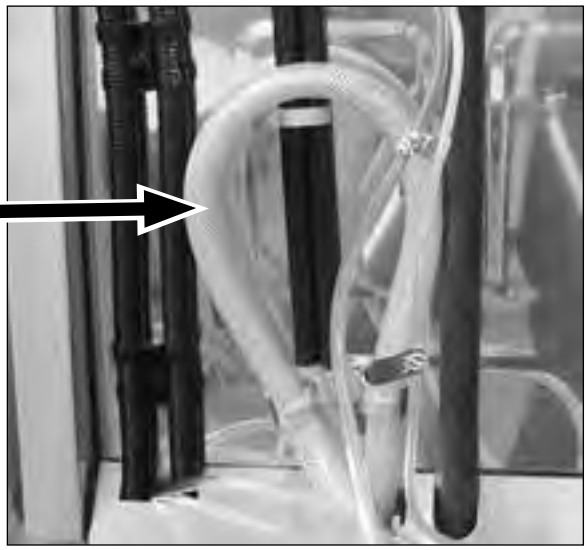

Cleaning - Model UL130

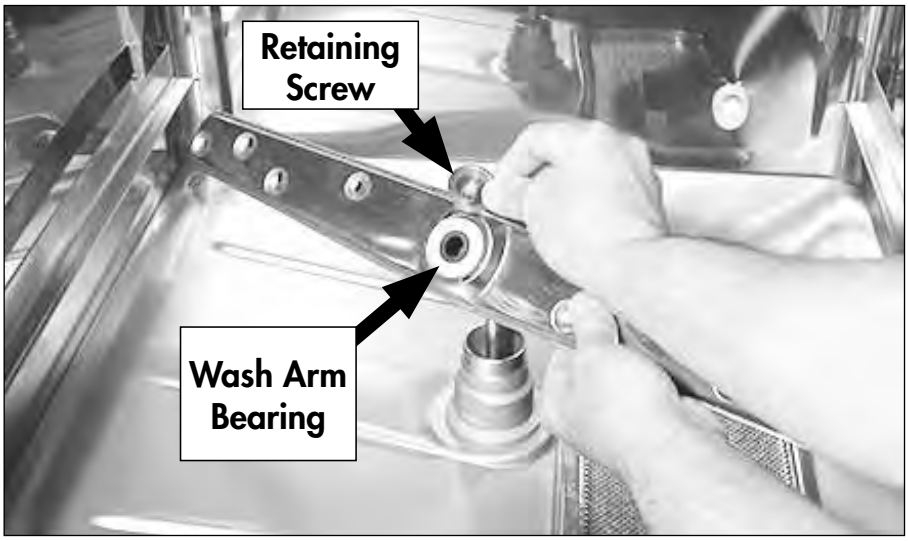

! VERY IMPORTANT !

DRAIN AND CLEAN THE DISHWASHER EVERY 2 HOURS OF CONTINUOUS OPERATION, AFTER EACH MEAL PERIOD, AND AT THE END OF THE DAY.

Cleaning the wash tank:

1. Remove the upper and lower spray arms and flush clean in a sink.
2. Remove the scrap screen taking care that debris does not fall off the screen and into the wash tank or sump. Flush the screen clean in a sink. Be sure to back-flush the screen.
3. DO NOT strike the scrap screen on solid surfaces.
4. Check the sump for foreign material.
5. Clean the wash pump strainer in the bottom of the sump.
6. DO NOT scrub the interior with metallic scrub pads.
7. Check the sump heating element for lime deposits and gently remove with a scouring pad. DO NOT USE METALLIC PADS.
8. Wipe the exterior of the dishwasher with a soft clean cloth and a mild detergent. DO NOT USE BLEACH.
9. Leave the door open to aid in overnight drying.

Cleaning the wash arms:

1. There are two combination wash/rinse arms in the wash tank. They are interchangeable.
2. The wash arms are should be removed and thoroughly flushed clean in a sink.
3. Special attention should be paid to the cleaning and inspection of the wash arm bearings making sure they are clean and free of excessive wear.
4. If the bearings are damaged, contact an authorized service agent for replacement.

Cleaning - Model UL130 (continued)

Scrap Screen and Sump Strainer

1. Lift the scrap screen straight up and out of the machine to prevent food particles from falling into the tank sump.

2. Flush the scrap screen in a remote sink making sure to back-flush both side of the screen.

3. Wipe the tank sump of water and debris.

4. Carefully inspect the sump strainer. This strainer is not removable but must be thoroughly cleaned before reinstalling the scrap screen.

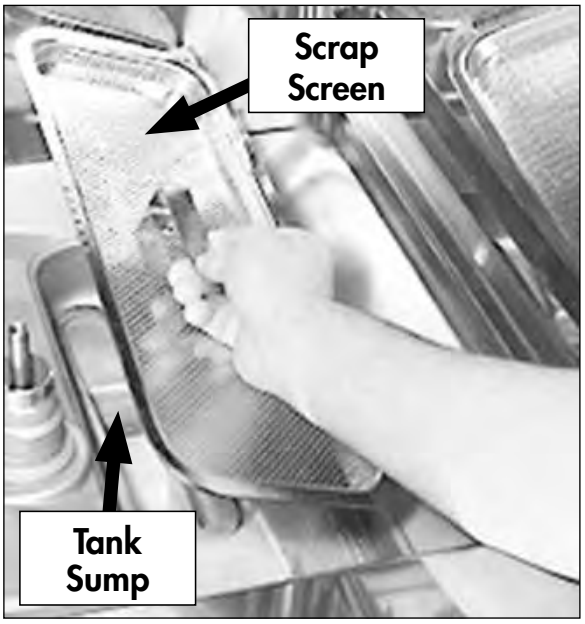

! ATTENTION !

A CLOGGED SUMP STRAINER WILL PREVENT THE PROPER WASHING, RINSING AND DRAINING OF THE MACHINE.

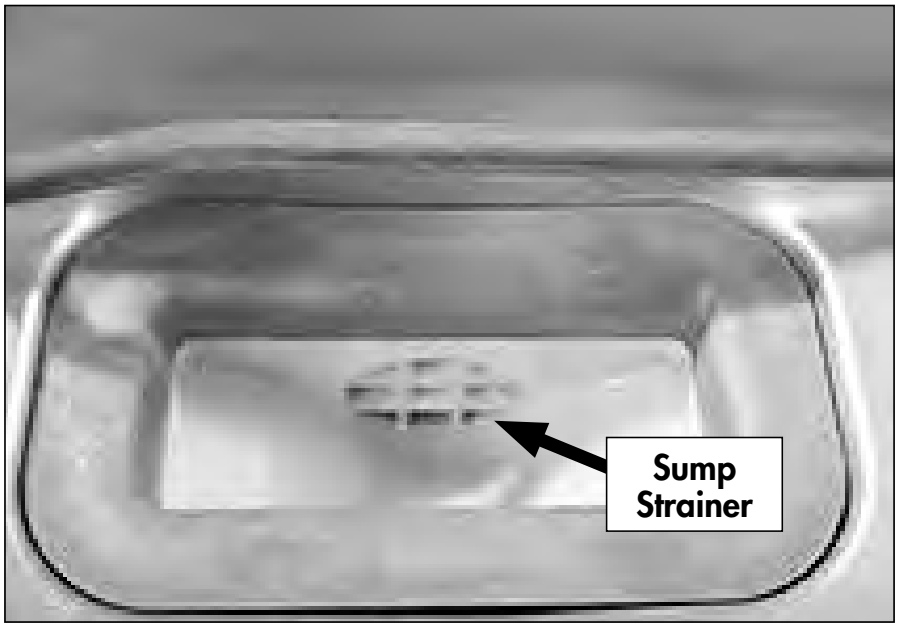

! ATTENTION !

WIPE THE EXTERIOR OF THE MACHINE WITH A SOFT CLOTH AND MILD DETERGENT. DO NOT SPRAY THE EXTERIOR WITH WATER.

LEAVE THE DOOR OPEN TO AID IN OVERNIGHT DRYING.

Deliming - Model UL130

DANGER:
Death or serious injury may result when deliming solution is mixed with sodium hypochlorite sanitizing agent. Mixing may cause hazardous gases to form. Deliming solution and other acids must never be mixed with chlorine, iodine, bromine, or fluorine.

CAUTION:
Skin contact with deliming solutions can cause severe irritation and possible chemical burns. Always wear eye protection, rubber gloves and protective clothing when handling chemicals.

De-lime Mode - Model UL130

The EXT. WASH/DELIME switch is used to the de-lime the machine.

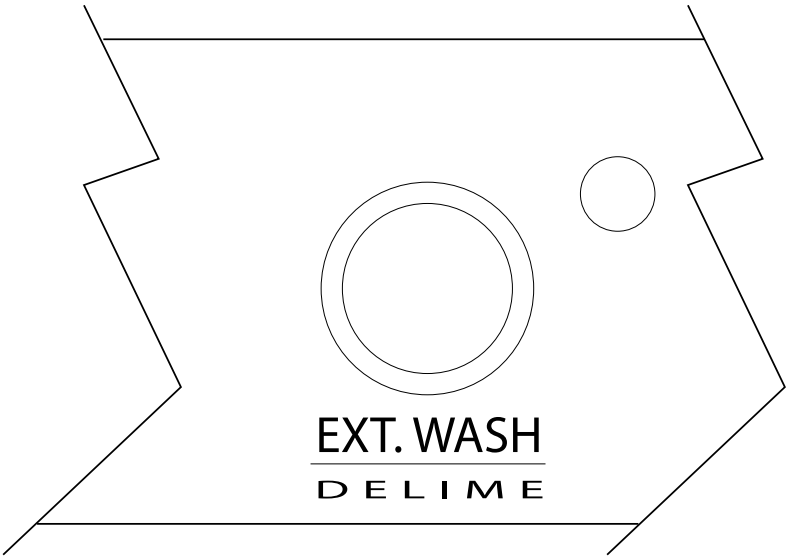

Model UL130
Extended Wash/Delime Push button

Model UL130 Deliming

Follow the steps below to de-lime the UL130:

1. Open the dishwasher door and remove any dish racks.

2. Turn the power switch on the dishwasher to the ON position.

3. Remove the detergent and rinse-aid, and sanitizer chemical supply tubing from their chemical supply containers.

4. Place the tubing in a container of hot water.

5. Press and hold the prime switch UP in the DETERGENT position to flush the detergent from the supply tubing. Release the switch.

6. Press and hold the prime switch DOWN in the SANITIZER position to flush the sanitizer from the supply tubing. Release the switch.

7. Press and hold the rinse-aid prime switch UP in the RINSE AID position to flush the rinse-aid from the supply tubing. Release the switch.

8. Turn the dishwasher power switch to OFF/DRAIN to drain the wash tank. The green cycle light will go out in about 2 minutes.

9. **Always wear eye protection, rubber gloves and protective clothing when handling chemicals.** Open the door and carefully add the deliming chemical to the wash tank in accordance with your chemical supplier's instructions. Be careful to avoid splashing.

10. Close the door and press the EXT WASH/Delime push button three times.

11. The EXT WASH green indicator light will illuminate and the machine will run for 23 minutes.

12. Check the deliming results and if scale is still present repeat steps 9-11.

13. Push the power switch ON to refill the machine and return the dishwasher to normal operation.

14. Return chemical supply tubing to their containers and prime the chemical lines.

Follow the maintenance schedules below to keep the dishwasher operating most efficiently.

Daily Maintenance

1. Make sure the water supply is on and that the drain is not clogged.
2. Check the temperature gauges and/or displays to ensure they are operating.
3. Make sure the dish racks are in good condition.
4. Check the chemical containers and refill as required.
5. Follow the cleaning procedures provided in the *UL130 Cleaning Section*.

Weekly Maintenance

1. Perform Steps 1-5 in the Daily Maintenance.
2. Inspect water lines for leaks.
3. Check for water leaks underneath the dishwasher.
4. Make sure the flexible water fill and drain hoses are not kinked.
5. Make sure that the dishwasher is level.
6. Clean accumulated lime deposits from the wash tank heating element.
7. Inspect the scrap screen and replace it if damaged.
8. Check the spray arms and replace or repair if damaged.

Monthly Maintenance

1. Perform the Daily and Weekly Maintenance listed above.
2. Clean the chemical dispenser pick-up tubing for the chemical dispensing pumps.

To clean the pick-up tubing:

1. Remove the pick-up tubes from their containers.
2. Place each tube in a separate container of hot water.
3. Press and hold the PRIME buttons UP and DOWN until water flows into the wash tank compartment.
4. Return the pick-up tubes to their containers.
5. Run 3 empty dishwasher cycles to flush any chemicals from the dishwasher wash compartment.
6. Return the pick-up tubes to their containers and prime the chemical lines.

NOTE:
There are no lubrication points on the dishwasher.

Troubleshooting
All Models

Illustrations ***Page***

Troubleshooting Chart - UH130, UH130B, UH230, UH230B 54

Wash Codes Temperature Display Board - UH130, UH130B, UH230, UH230B, UH330B 55

Rinse Codes Temperature Display Board - UH130, UH130B, UH230, UH230B, UH330B..... 56

Booster Codes Temperature Display Board - UH130, UH130B, UH230, UH230B, UH330B..... 57

Timer Board Connection Diagram - All Models 58

Timer Board Diagnostic Testing - UH130, UH130B, UH230, UH230B 59

Temperature Display Board Power Terminal Connections..... 60

Temperature Display Board M3-M4 Selector Slide Switch..... 61

Temperature Display Board Diagnostics 62

Booster/Wash Tank Heater Interlock Circuit Operation - UH130B, UH230B, UH330B..... 63

Condition	Cause	Solution
Dishwasher will not run.	Door not closed. Main power OFF. Dishwasher OFF.	Close door completely. Check breaker on panel. Turn dishwasher power switch ON.
Low or no water.	Main water supply off. Fill hose kinked. Low incoming water pressure Solenoid valve defective. Solenoid strainer clogged. Circuit board fuse blown.	Open supply valve. Straighten fill hose. Set flowing water pressure to 20-22 PSI. Install repair kit or replace. Clean strainer. Contact service agent..
Chemicals won't feed into dishwasher.	Chemical supply low. Supply tubing damaged. Supply tubing kinked. Pick-up tube clogged Chemical circuit board fuse blown.	Refill chemical container. Replace tubing. Straighten tubing. Clean/replace tube. Contact service agent.
Low water pressure pumped from wash spray arms.	Clogged scrap screen. Clogged spray arms. Clogged pump intake screen.	Clean scrap screen. Clean spray arms. Inspect sump and clean pump intake screen.
Poor wash results.	Excessively hard water. Water temperature low. Thermistor defective. (See chemicals won't feed above.) (See low or no water above.) Detergent injector defective. Chemical circuit board fuse blown. Wares incorrectly loaded. in dishrack. Booster high limit tripped. Wash tank high limit tripped.	Contact chemical supplier. Raise incoming water temperature to 140°F Replace thermistor. (See chemicals won't feed above.) (See low or no water above.) Replace squeeze tube. Replace injector motor. Clean tubing and pick-up. Contact service agent. Reposition wares or reduce amount of wares in dish racks. Reset or replace high limit. Reset or replace high limit.
Water has drained out of the wash tank while the dishwasher was idle.	Anti-siphon loop in drain hose has been removed. Drain hose clamp is not holding the drain hose in proper position. Building plumbing does not provide correct air vent to prevent siphoning.	Re-route drain hose. DO NOT STRETCH HOSE Replace/adjust hose clamp making sure goose-neck is maintained. Contact service Agent and/or plumber.
Dishwasher stays in wash cycle.	Incoming water supply cold Rinse Sentry extends wash mode for a maximum time of 5-minutes to allow final rinse water booster temperature to reach 180˚F/82˚C. Dishwasher is operating in Extended Wash Mode.(UH230B, Only)	Raise incoming water temperature. Adjust/replace final rinse booster thermistor. Push EXT WASH button to exit the Extended Wash mode.

Digital Temperature Display Codes

Display codes that appear in the display windows indicate the operating condition of the machine. Refer to the illustrations below for the meaning of the codes.

Wash Display Codes

WASH DISPLAY CODE	CAUSE
Lo (WASH TEMP) 188 (RINSE TEMP)	Wash temperature is below 100°F
HHH (WASH TEMP) 186 (RINSE TEMP)	Wash temperature is above 180°F
dry (WASH TEMP) 171 (RINSE TEMP)	Wash tank is empty and tank heater is on. **CAUTION:** The tank may be extremely hot.
E (WASH TEMP) 179 (RINSE TEMP)	Defective wash thermistor or open, broken, wire between thermistor and board or loose connection.

Rinse Display Codes

RINSE DISPLAY CODE	CAUSE
159 (WASH TEMP) Lo (RINSE TEMP)	Rinse temperature is below 100°F
156 (WASH TEMP) HHH (RINSE TEMP)	Rinse temperature is above 200°F
149 (WASH TEMP) dry (RINSE TEMP)	Booster tank is empty & booster heater is on. **CAUTION:** Temperature in the booster may be extremely hot
146 (WASH TEMP) E (RINSE TEMP)	Defective rinse thermistor or open, broken, wire between thermistor and board or loose connection.

Booster Display Codes

Error Codes for Booster and Final Rinse Thermistors Only.

DISPLAY CODES	CAUSE
150 (WASH TEMP) bH (RINSE TEMP)	Booster overtemp lockout because booster temperature is greater than 210°F. **NOTE:** Booster is locked out for 10 minutes before being re-energized.
150 (WASH TEMP) bE (RINSE TEMP)	Booster therrmistor is defective or disconnected, broken wires. **NOTE:** After the therrmistor is reconnected, there is a 5 second delay before the display is re-energized.
150 (WASH TEMP) bEE (RINSE TEMP)	Both booster and final rinse display thermistors are defective, unplugged, or open or broken wires between the display and thermistor. **NOTE:** After a therrmistor is reconnected, there is a 5 second delay before the display is re-energized.

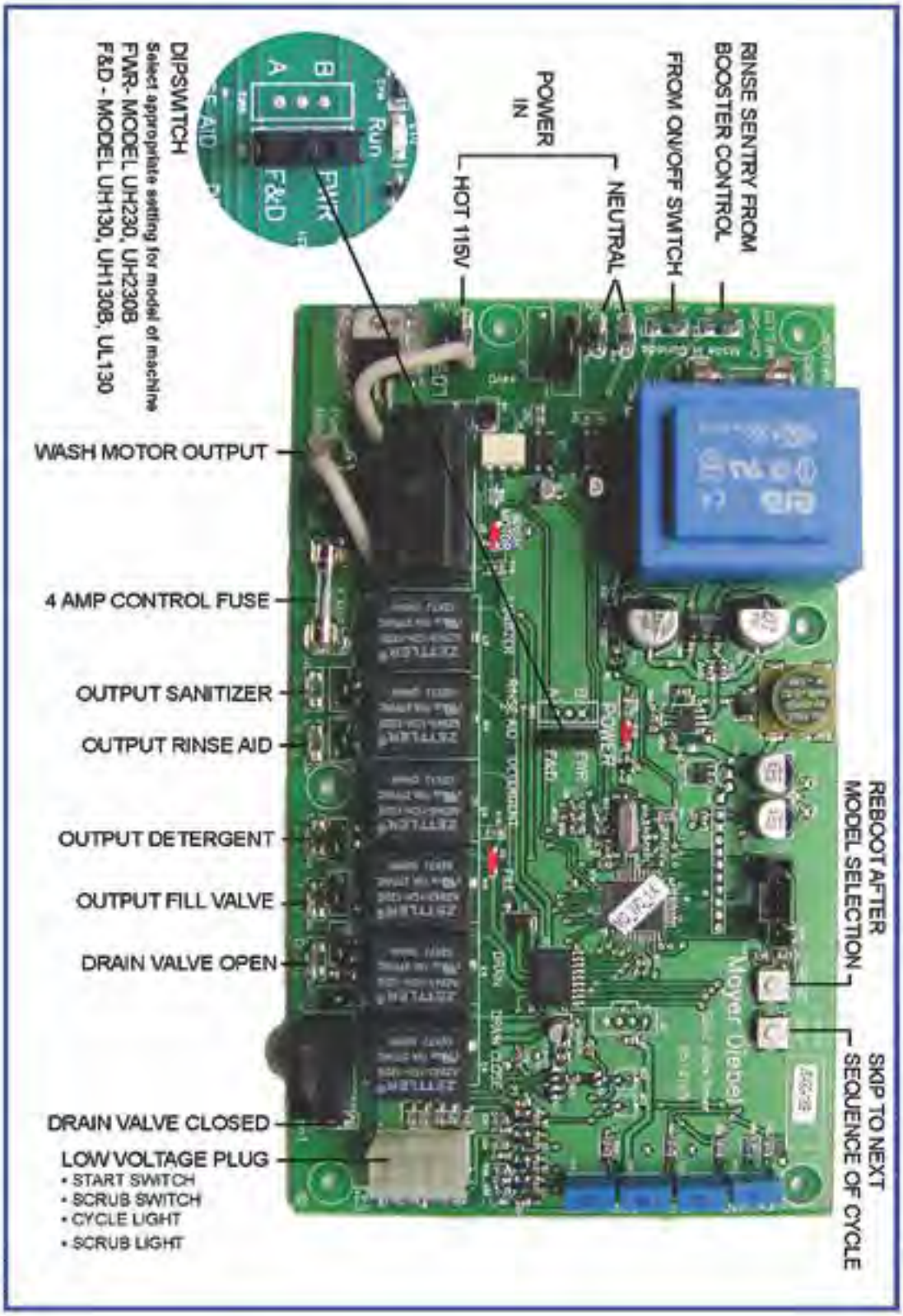

Timer Connection Diagram

Solid State Timer P/N 0712105

January 2009

05112924

Diagnostic Testing for the Solid State Timer Board, P/N 0712105

Beginning with S/N W081217467 and above

1

Before testing, Press the dishwasher power switch to OFF/DRAIN and allow the machine to complete the drain cycle.

Check the incoming voltages.

2

With the Power switch in the OFF/DRAIN position, press the START button 2 times.

If the drain valve opens and closes 5 times then the DRAIN VALVE is okay.

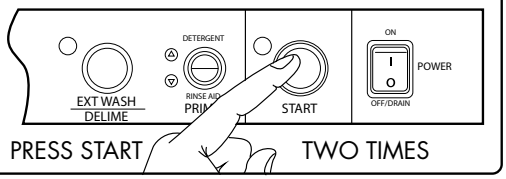

3

Open the door.

If the green cycle indicator light blinks continuously for 10 seconds, then the DOOR SWITCH and the CYCLE LIGHT are okay.

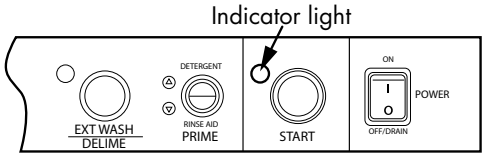

4

Press and release the START button.

If the green cycle indicator light flashes then the START BUTTON is okay.

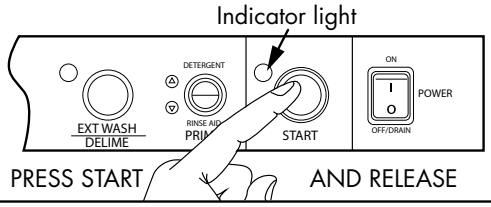

5

With the Power switch in the OFF/DRAIN position, press the START button 3 times.

The timer board and the following components are okay if the components run consecutively for a few seconds in the following order:

1. Fill Valve
2. Detergent Pump
3. Rinse-aid Pump
4. Drain Valve opens and then closes
5. Wash Pump
6. Drain Pump or Sanitizer Pump

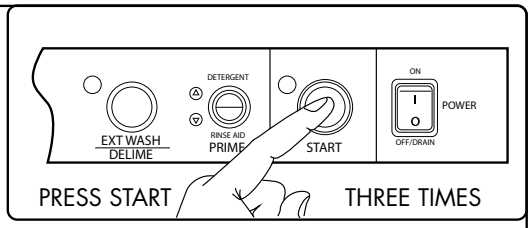

6

Troubleshooting - See below if one or more of the components in Step 5 did not run.

CONDITION	POSSIBLE CAUSE/SOLUTION
A single component in Step 5 does not run.	Check the component that did not run.
Wash pump only component that runs (Except UH330B, 601HT)	Check timer bd 4A fuse. (All except UH330B & 601HT)
Wash pump only component that runs (UH330B, 601HT ONLY)	Check timer bd 6A fuse. (UH330B & 601HT ONLY)
Wash pump only component that won't run. 4A/6A fuse okay.	Check pump/motor - see troubleshooting guide.
None of the components in Step 5 run.	Check neutral wire - see troubleshooting guide.

0512979 rev. B

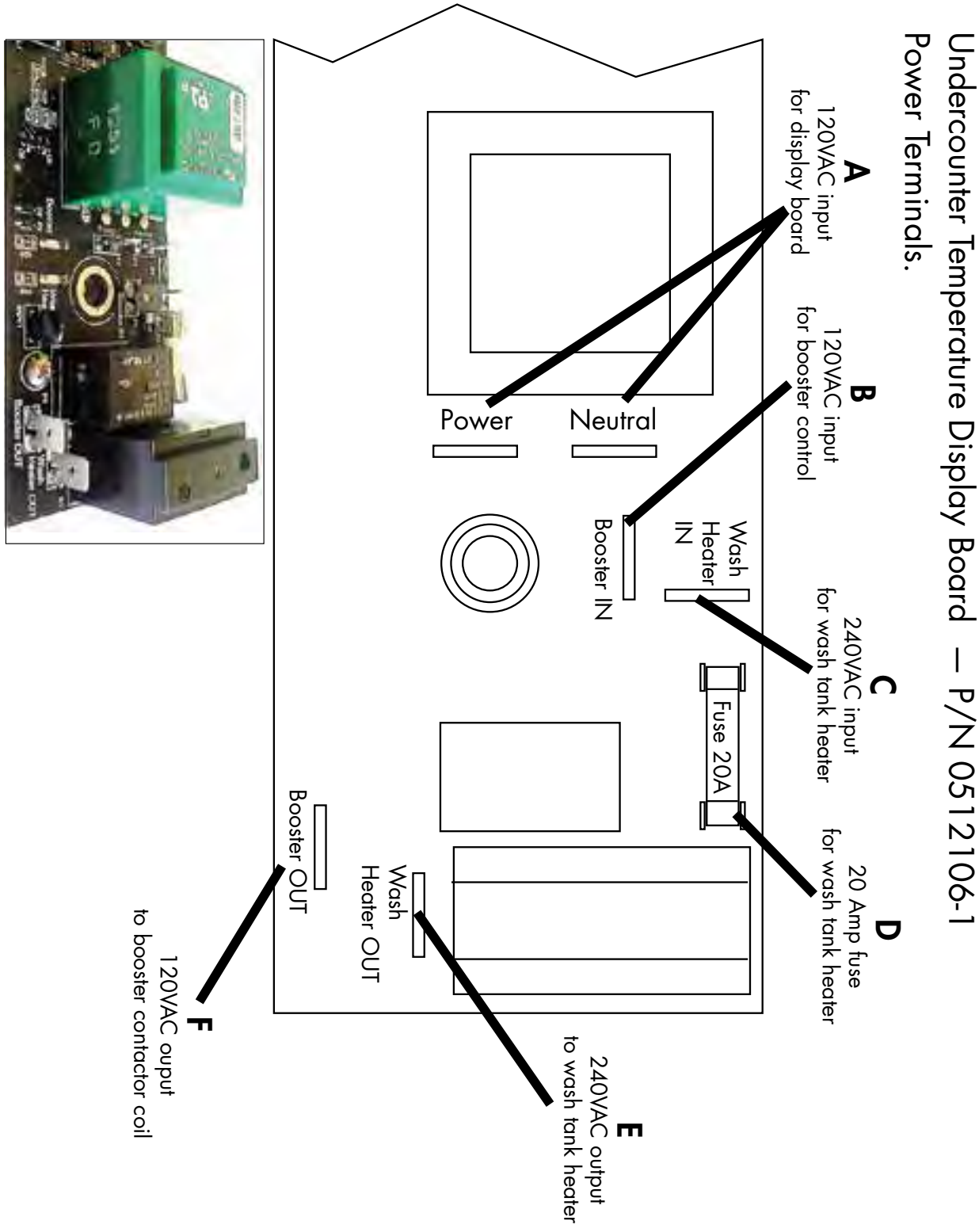
Undercounter Temperature Display Board — P/N 0512106-1
Power Terminals.
A
120VAC input
for display board
B
120VAC input
for booster control
C
240VAC input
for wash tank heater
D
20 Amp fuse
for wash tank heater
E
240VAC output
to wash tank heater
F
120VAC ouput
to booster contactor coil
Power
Neutral
Wash
Heater
IN
Booster IN
Fuse 20A
Wash
Heater OUT
Booster OUT

Undercounter Temperature Display Board — P/N 0512106-1
M3 - M4 Model Selector Slide Switch

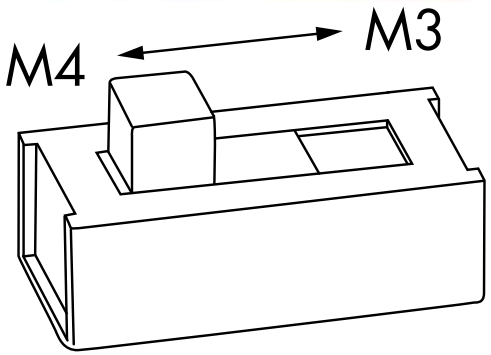

! ATTENTION — VERY IMPORTANT !

Before installing a new version display board, you must select the model type using the M3 - M4 Switch located at the bottom center of the circuit board.

M3 Setting

Slide the selector switch to the M3 position for machines equipped with thermostats.

M4 Setting

Slide the selector switch to the M4 position for machines equipped with thermistors only.

NOTE:
The machine will not operate properly if the selector switch is set to the wrong position.

Undercounter Temperature Display Board
P/N 0512106-1

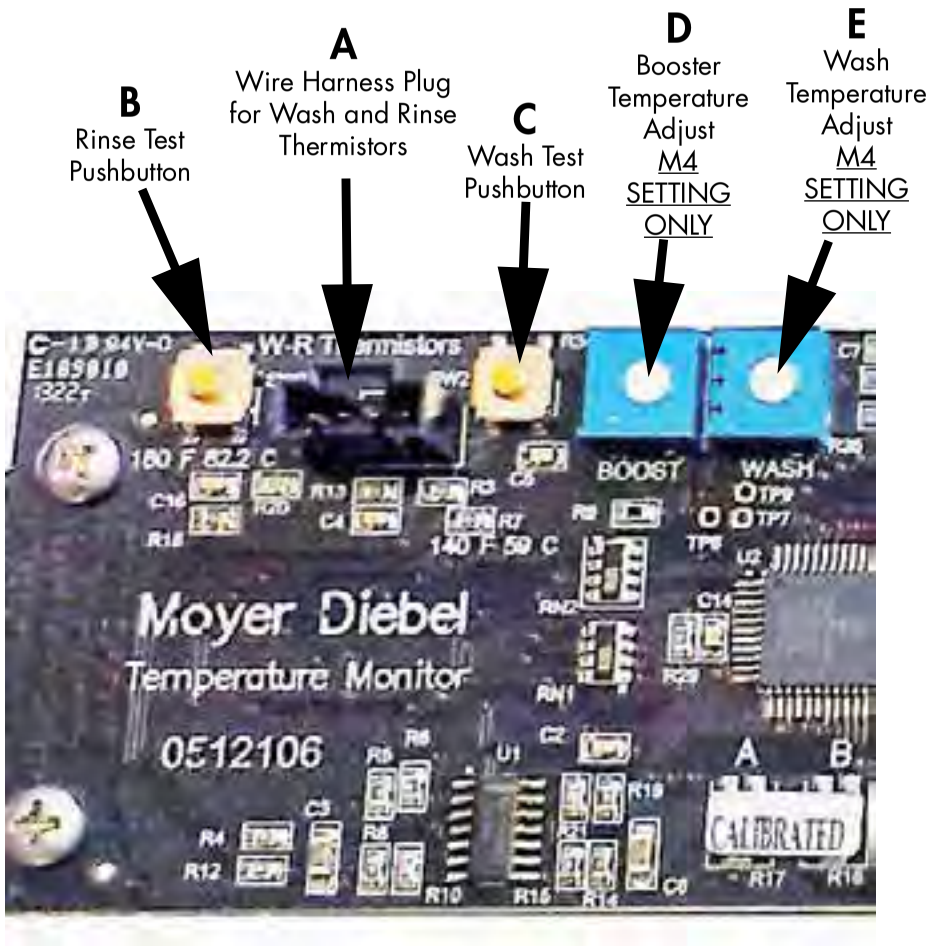

Diagnostics

A - When testing the circuit board operation, disconnect the harness from this plug. The wash and rinse displays will display E.

B - Push and hold the rinse test pushbutton. A numerical value of 179-180 should appear in the rinse temperature display window indicating the circuit board is operating normally.

C - Push and hold the wash test pushbutton for 10 seconds A numerical value of 140 should appear in the wash temperature display window indicating the circuit board is operating normally.

Temperature Adjustments

When performing diagnostics the values are displayed in °F even if the display is set for °C.

A F/C Slide switch is provided on the board to change the display from the factory default setting of °F to the optional °C.

D - Turn clockwise to increase the booster temperature. Full range is 3/4 turns 180-200°F. DO NOT FORCE PAST THE STOPS.

E - Turn clockwise to increase the wash temperature. Full range is 3/4 turns 120-160°F. DO NOT FORCE PAST THE STOPS.

Booster Heater/Wash Tank Heater Interlock Circuit Operation

For Models UH130B, UH230B The booster heater/wash tank heater interlock circuit removes power from the wash tank heater whenever the booster heater contactor energizes. The illustration below shows how the booster heater contactor is wired.

The booster heater contactor is located on the center of the base behind the lower front access panel.

Interlock Circuit Operation

1. The dishwasher fills with water when the main power switch on the dishwasher is turned on. The booster heater thermistor calls for heat which energizes the booster heater contactor.
2. The auxiliary contact on the top of the contactor opens and removes power from the wash tank heater.
3. When the booster heater thermister is satisfied, the booster heater contactor de-energizes and the auxiliary contacts close applying power to the wash tank heater.
4. This operation is repeated whenever the booster thermistor calls for heat.

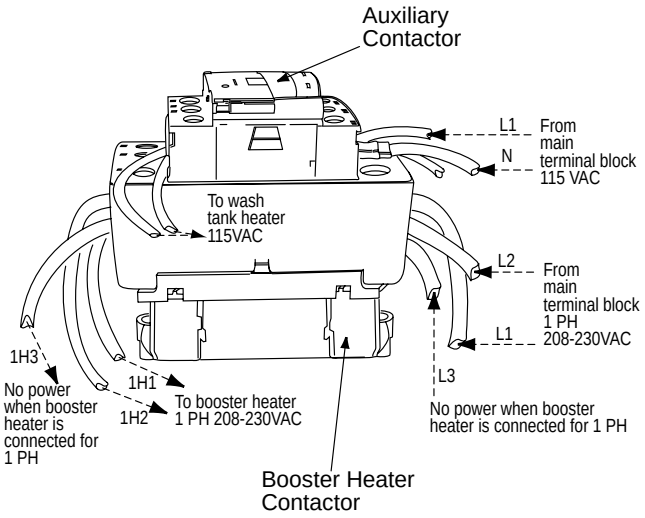

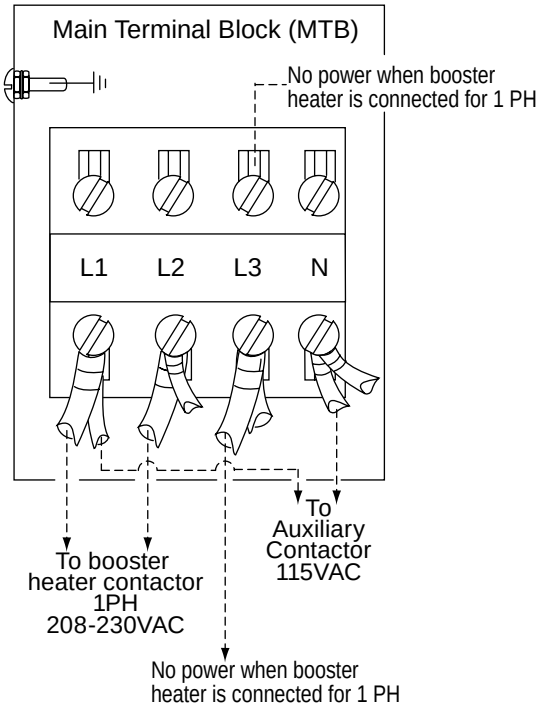

This Page Intentionally Left Blank

Model UH330B High Temperature Undercounter Dishwasher with Heat Recovery and Built-in Booster

Receiving - UH330B

NOTE:
The installation of your dishwasher must be performed by qualified service personnel familiar with food service equipment and must comply with all local health codes.
Problems due to improper installation are not covered by the Limited Warranty.

NOTE:
The installation of the dishwasher must comply with all local electrical, plumbing, health and safety codes or in the absence of local codes, installed in accordance with the applicable requirements in the National Electrical Code, NFPA 70, Canadian Electrical Code (CEC), Part 1, CSA C22.1; and the Standard for Ventilation Control and Fire Protection of Commercial Cooking Operations, NFPA 96.

Turn to the front of this manual and follow the instructions to register your product online or by fax.

Placement - UH330B

CAUTION:
Be careful when lifting and moving the dishwasher to prevent damage to the machine.

NOTE:
The installation of the dishwasher must comply with local health codes.

NOTE:
The dishwasher front-to-back dimension with the door open is 42-3/8" [1076 mm]. The clearance to the back wall is 2" [51mm].

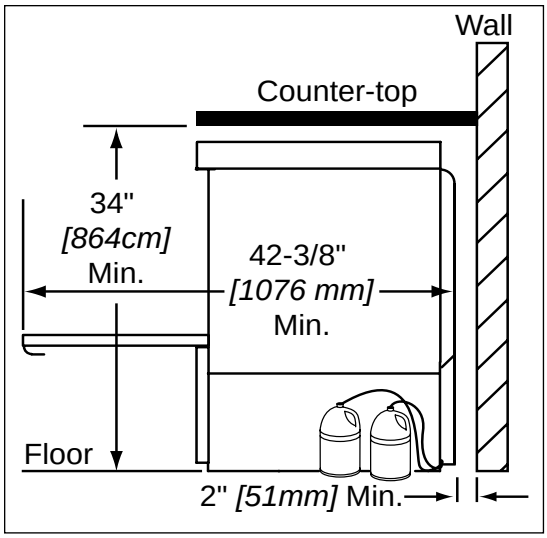

1. Inspect the outside of the dishwasher carton for signs of damage.
2. Remove the carton and inspect the dishwasher for damage.
3. Check for any options or accessories that may have shipped with your dishwasher.
4. Compare the installation site utility connections with the dishwasher utility connections and make sure they are the same.
5. The dishwasher can be installed as a free-standing unit or under a counter-top. The typical counter-top height in most locations is 34" [864 mm]. It is highly recommended that the underside of the counter-top be clad in metal.
6. Under counter installations should provide storage space for the dishwasher chemical supply containers. Do not elevate the containers above the finished floor.
7. Chemical supply containers should be placed as close to the machine as possible and the chemical tubing taped to the back of the machine should be repositioned before permanently placing the machine.
8. The dishwasher has 4 adjustable feet for leveling.
9. Place the dishwasher in its permanent location. and level it front-to-back and side-to-side.

Electrical Connections - UH330B with Built-in Booster
1PH and 3PH Wiring Diagrams

! ATTENTION !

ALL DISHWASHERS ARE SHIPPED FROM THE FACTORY WIRED FOR SINGLE PHASE OPERATION UNLESS SPECIFIED AT THE TIME OF ORDER.

IF YOU ARE CONVERTING A SINGLE PHASE MACHINE TO THREE PHASE BE SURE TO FOLLOW THE BOOSTER WIRING INSTRUCTIONS ON PAGES 71-72.

Refer to the connection diagrams below to connect main incoming power to the dishwasher.

THREE PHASE POWER CONNECTION
Models UH330B

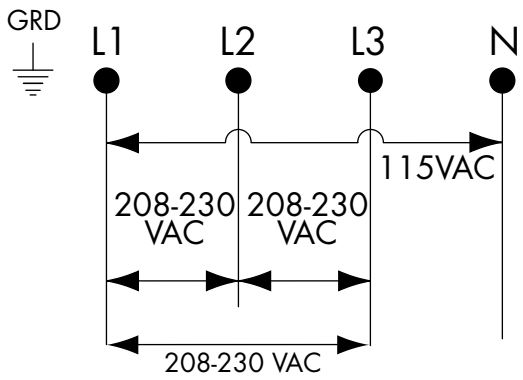

! VERY IMPORTANT !

THE ELECTRICAL POWER MUST BE A 4-WIRE PLUS GROUND SUPPLY WHICH INCLUDES A CURRENT CARRYING NEUTRAL.

HOW TO CONNECT 3 PHASE POWER

1. Check the data plate on the front of the dishwasher for the phase of the machine.

If the data plate says the machine is 3 Phase, then connect a 3 PH power supply.

2. Remove the lower access panel.
3. Pull power connection box forward and out.
4. The Main Terminal Block has terminals for L1, L2, L3, Neutral and Ground.
5. Connect ground, then connect L1, L2, L3 to 208-230VAC.
6. Connect a current carrying neutral to N.
7. Main power connections are complete.

SINGLE PHASE POWER CONNECTION
Models UH330B

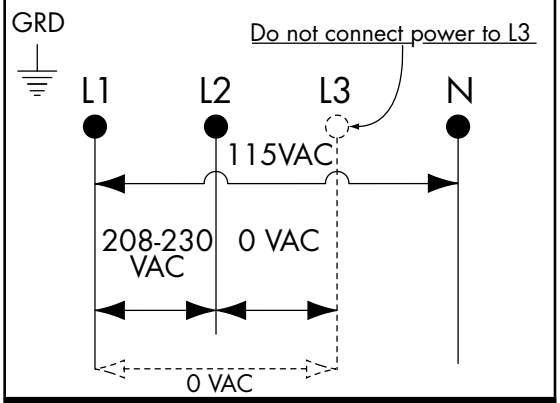

! VERY IMPORTANT !

THE ELECTRICAL POWER MUST BE A 3-WIRE PLUS GROUND SUPPLY WHICH INCLUDES A CURRENT CARRYING NEUTRAL.

HOW TO CONNECT 1 PHASE POWER

1. Check the data plate on the front of the dishwasher for the phase of the machine.

If the data plate says the machine is 1 Phase, then connect a 1 PH power supply.

2. Remove the lower access panel.
3. Pull power connection box forward and out.
4. The Main Terminal Block has connections for L1, L2, L3, Neutral and Ground.
5. Connect ground, then connect L1, L2 to 208-230VAC.
6. Connect a current carrying neutral to N.

DO NOT CONNECT POWER TO L3.

7. Main Power connections are complete.

Connecting Incoming Power to the Main Terminal Block for 1PH and 3PH Machines with Boosters - UH330B

WARNING:
Electrocution or serious injury may result when working on an energized circuit.

Disconnect power at the main breaker or service disconnect switch before working on the circuit.

Lock-out and tag the breaker or service disconnect switch to indicate that work is being performed on the circuit.

! VERY IMPORTANT !
PROVIDE A 3 FEET/1 METER SERVICE LOOP IN THE POWER SUPPLY CABLE TO SERVICE THE DISHWASHER.

! SINGLE PHASE POWER REQUIREMENT !

SINGLE PHASE UH330B
The electrical power must be a 3-wire plus ground supply which includes a current carrying neutral.

! THREE PHASE POWER REQUIREMENT !

THREE PHASE UH330B
The electrical power must be a 4-wire plus ground supply which includes a current carrying neutral.

Connecting Incoming Power to the Main Terminal Block for 1PH and 3PH Machines with Boosters - UH330B

Refer to the photo below:

1. Remove the lower front dishwasher panel.

2. Remove the retaining fasteners (A) from the swing-out brackets and swing the chemical pump bracket (B) and the chemical circuit board bracket (C) out of the way as shown.

3. Remove the screw holding the main terminal block cover and set the cover aside.

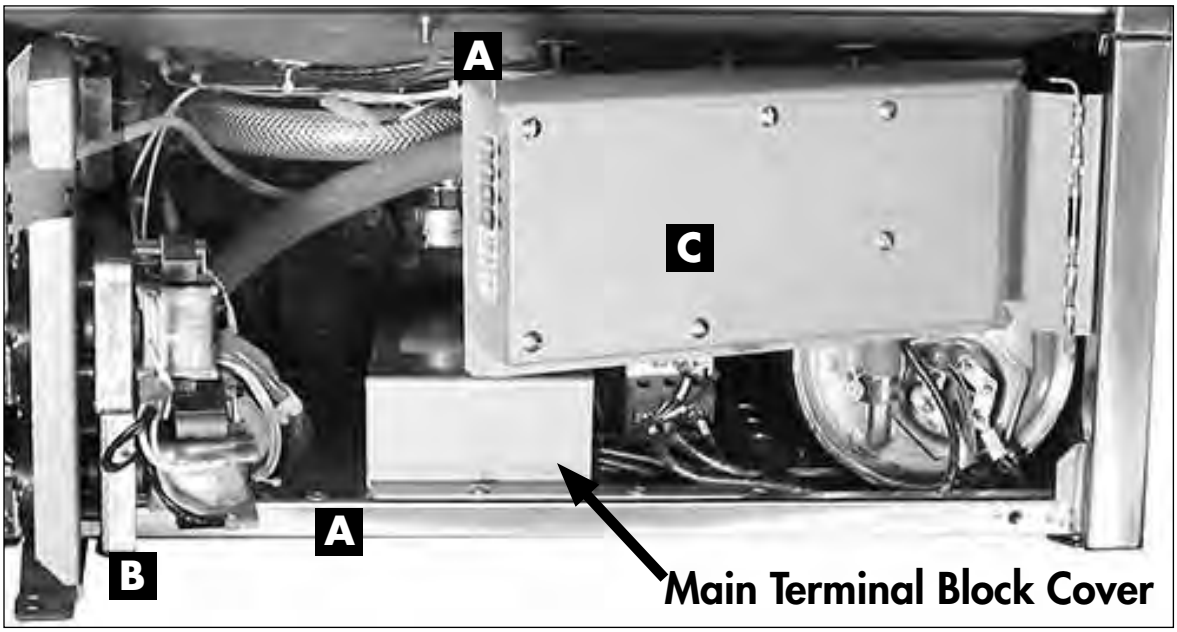

(continued on next page)

UH330B - Connecting Incoming Power to the Main Terminal Block for 1PH and 3PH

Refer to the photo below:

4. Provide a 3 foot/1 meter service loop in the power supply cable to service the machine
5. Route the power cable from the rear of the machine to the terminal block making sure the cable does not touch the booster heater.
6. Connect the power cable to the terminal block bracket using a suitable strain relief connector.
7. Connect the power wires according to the wiring diagrams on page 67 for either single phase or three phase operation.
8. Return the main terminal block bracket to its original position making sure the power cable does not touch the booster tank. Install the retaining screws.
9. Swing the chemical pump bracket and the chemical board back into position and secure with the existing fasteners.

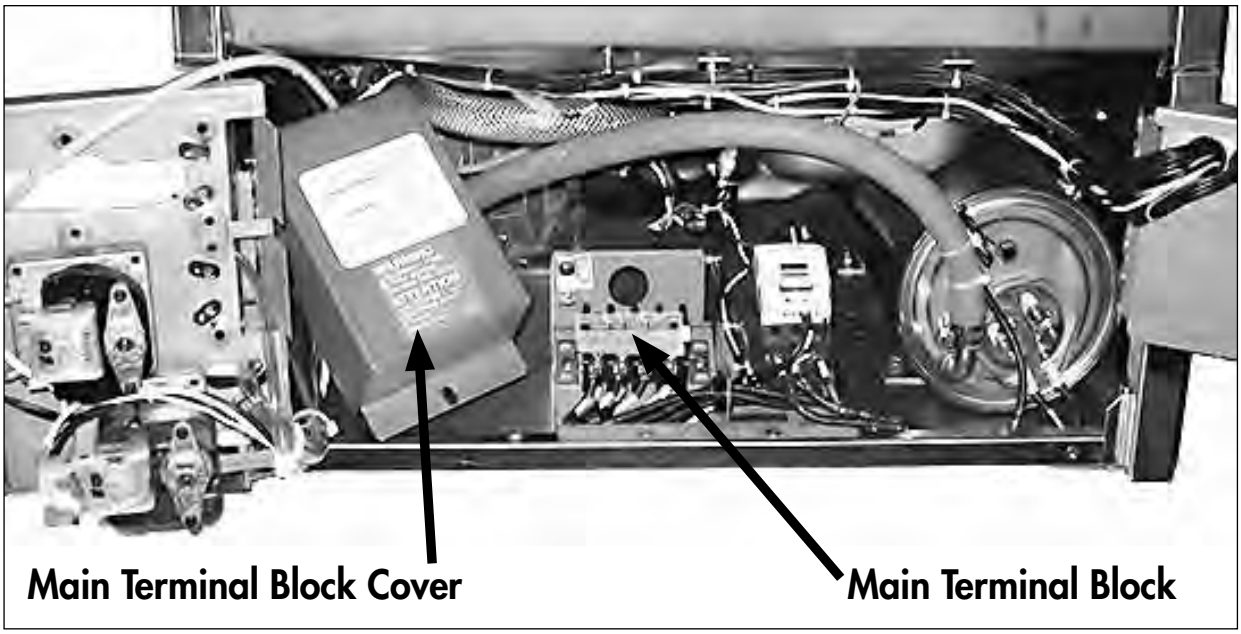

Booster Heater Conversion from 1PH to 3PH Operation

! VERY IMPORTANT !
THE BOOSTER HEATER IS WIRED FOR 1PH OPERATION WHEN SHIPPED. FOLLOW THE INSTRUCTIONS BELOW TO WIRE THE BOOSTER FOR 3PH.

WARNING:
Electrocution or serious injury may result when working on an energized circuit.

Disconnect power at the main breaker or service disconnect switch before working on the circuit.

Lock-out and tag the breaker or service disconnect switch to indicate that work is being performed on the circuit.

1. To convert the booster heater from single phase to three phase opeation, locate the booster wire labeled 1H3 cable-tied to the booster hose.
2. Remove the shrink insulation from the terminal and connect to the booster heater element as shown in the wiring diagram on page 72.

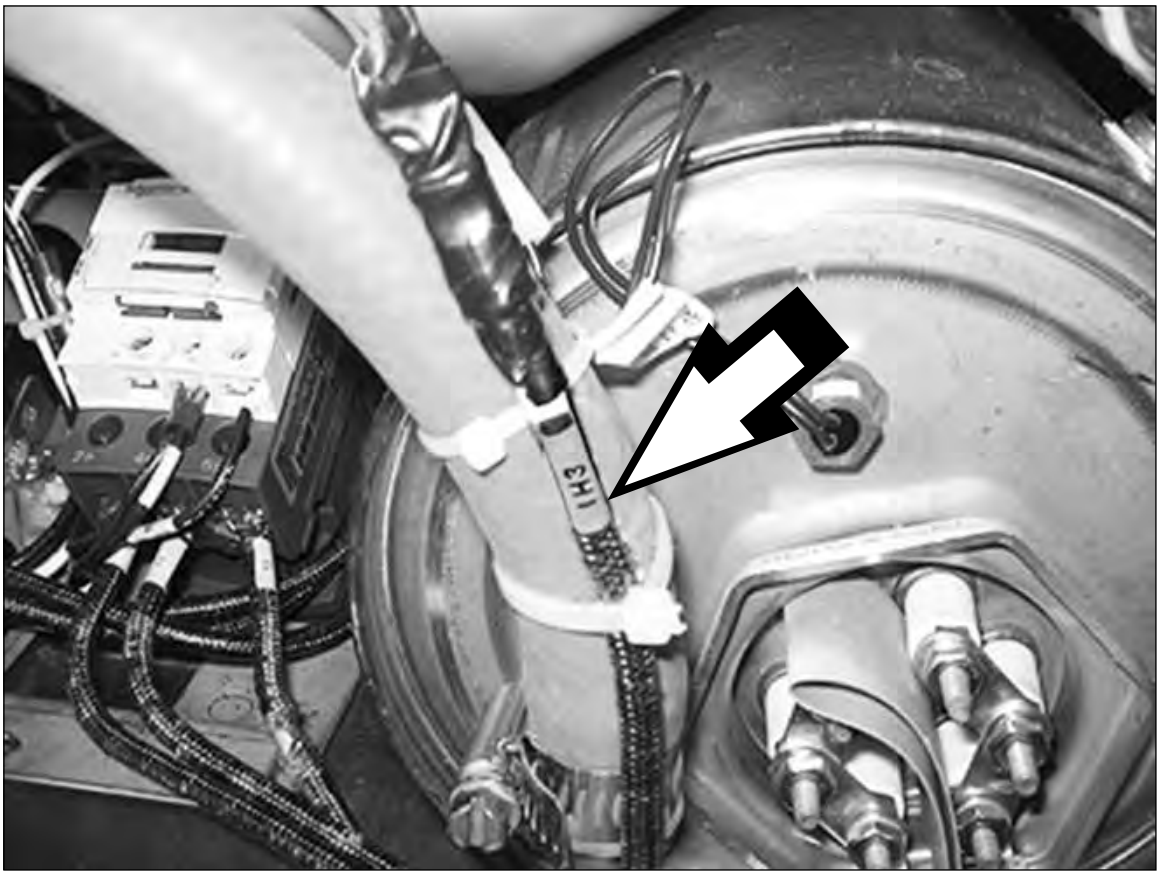

The three phase booster wire (1H3) is cable-tied to the hose adjacent to the booster tank.

Booster Heater Conversion from 1PH to 3PH Operation *(continued)*

! VERY IMPORTANT !
THE BOOSTER HEATER IS WIRED FOR 1PH OPERATION WHEN SHIPPED.
FOLLOW THE INSTRUCTIONS BELOW TO WIRE THE BOOSTER FOR 3PH.

3. Disconnect the existing booster heater wires and change the booster heater element jumpers as shown in the illustration below
4. Connect wires 1H1, 1H2, and 1H3 as shown below.

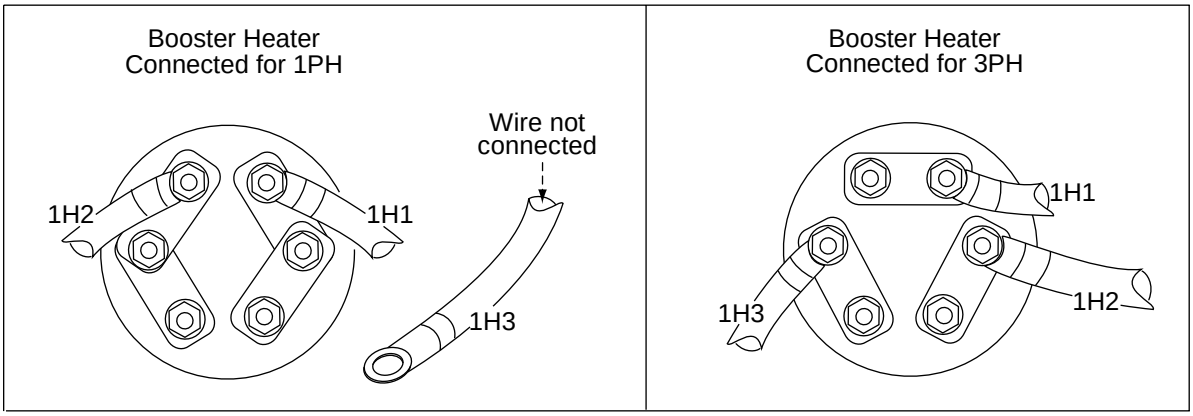

Wiring Diagram - Booster heater element connections shown for 1 phase and 3 phase operation.

5. A replacement 3PH data plate is stowed on the back of the lower front access panel.
6. Replace the existing 1PH data plate on the front of the panel with the new 3PH data plate. Discard the 1PH data plate.
7. Refer to the instructions on the next page to connect the main incoming power to the machine.

Completing the 1PH to 3PH Electrical Conversion

! ATTENTION !

CHANGE THE DATA PLATE ON THE LOWER FRONT PANEL OF THE MACHINE

AFTER THE MACHINE IS WIRED FOR 3PH AND THE BOOSTER HEATER IS CONNECTED FOR 3PH.

1. The data plate on the dishwasher lower front panel must be changed after the machine is converted from single phase operation to three phase operation.

2. Locate the replacement data plate stowed on the back of the lower front panel.

3. Remove the paper backing from the label and carefully place it over the existing data plate label making sure it covers the label completely.

4 Re-install the lower front panel to complete the conversion.

A three phase data plate is located on the back of the lower front panel.

Water Connection - UH330B

NOTE
Plumbing connections must comply with national, provincial local plumbing and sanitary codes.

! ATTENTION!
THE MODEL UH330B REQUIRES A SINGLE 1/2" INCOMING COLD WATER SUPPLY LINE

Model UH330B

1. Equipped with a 6 ft. flexible cold water fill hose with a 3/4" female garden hose connector.

2. A 1/2" or larger main incoming supply line must be installed to the dishwasher.

3. We recommend that a 1/2" or larger shut-off valve be installed in the main water supply, as close to the dishwasher as possible for servicing.

4. The UH330B has a built-in flow control. The flowing incoming cold water supply pressure must be between 25-95 psi.

5. A water hardness of 3 grains/gal (US) [51.3 mg/L] or less is recommended.

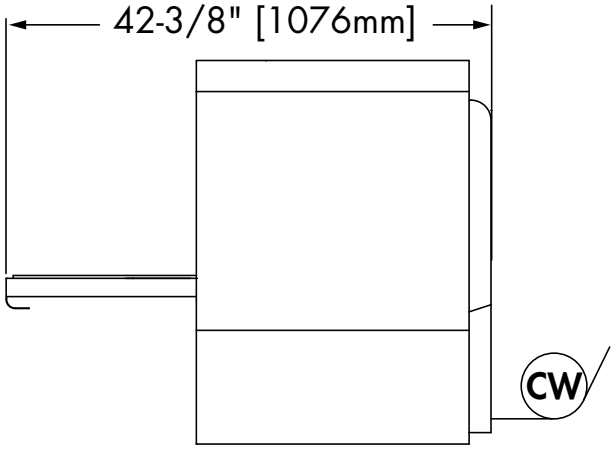

Side View

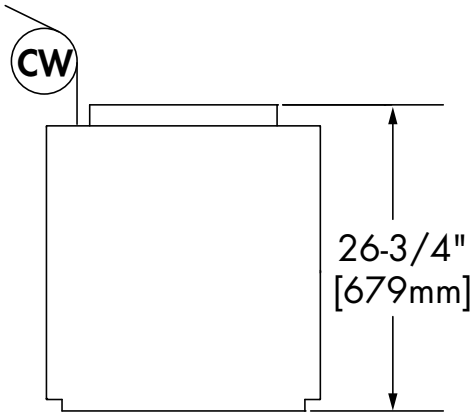

Plan View

CW = 1/2" Cold Water Supply
55-80°F/12-26°C

Drain Connection - UH330B

! VERY IMPORTANT !
IMPROPER INSTALLATION OF MACHINE DRAIN HOSE.
Machine drain problems are often the result of improper installation and may not be covered by the limited warranty.

! VERY IMPORTANT !
Do not connect the drain hose to a disposer. The dishwasher will not drain correctly.

! IMPORTANT !
Make sure that the flexible water supply and drain hoses are not kinked.

1. The UH330B is a pumped drain and is equipped with a 6 ft.. 5/8" I.D. drain hose. The maximum drain height connection must not exceed 3 ft.[1 m].

2. The drain hose is located at the rear of the dishwasher, and is secured to the rear of the machine provide an anti-siphoning loop in the drain hose.

3. A 3/4" hose barb fitting is strapped to the drain hose prior to shipment. The service part number for the hose barb is P/N 0512321.

4. Additional plumbing parts must be supplied by the plumbing installer.

5. The maximum drain flow is 15 US gpm/12.4 imp gpm/60 lpm.

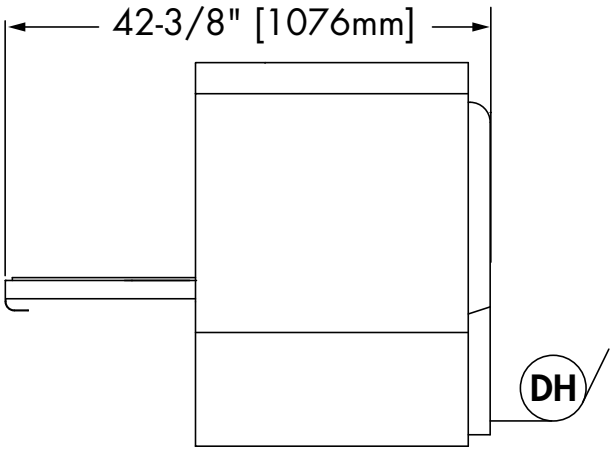

Side View

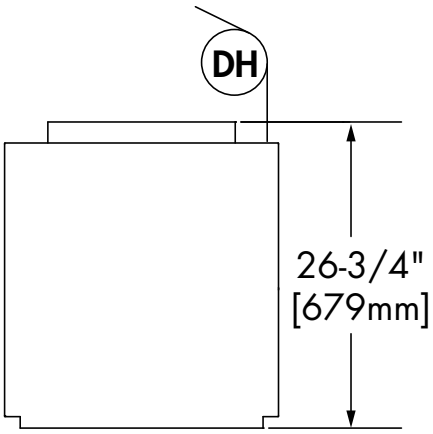

Plan View

DH = Drain Hose
5/8" I.D., 6 ft [1829 mm] Long

Drain Connection - Model UH330B (continued) -

NOTE
Plumbing connections must comply with national, provincial local plumbing and sanitary codes.

DO NOT CONNECT THE DRAIN HOSE TO A DISPOSER.
DO NOT REDUCE THE SIZE OF THE DRAIN HOSE CONNECTION.
DO NOT ADD ADDITIONAL LENGTH TO THE DRAIN HOSE.
DO NOT ALLOW THE DRAIN HOSE TO KINK.

For a Direct Drain Connection:

1. Install the drain hose to an 1-1/2" or larger "WYE" vented drain fitting.
2. CONNECTION TO A "TEE" FITTING WILL PREVENT THE DISHWASHER FROM DRAINING COMPLETELY.

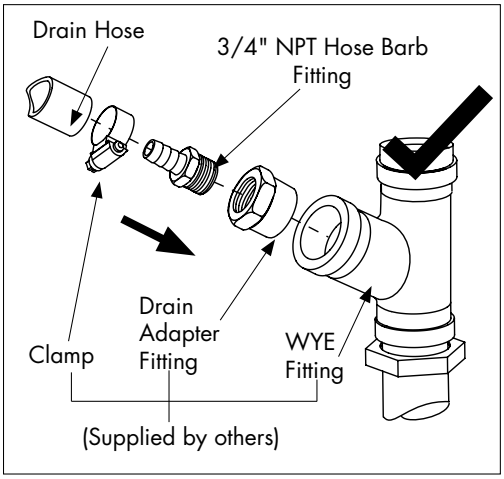

DO
connect the dishwasher flexible drain hose to a WYE drain fitting.

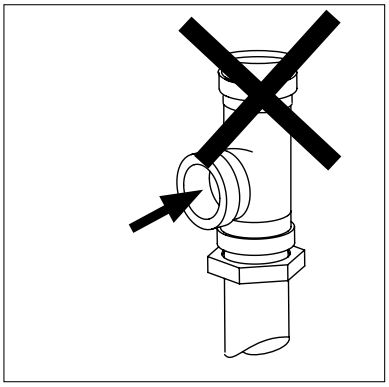

DO NOT
connect the dishwasher flexible drain hose to a TEE drain fitting.

For an Indirect Drain Connection:

1. A 1" [25.4mm] minimum air gap must be provided between the outlet of the dishwasher drain hose outlet and the flood-level rim of the floor drain, floor sink or any other locally approved drain receptacle. (See illustration below.)

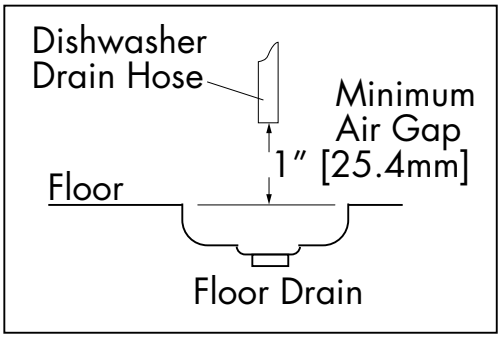

Chemical Connections - Model UH330B

! VERY IMPORTANT !
ALWAYS USE A COMMERCIAL-GRADE NON-CHLORINATED DETERGENT.
PLACE THE CHEMICAL SUPPLY CONTAINERS AS CLOSE TO THE MACHINE AS POSSIBLE.
DO NOT ELEVATE THE CHEMICAL CONTAINERS ABOVE THE FINISHED FLOOR.

! VERY IMPORTANT !
Contact a chemical supplier for detergent and rinse-aid chemicals. The chemical supplier must adjust the chemical dispensing pumps for water hardness and food soil types.

Chemical Dispensing Pumps

1. The detergent and rinse-aid pumps are located on the lower left-side of the machine behind the lower-front access panel.
2. Each pump is equipped with 6 feet [1.8 m] of pick-up tubes consisting of supply tubing, stiffener tubes, and strainers.
3. The pick-up tubes are stowed on the back of the machine for shipping.
4. A red label marked DETERGENT and a blue label marked RINSE-AID identify the chemical lines.
5. **The chemical squeeze tubes should be inspected and replaced every six months.**

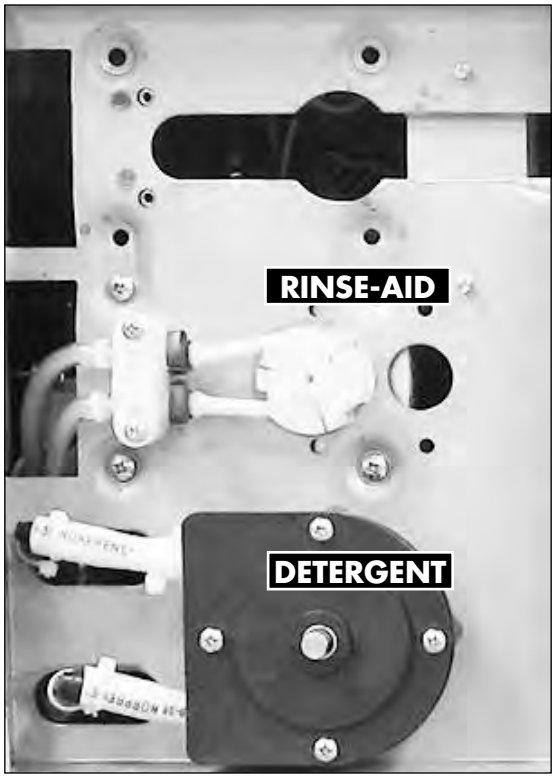

The chemical dispensing pumps are located on the left-side behind the lower front panel of the dishwasher.

The chemical dispensing pick-up tubes are stowed on the back of the dishwasher.

Chemical Connections - Model UH330B *(continued)*

! VERY IMPORTANT !
ALWAYS USE A COMMERCIAL-GRADE NON-CHLORINATED DETERGENT.
PLACE THE CHEMICAL SUPPLY CONTAINERS AS CLOSE TO THE MACHINE AS POSSIBLE.
DO NOT ELEVATE THE CHEMICAL CONTAINERS ABOVE THE FINISHED FLOOR.

Chemical Injection Points

1. The detergent enters the wash tank compartment through a fitting at the right rear of the wash compartment.

2. Rinse-aid enters the final rinse through a fitting in the front of the booster tank.

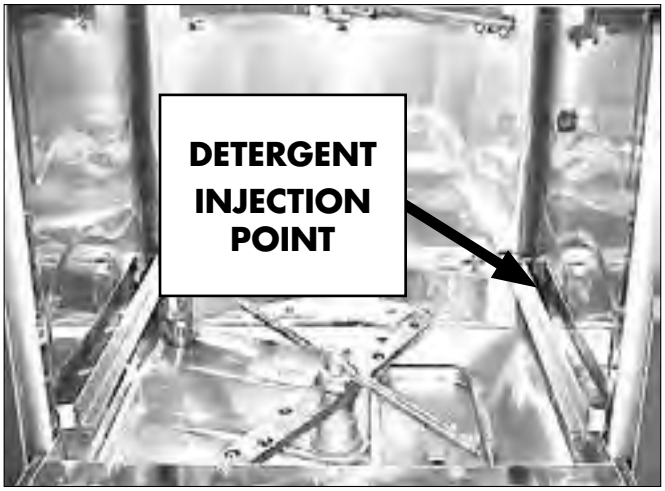

Chemical Connections - Model UH330B

Priming the Dispensing Pumps

! VERY IMPORTANT !

The chemical dispensing pumps must be primed before operating the dishwasher and whenever the chemical container is changed.

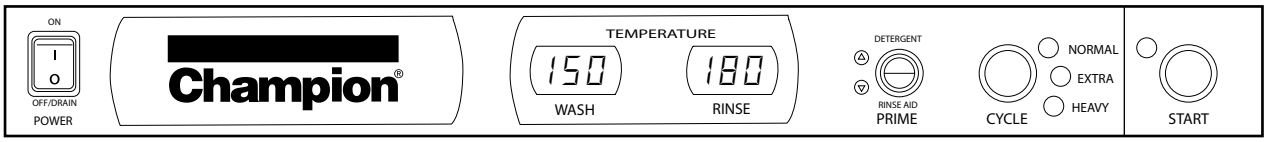

UH330B Control Panel

1. The chemical dispensing pump supply lines must be primed before they will pump the chemicals properly.

2. Make sure the chemical containers are full and the correct pick-up tubes are in their containers.

3. Turn the dishwasher power switch ON. The switch will illuminate and the dishwasher will fill with water.

4. Open the dishwasher door, then push and hold the prime push button UP to the DETERGENT position until detergent is observed entering the wash tank compartment. Release the push button.

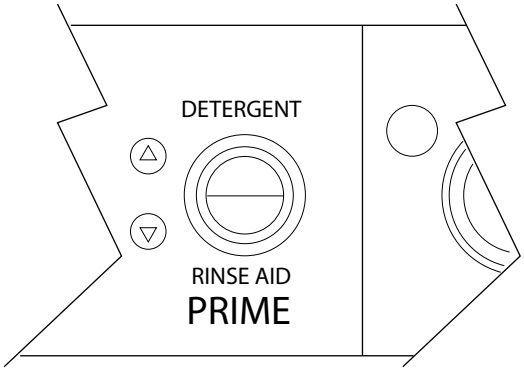

5. Push and hold the prime push button DOWN to the Rinse-aid position until you see air bubbles moving through the rinse-aid tubing, then continue to hold the prime push button for approximately 1 minute and then release.

6. Close the door to complete the priming operation.

(continued on next page)

Detergent and Rinse-aid Dispensing Pump Adjustments - Model UH330B

Chemical Dispensing Pump Adjustments

! ATTENTION !
The amount of dispensed chemical is determined by the run time of the dispensing time.

Refer to the photo below:

1. The chemical dispensing pump run adjustment screws are located on the end of the chemical circuit board swing-out bracket.

2. It is not necessary to swing the bracket out to make adjustments, but if desired, remove the mounting nut (A) and swing the bracket (B) out and to the right.

3. Refer to the next page for adjustment instructions.

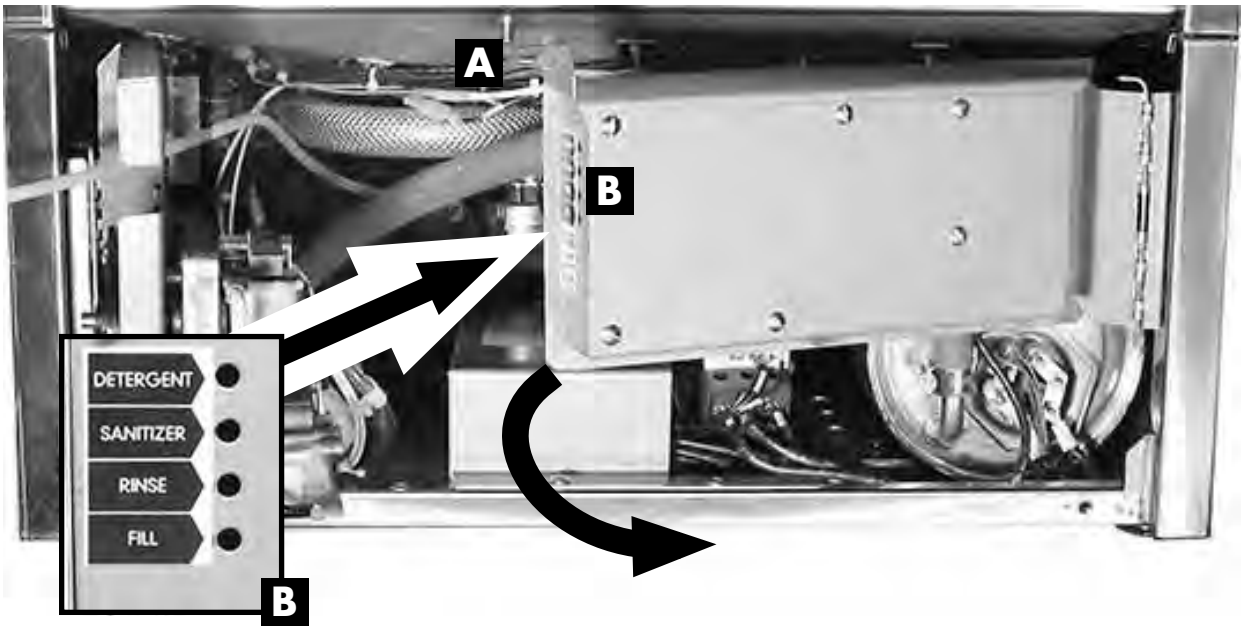

! VERY IMPORTANT !
Contact a chemical supplier for detergent and rinse-aid chemicals. The chemical supplier must adjust the chemical dispensing pumps for water hardness and food soil types.

Detergent and Rinse-aid Dispensing Pump Adjustments - Model UH330B

Chemical Dispensing Pump Adjustments *(continued)*

! ATTENTION !
THE FILL AND SANITIZER ADJUSTMENT SCREWS ARE NOT USED ON THE UH330B MACHINE.

Refer to the photo below:

To adjust the amount of chemicals dispensed by the pumps:

1. Make sure the chemical containers are full and the pick-up tubes are in their proper containers.

3. Turn the dishwasher power switch ON. The switch will illuminate and the dishwasher will fill with water.

4. Run a normal dishwasher cycle and test detergent and rinse-aid concentrations according to the chemical supplier's instructions.

CAUTION:
Excessive pressure to the potentiometers when adjusting can result in bent or broken adjusting screws.

5. Each dispensing pump has a clearly marked adjustment screw. Turn the screw CW to increase the run time of the dispensing pump and CCW to reduce the run time.

Operation - Model UH330B

Loading Dish Racks

! VERY IMPORTANT !
DO NOT OVERLOAD THE DISH RACK.
LOAD ONE DISH RACK INTO THE MACHINE AT A TIME.

1. Prescrap and rinse the wares before loading to remove large food particles.
2. Load soiled wares into the dish rack. Place plates and glasses in a peg rack. Place cups and bowls in a flat bottom rack. Place utensils in a single layer in a flat-bottom rack. Place pots and pans in a flat-bottom rack.

   Do not overload the dish rack. Wash one dish rack at a time.

3. Slide one dish rack into the wash compartment making sure that wares do not interfere with the rotating spray arms. Do not wash more than one dish rack at a time.

Prescrap and rinse wares before loading into the machine.

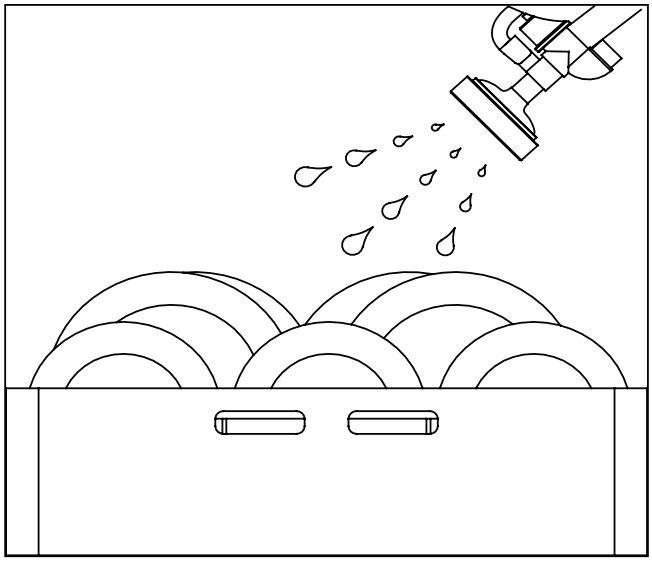

Load plates and glasses in a peg rack.

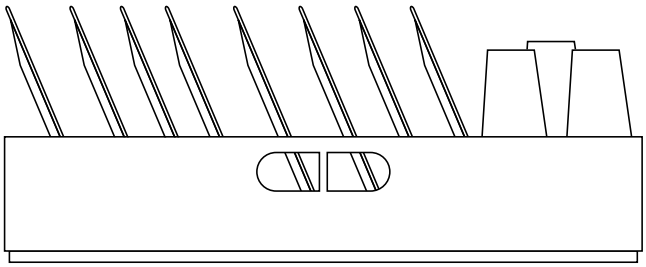

Loading Dish Racks *(continued)*

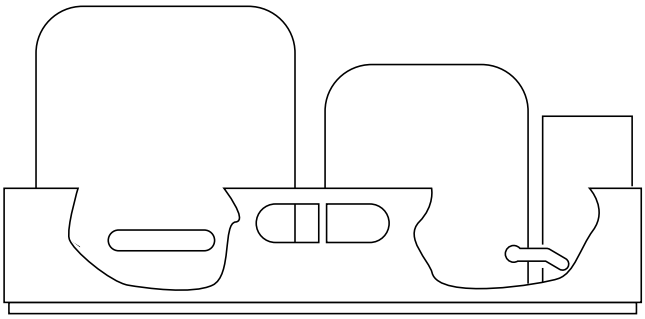

Load pots and pans in a flat-bottom rack.

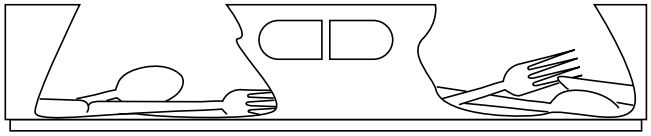

Load utensils in a single layer in a flat-bottom rack.

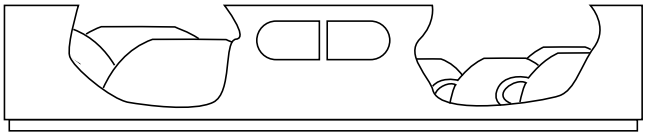

Load cups and bowls in a flat-bottom rack.

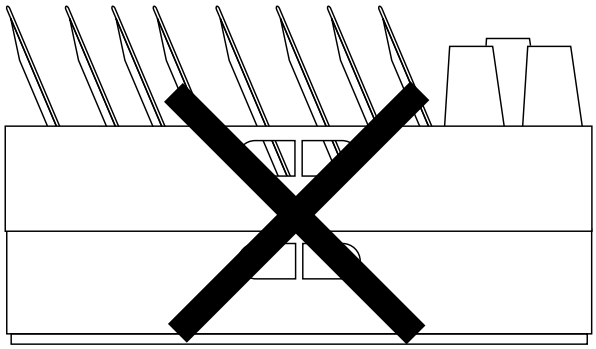

<u>NEVER</u> stack dish racks.
Wash one dish rack at a time.

UH330B Control Panel

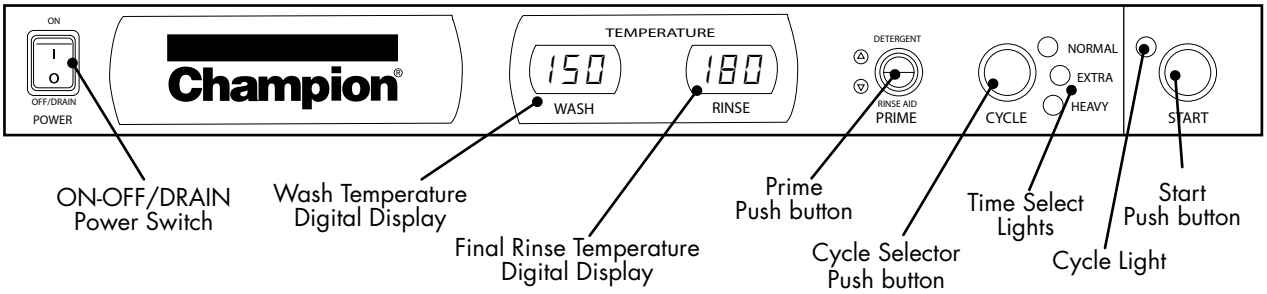

M4.2 Fill Sequence

To fill the dishwasher:

1. Close the door and push the Power Switch to the ON position.
2. The cycle light will begin flashing to indicate the machine has started the Filling and Heating cycle.
3. This cycle consists of multiple stages and will last approximately 15 to 20 minutes.
4. When the cycle light stops flashing the machine is ready to use.

! ATTENTION !
DOOR LEFT OPEN DURING WASH CYCLE
If the dishwasher door is left open for more than 5 seconds during the wash mode the dishwasher cycle will reset to the beginning of the selected wash cycle.

Wash Mode

1. Wait until the wash temperature gauge indicates a minimum of 150°F/66°C.
2. Scrap the wares to remove large food particles.

Load the dish rack into the machine and select a cycle time.

- NORMAL is the default setting and is approximately 2-1/2 minutes long.

- EXTRA CYCLE is selected by pushing the cycle button once. The EXTRA green indicator light flashes for 15 seconds. Pressing the START button before the flashing EXTRA indicator stops will start a 3-1/2 minute cycle as the EXTRA light illluminates.

HEAVY CYCLE. Push the cycle button twice. The HEAVY green light flashes for 15 seconds. Pressing the START button before the flashing HEAVY indicator stops will start a 4-1/2 minute cycle as the HEAVY light illuminates.

Wash Mode *(continued)*

3. Opening the door during a cycle will stop the dishwasher. The cycle resumes if the door is closed within 5 seconds. The cycle restarts from the beginning if the door is open for more than 5 seconds.

4. The final rinse cycle begins at the end of the wash cycle. Check the rinse temperature gauge during the final rinse. It must indicate a minimum of 180-195°F/82-91°C. The final rinse water is retained for the next wash cycle.

5. When the green cycle light goes out, open the door and remove the rack of clean wares.

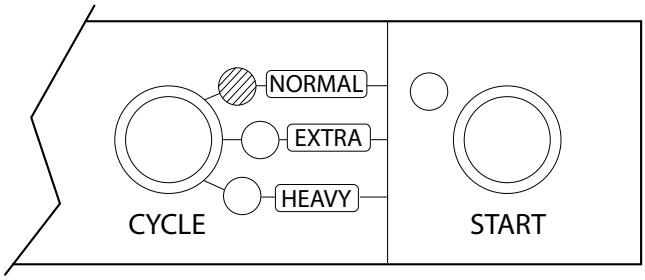

Push the Cycle button once for Extra Cycle.
Push twice for Heavy Cycle.
Push the Cycle button three times to cancel the selection and return to Normal Cycle.

Rinse Sentry Mode

! ATTENTION !
RINSE SENTRY MODE WILL EXTEND WASH CYCLE TIME

In the event that the final rinse temperature inside the booster tank has not reached 180-195°F/82-91°C after the wash cycle, the rinse sentry will extend the wash cycle time until the booster reaches 180-195°F/82-91°C. If the proper temperature is not reached within 5 minutes, the machine will leave the rinse sentry mode and complete the cycle.

Operation - Model UH330B

! VERY IMPORTANT !
Draining Problems Related To Improper Installation.
Problems with machine draining are often the result of improper installation.
NEVER EXTEND OR ADD LENGTH TO THE DRAIN HOSE.

Drain Mode

The dishwasher will enter the drain mode whenever the ON-OFF/DRAIN power switch is pushed down to the OFF/DRAIN position. The switch is located on the left side of the control panel.

IF THE ON-OFF/DRAIN SWITCH IS PLACED IN THE OFF/DRAIN POSITION FOR MORE THAN 3 SECONDS, THE DISHWASHER WILL CONTINUE TO DRAIN EVEN IF THE SWITCH IS PUSHED BACK TO THE ON POSITION.

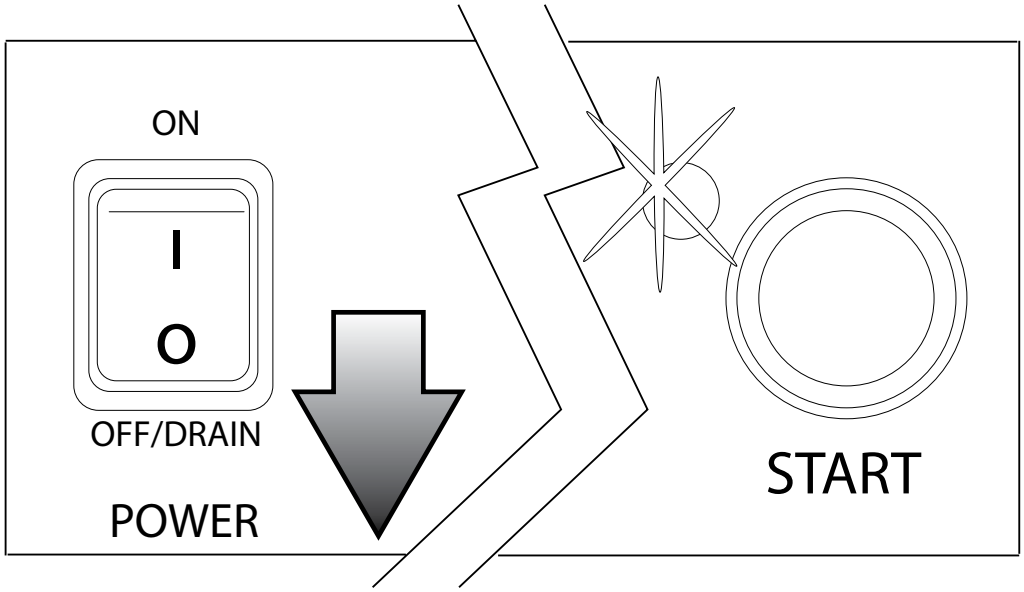

1. Remove any dish rack that may be inside the machine.

2. Push the illuminated power switch down to the OFF/DRAIN position.
   The power switch light will go out.

3. The cycle light will illuminate and the machine will drain.

4. The cycle light will go out indicating that the drain cycle is complete.
   DO NOT OPEN THE DOOR UNTIL THE LIGHT GOES OUT.

Cleaning - Model UH330B

! VERY IMPORTANT !
DRAIN AND CLEAN THE DISHWASHER EVERY 2 HOURS OF CONTINUOUS OPERATION, AFTER EACH MEAL PERIOD, AND AT THE END OF THE DAY.

! ATTENTION !
DO NOT USE STEEL WOOL SCRUB PADS TO CLEAN THE MACHINE.
DO NOT SPRAY THE EXTERIOR OF THE MACHINE WITH WATER.

To clean your machine:

1. Open the door and remove any dish rack inside the machine.
2. Drain the machine according to the instructions on the previous page.
3. Refer to the photo below. Remove the upper and lower wash and rinse arms.
4. Clean the overflow guard by hand with it installed in the machine.

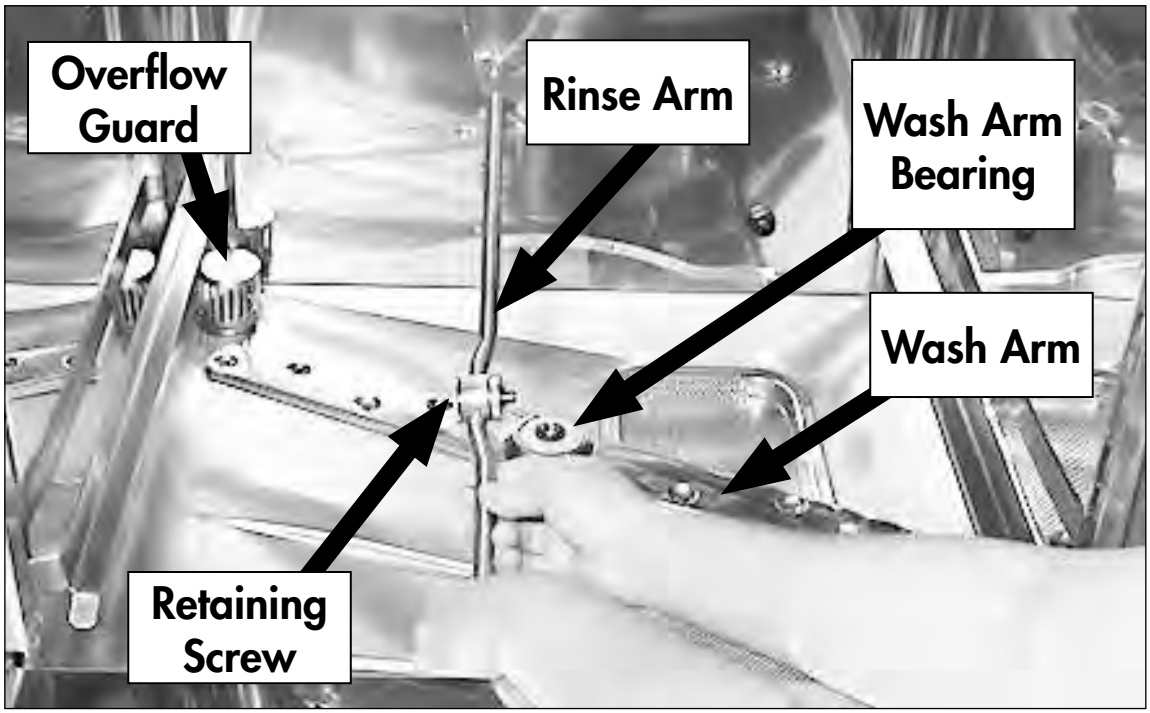

(continued on next page)

Cleaning - Model UH330B

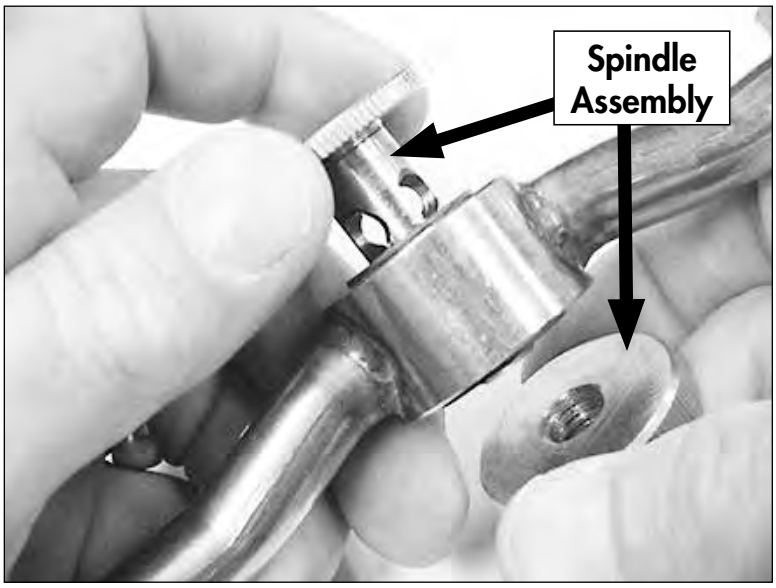

Rinse Arms

1. There are two rinse arms. They are interchangeable.
2. Remove the spindle assembly and end plugs in each pipe and flush the rinse pipes.
3. Inspect the rinse arm bearings for wear and replace as necessary.
4. Clean the rinse arm nozzles with a small paper clip.
5. Reassemble the rinse arm assemblies.

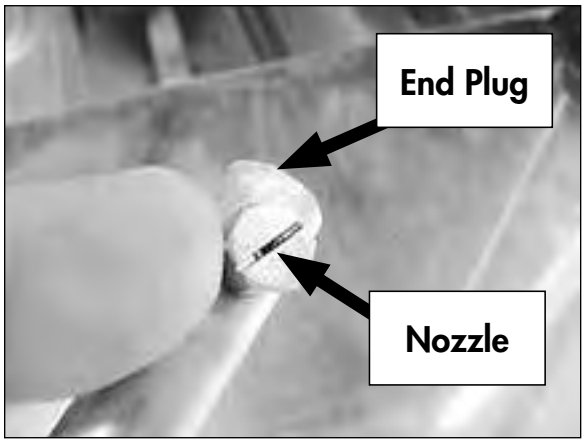

Wash Arms

1. There are two interchangeable wash arms.
2. Flush the wash arms thoroughly in a sink.
3. Inspect the wash arm bearings for wear and replace as necessary.

Model UH330B - Cleaning

Scrap Screen and Sump Strainer

1. Lift the scrap screen straight up and out of the machine to prevent debris from falling into the tank sump.

2. Flush the scrap screen in a remote sink making sure to back-flush both sides of the screen.

3. Wipe the tank sump of water and debris.

4. Carefully inspect the sump strainer. This strainer is not removeable but must be thoroughly cleaned before reinstalling the scrap screen.

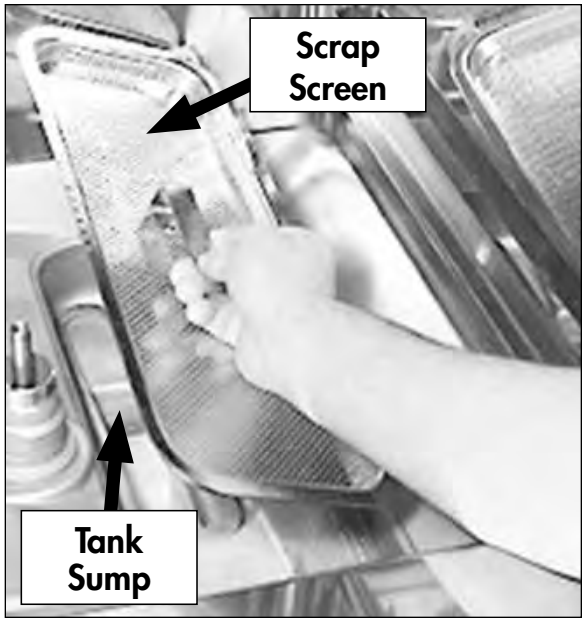

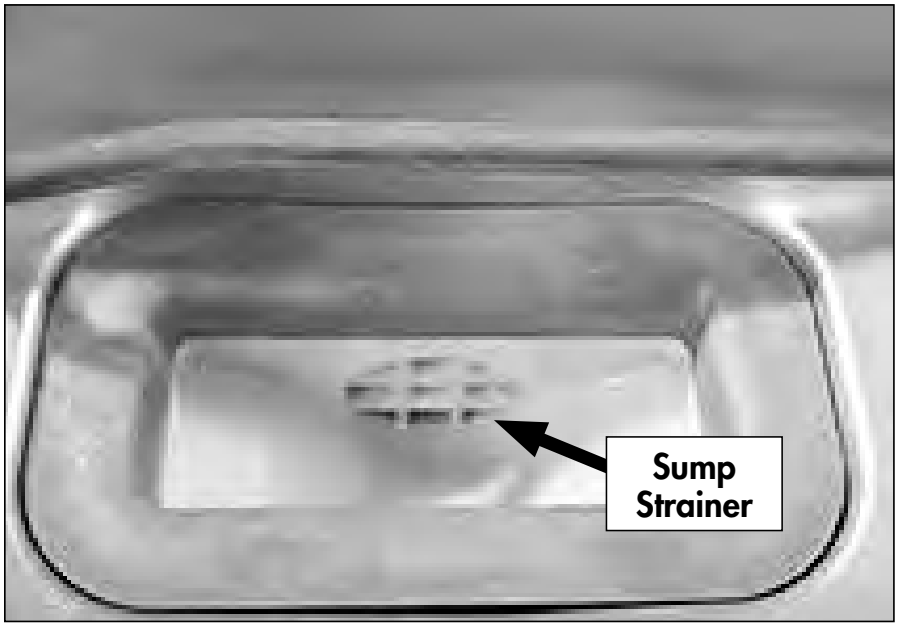

! ATTENTION !

A CLOGGED OR RESTRICTED SUMP STRAINER WILL PREVENT THE PROPER WASHING, RINSING AND DRAINING OF THE MACHINE.

! ATTENTION !

WIPE THE EXTERIOR OF THE MACHINE WITH A SOFT CLOTH AND MILD DETERGENT. DO NOT SPRAY THE EXTERIOR WITH WATER.

LEAVE THE DOOR OPEN TO AID IN OVERNIGHT DRYING.

Deliming Cautions and Warnings

A deliming agent must be used in accordance with your chemical supplier's instructions.

DANGER:
Death or serious injury may result when deliming solution is mixed with sodium hypochlorite sanitizing agent. Mixing may cause hazardous gases to form. Deliming solution and other acids must never be mixed with chlorine, iodine, bromine, or fluorine.

CAUTION:
Skin contact with deliming solutions can cause severe irritation and possible chemical burns. Always wear eye protection, rubber gloves and protective clothing when handling chemicals.

Follow the procedures below to de-lime the UH330B dishwasher.

1. Open the dishwasher door and remove any dish racks.
2. Turn the power switch on the dishwasher to the ON position.
3. Remove the detergent and rinse-aid chemical supply tubing from their chemical supply containers.
4. Place the tubing in a container of hot water.
5. Press and hold the prime switch UP in the DETERGENT position to flush the detergent from the supply tubing. Release the switch.
6. Press and hold the prime switch DOWN in the RINSE AID position to flush the rinse-aid from the supply tubing. Release the switch.
7. Turn the dishwasher power switch to OFF/DRAIN to drain the wash tank. The green cycle light will go out in about 2 minutes.
8. **Always wear eye protection, rubber gloves and protective clothing when handling chemicals.** Open the door and carefully add the deliming chemical to the wash tank in accordance with your chemical supplier's instructions. Be careful to avoid splashing.
9. Close the door and press the CYCLE push button three times. The green cycle indicator light will illuminate and the machine will run for 23 minutes.
10. Check the deliming results and if scale is still present repeat steps 8-9.
11. Turn the power switch ON to refill the dishwasher and to return the dishwasher to normal operation
12. Return chemical supply tubing to their containers and prime the chemical lines.

Model UH330B - Maintenance

Follow the maintenance schedules below to keep the dishwasher operating efficiently.

Daily Maintenance

1. Make sure the water supply is on and that the drain is not clogged.
2. Check the temperature displays to ensure they are operating.
3. Make sure the dish racks are in good condition.
4. Check the chemical containers and refill as required.
5. Follow the cleaning procedures provided in the *Cleaning Section*.

Weekly Maintenance

1. Perform Steps 1-5 in the Daily Maintenance.
2. Inspect water lines for leaks.
3. Check for water leaks underneath the dishwasher.
4. Make sure the flexible water fill and drain hoses are not kinked.
5. Make sure that the dishwasher is level.
6. Clean accumulated lime deposits from the wash tank heating element.
7. Inspect the scrap screen and replace it if damaged.
8. Check the spray arms and replace or repair if damaged.

Monthly Maintenance

1. Perform the Daily and Weekly Maintenance listed above.
2. Clean the chemical dispenser pick-up tubing.

To clean the pick-up tubing:

1. Remove the pick-up tubes from their containers.
2. Place each tube in a separate container of hot water.
3. Press and hold the PRIME buttons UP and DOWN until water flows into the wash tank compartment.
4. Return the pick-up tubes to their containers and prime the chemical lines.
5. Drain and refill the dishwasher.

NOTE:
There are no lubrication points on the dishwasher.

Troubleshooting - UH330B

Condition	Cause	Solution
Dishwasher will not run.	Door not closed. Main power OFF. Dishwasher OFF. Circuit board fuse blown.	Close door completely. Check breaker on panel. Turn dishwasher power switch ON. Contact service agent.
Low or no water.	Main water supply off. Fill hose kinked. Low incoming water pressure Solenoid valve defective. Solenoid strainer clogged.	Open supply valve. Straighten fill hose. Set flowing water pressure to 25-95 PSI. Install repair kit or replace. Clean strainer.
Chemicals won't feed into dishwasher.	Chemical supply low. Supply tubing damaged. Supply tubing kinked. Pick-up tube clogged Chemical circuit board fuse blown. Pump squeeze tube defective.	Refill chemical container. Replace tubing. Straighten tubing. Clean/replace tube. Contact service agent. Replace squeeze tube.
Low water pressure pumped from wash spray arms.	Clogged scrap screen. Clogged spray arms. Clogged pump intake.	Clean scrap screen. Clean spray arms. Inspect sump and clean pump intake.
Poor wash results.	Excessively hard water. Thermistor defective. (See chemicals won't feed above.) (See low or no water above.) Detergent injector defective. Chemical circuit board fuse blown. Wares incorrectly loaded. in dishrack. Booster high limit tripped. Wash tank high limit tripped. Rinse arm nozzles clogged.	Contact chemical supplier. Replace thermistor. (See chemicals won't feed above.) (See low or no water above.) Replace squeeze tube. Replace injector motor. Clean tubing and pick-up. Contact service agent. Reposition wares or reduce amount of wares in dish racks. Reset or replace high limit. Reset or replace high limit. Clean nozzles with small paper clip.
Water has drained out of the wash tank while the dishwasher was idle.	Anti-siphoning loop in drain hose has been removed. Drain hose was extended. Drain hose clamp is not holding the drain hose in proper position. Building plumbing does not provide correct air vent to prevent siphoning.	Re-route drain hose. DO NOT STRETCH HOSE Replace/adjust hose clamp making sure goose-neck is maintained. Contact service Agent and/or plumber.
Dishwasher stays in wash cycle.	Rinse Sentry extends wash mode for a maximum time of 5-minutes to allow final rinse water booster temperature to reach 180˚F/82˚C.	Contact service agent.

UH330B Timer Board Diagnostics

Follow the instructions below to quickly check the status of many machine components.

! ATTENTION !
Refer to pages 55-63 for additional troubleshooting information.

Timer Board Self-Diagnostic Test

! RED ON/OFF switch must be in "OFF" position. If not, switch to "OFF" and allow machine to drain (90 sec.) !

	PERFORM ACTION	REACTION OBSERVED	OPERATIONAL
1	With the Power Switch in the OFF/DRAIN position, press the START button 2 times.	drain valve opens and closes 5 times.	drain valve
2	open door	green cycle light blinks	door switch, cycle light
3	press and release START switch	green cycle light blinks	start button
4	close door and press start switch 3 times. Components on the right will run consecutively for a few seconds.	fill valve opens	fill valve
		detergent pump runs	detergent pump
		rinse-aid pump runs	rinse-aid pump
		drain valve opens	drain-valve
		drain valve closes	
		wash pump runs	wash pump
		drain pump / sanitizer runs	drain pump / sanitizer

If one or more components do not run, see below:

CONDITION	POSSIBLE CASUE / SOLUTION
• One of the components in step 3 does not run	▶ Check the component that did not run
• The wash pump is the only component that runs	▶ Check the 6 amp fuse on the timer board
• The wash pump is the only component that will not run and the 6 amp fuse is good	▶ Check the pump motor/ See troubleshooting guide
• None of the components run in step 3	▶ Check neutral wire/See troubleshooting guide

6A 250V FUSE

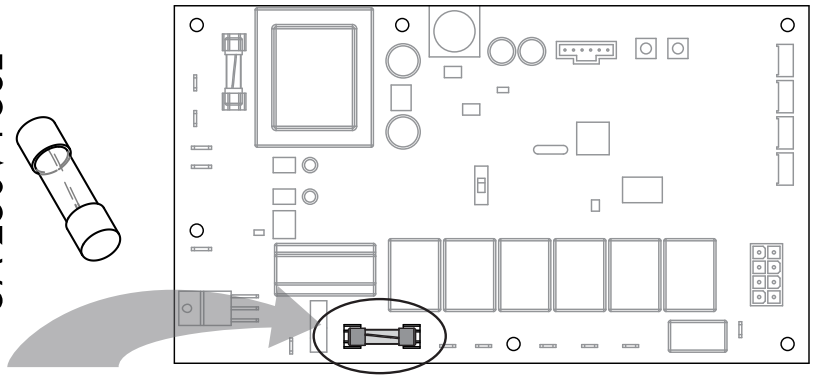

UH330B M4.2 Fill Sequence

The UH330B M4.2 has a unique fill sequence to ensure the wash and booster tank reach temperature as quickly as possible. The fill sequence is:

1. Turn the dishwasher power switch ON.
2. The cycle light begins to flash.
3. Machine control checks the water level in the booster tank via the pressure transducer.
   - If booster tank is full, it is drained via the rinse pump.
   - If booster tank is empty, the booster fills with water.
4. Booster tank heats its water.
5. Wash tank is completely drained
6. Water enters the wash tank from the booster tank via the rinse pump for a partial fill.
7. Booster refills with water.
8. Booster tank heats its water.
9. Water enters the wash tank from the booster tank via the rinse pump to complete the fill.
10. Booster refills with water.
11. The cycle light turns off.
12. Machine ready for operation.

Electrical Schematics and Timing Charts

Illustrations ***Page***

Electrical Schematic - Low Temperature Model - UL130 96

Electrical Schematic - High Temperature Models - UH130, UH130B, UH230, UH230B 97

Chemical Alarm Schematic - UH130, UH130B, UH230, UH230B, UH330, UH330B 98

Electrical Schematic - High Temperature Heat Recovery Model - UH330B.....99
UH330B Prior to S/N W170568116

Timing Charts - UH130, UH130B, UH230, UH230B, UL130 100

Timing Chart - UH330B 101

Electrical Schematic - High Temperature Heat Recovery Model - UH330B.....102
UH330B Beginning with S/N W170568116 and above

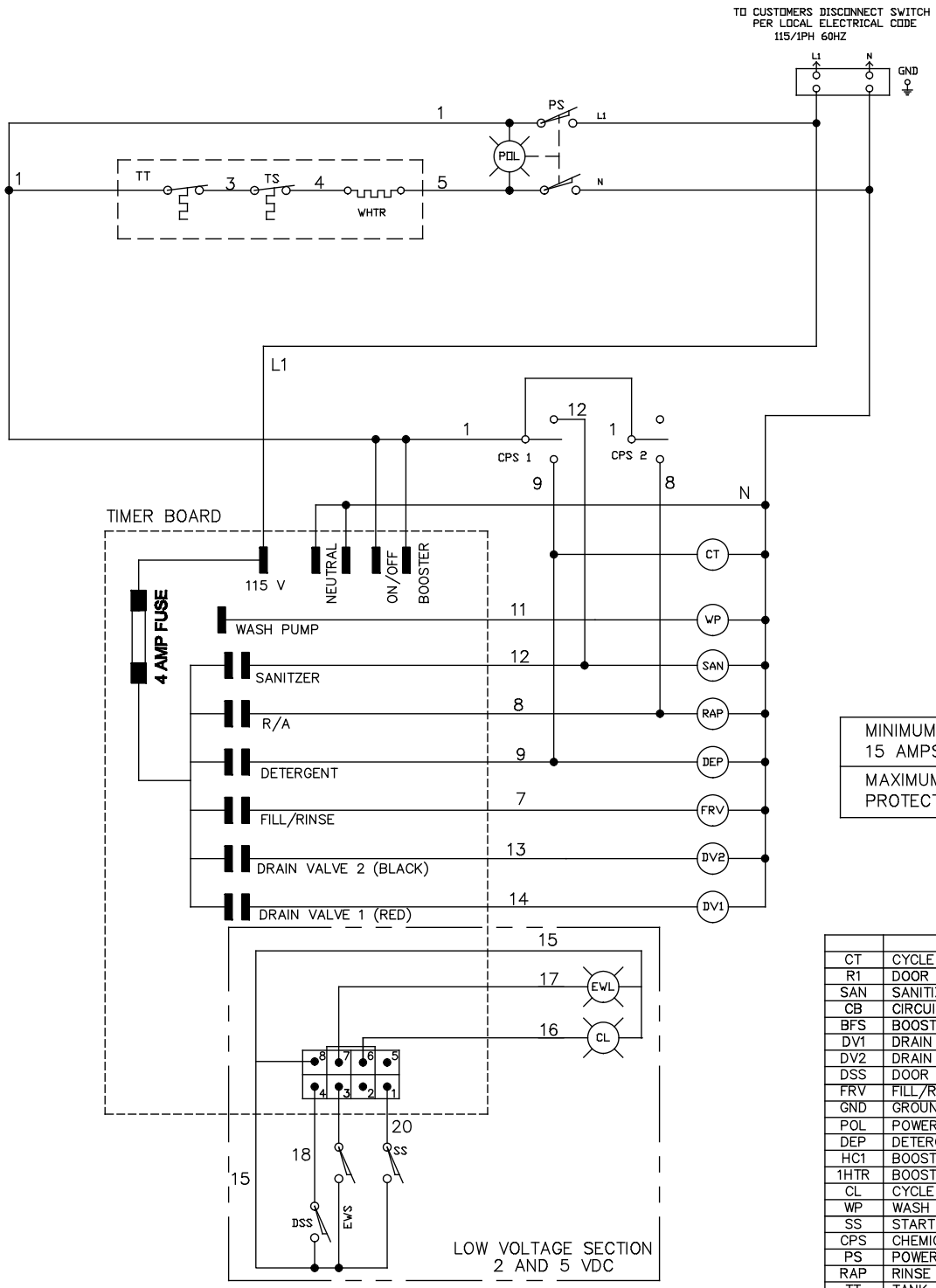

MINIMUM CIRCUIT AMPACITY 15 AMPS
MAXIMUM OVERCURRENT PROTECTION 15 AMPS

CT	CYCLE COUNTER
R1	DOOR SAFETY/HEATER RELAY
SAN	SANITIZER
CB	CIRCUIT BOARD
BFS	BOOSTER FILL SWITCH
DV1	DRAIN VALVE 1
DV2	DRAIN VALVE 2
DSS	DOOR SAFETY SWITCH
FRV	FILL/RINSE VALVE
GND	GROUND
POL	POWER ON LIGHT
DEP	DETERGENT PUMP
HC1	BOOSTER CONTACTOR
1HTR	BOOSTER HEATER
CL	CYCLE LIGHT
WP	WASH PUMP
SS	START SWITCH
CPS	CHEMICAL PRIME SWITCH
PS	POWER ON SWITCH
RAP	RINSE AID PUMP
TT	TANK HEAT THERMOSTAT
TS	TANK HEAT SAFETY THERMOSTAT
BT	BOOSTER THERMOSTAT
BS	BOOSTER SAFETY THERMOSTAT
EWS	EXTENDED/DELIME WASH SWITCH
SP	SANITIZER PUMP
WHTR	WASH TANK HEATER
EWL	EXTENDED WASH LIGHT

UL130
LOW TEMP UNDERCOUNTER

DIAGRAM STATE
END OF CYCLE
POWER-OFF
DOOR-OPENED

DATE	NUMBER/REV
20-MAR-14	0513372

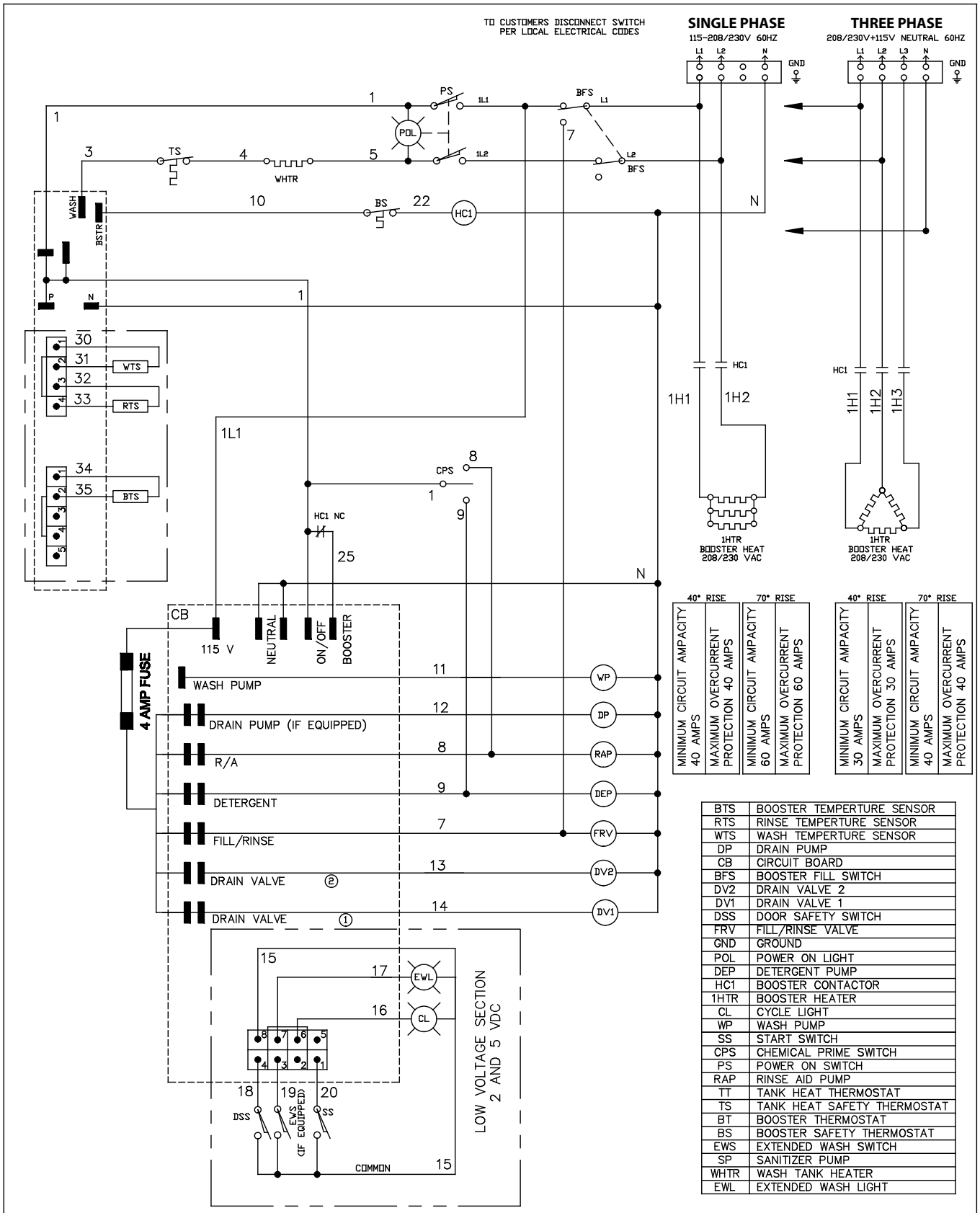

BTS	BOOSTER TEMPERTURE SENSOR
RTS	RINSE TEMPERTURE SENSOR
WTS	WASH TEMPERTURE SENSOR
DP	DRAIN PUMP
CB	CIRCUIT BOARD
BFS	BOOSTER FILL SWITCH
DV2	DRAIN VALVE 2
DV1	DRAIN VALVE 1
DSS	DOOR SAFETY SWITCH
FRV	FILL/RINSE VALVE
GND	GROUND
POL	POWER ON LIGHT
DEP	DETERGENT PUMP
HC1	BOOSTER CONTACTOR
1HTR	BOOSTER HEATER
CL	CYCLE LIGHT
WP	WASH PUMP
SS	START SWITCH
CPS	CHEMICAL PRIME SWITCH
PS	POWER ON SWITCH
RAP	RINSE AID PUMP
TT	TANK HEAT THERMOSTAT
TS	TANK HEAT SAFETY THERMOSTAT
BT	BOOSTER THERMOSTAT
BS	BOOSTER SAFETY THERMOSTAT
EWS	EXTENDED WASH SWITCH
SP	SANITIZER PUMP
WHTR	WASH TANK HEATER
EWL	EXTENDED WASH LIGHT

UH130, UH130B, UH230, UH230B
HIGH TEMP DIGITAL UNDERCOUNTER

DIAGRAM STATE
END OF CYCLE
POWER-OFF
DOOR-OPEN

DATE	NUMBER/REV
28-JAN-14	0513571

Chemical Alarm Schematic - UH130, UH130B, UH230, UH230B, UH330, UH330B

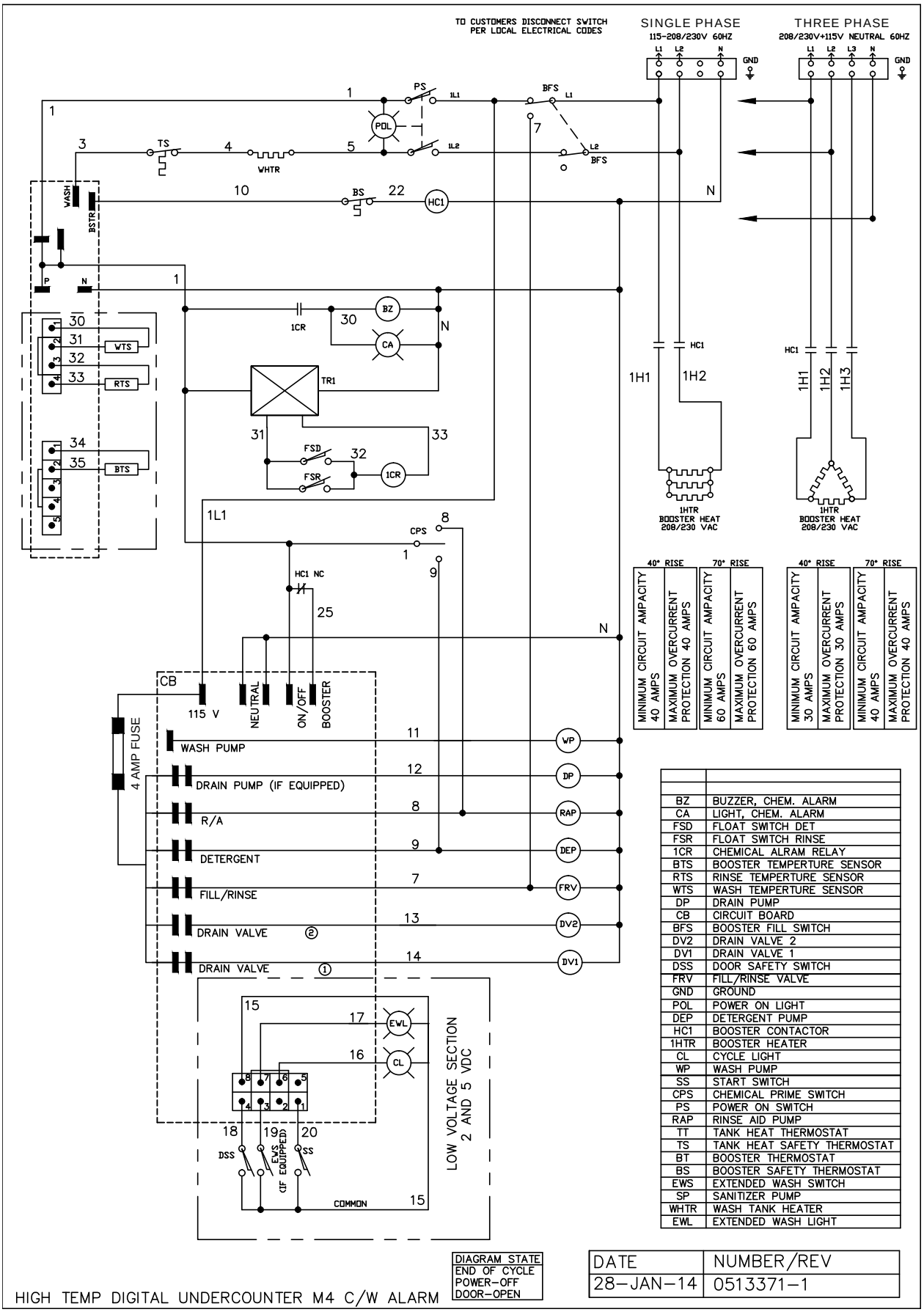

BZ	BUZZER, CHEM. ALARM
CA	LIGHT, CHEM. ALARM
FSD	FLOAT SWITCH DET
FSR	FLOAT SWITCH RINSE
1CR	CHEMICAL ALRAM RELAY
BTS	BOOSTER TEMPERTURE SENSOR
RTS	RINSE TEMPERTURE SENSOR
WTS	WASH TEMPERTURE SENSOR
DP	DRAIN PUMP
CB	CIRCUIT BOARD
BFS	BOOSTER FILL SWITCH
DV2	DRAIN VALVE 2
DV1	DRAIN VALVE 1
DSS	DOOR SAFETY SWITCH
FRV	FILL/RINSE VALVE
GND	GROUND
POL	POWER ON LIGHT
DEP	DETERGENT PUMP
HC1	BOOSTER CONTACTOR
1HTR	BOOSTER HEATER
CL	CYCLE LIGHT
WP	WASH PUMP
SS	START SWITCH
CPS	CHEMICAL PRIME SWITCH
PS	POWER ON SWITCH
RAP	RINSE AID PUMP
TT	TANK HEAT THERMOSTAT
TS	TANK HEAT SAFETY THERMOSTAT
BT	BOOSTER THERMOSTAT
BS	BOOSTER SAFETY THERMOSTAT
EWS	EXTENDED WASH SWITCH
SP	SANITIZER PUMP
WHTR	WASH TANK HEATER
EWL	EXTENDED WASH LIGHT

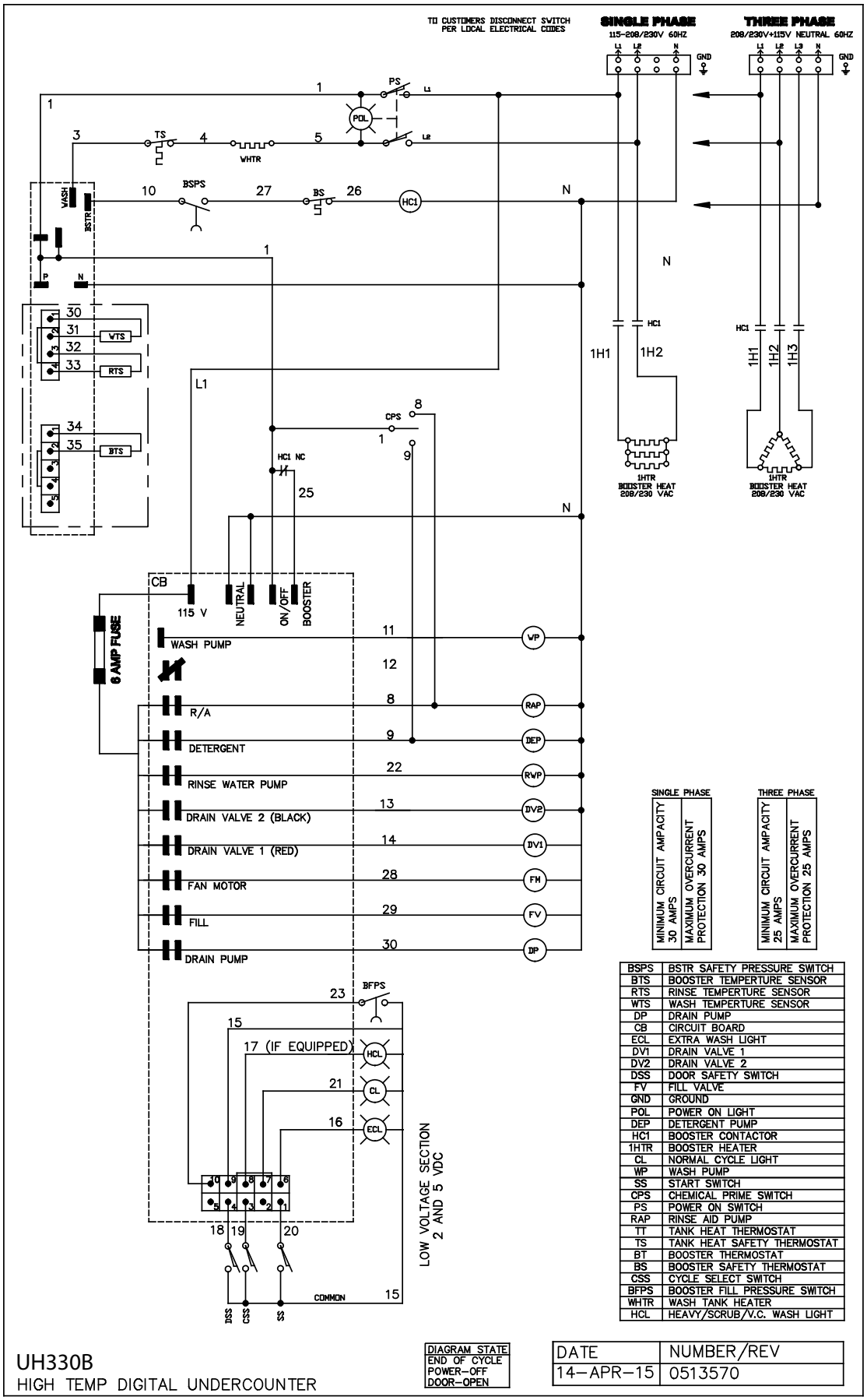

SINGLE PHASE	
MINIMUM CIRCUIT AMPACITY 30 AMPS	MAXIMUM OVERCURRENT PROTECTION 30 AMPS

THREE PHASE	
MINIMUM CIRCUIT AMPACITY 25 AMPS	MAXIMUM OVERCURRENT PROTECTION 25 AMPS

BSPS	BSTR SAFETY PRESSURE SWITCH
BTS	BOOSTER TEMPERTURE SENSOR
RTS	RINSE TEMPERTURE SENSOR
WTS	WASH TEMPERTURE SENSOR
DP	DRAIN PUMP
CB	CIRCUIT BOARD
ECL	EXTRA WASH LIGHT
DV1	DRAIN VALVE 1
DV2	DRAIN VALVE 2
DSS	DOOR SAFETY SWITCH
FV	FILL VALVE
GND	GROUND
POL	POWER ON LIGHT
DEP	DETERGENT PUMP
HC1	BOOSTER CONTACTOR
1HTR	BOOSTER HEATER
CL	NORMAL CYCLE LIGHT
WP	WASH PUMP
SS	START SWITCH
CPS	CHEMICAL PRIME SWITCH
PS	POWER ON SWITCH
RAP	RINSE AID PUMP
TT	TANK HEAT THERMOSTAT
TS	TANK HEAT SAFETY THERMOSTAT
BT	BOOSTER THERMOSTAT
BS	BOOSTER SAFETY THERMOSTAT
CSS	CYCLE SELECT SWITCH
BFPS	BOOSTER FILL PRESSURE SWITCH
WHTR	WASH TANK HEATER
HCL	HEAVY/SCRUB/V.C. WASH LIGHT

UH330B
HIGH TEMP DIGITAL UNDERCOUNTER

DIAGRAM STATE
END OF CYCLE
POWER-OFF
DOOR-OPEN

DATE	NUMBER/REV
14-APR-15	0513570

UH230, UH230B

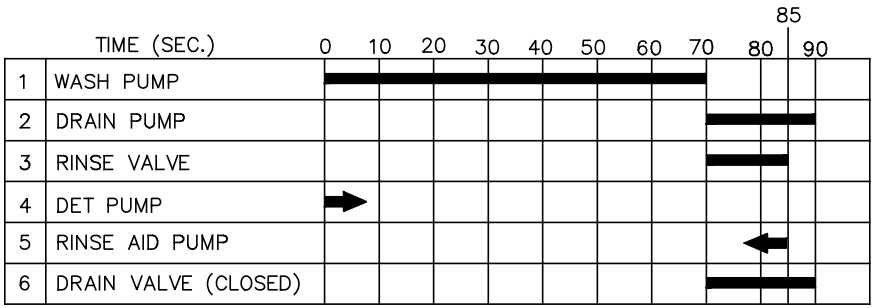

		MINIMUM	MAXIMUM
1	FILL VALVE	20 SEC.	55 SEC
2	DET. PUMP	0 SEC.	12 SEC.
3	SAN. PUMP	0 SEC.	20 SEC.
4	RINSE AID PUMP	0 SEC.	10 SEC.

ARROW INDICATES THAT FUNCTION END TIME
IS VARIABLE WITH THE ADJUSTMENT POTENTIOMETER

TIMING CHART FOR FRESH WATER RINSE

EXTENDED WASH ADDS 15 MINUTES EXTRA WASHING TIME AT 70 SECS
SWITCH MAY BE PUSHED ANY TIME FROM 0.5 TO 70 SEC

UH130, UH130B, UL130

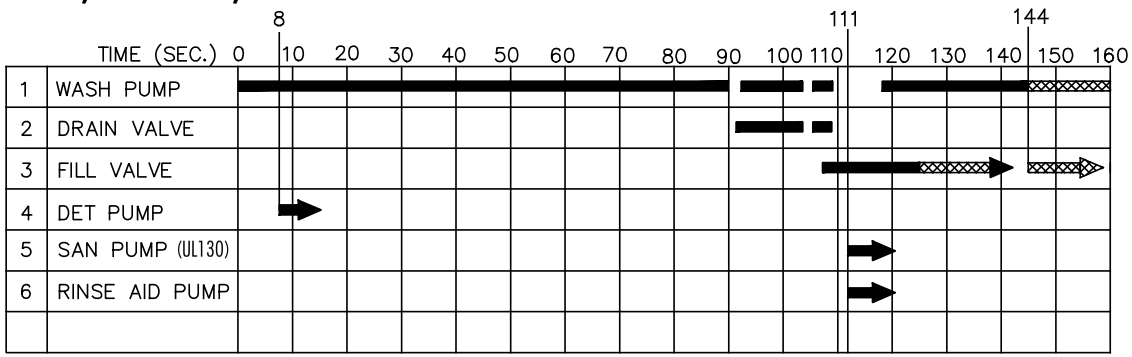

WASH PUMP

TIME	ON	OFF
P1	0	90
P2	92.5	103
P3	105.5	109
P4	118	144
P4	144	VARIES WITH F2

DRAIN VALVE

TIME	ON	OFF
D1	92	103
D2	105	108.5

FILL VALVE

TIME	ON	OFF
F1	106	123
F2	123	VARIABLE

TIMING CHART FOR FILL AND DUMP DENOTES ADJUSTABLE TIME

EXTENDED WASH ADDS 15 MINUTES EXTRA WASHING TIME AT 90 SECS
SWITCH MAY BE PUSHED ANY TIME FROM 0.5 TO 90 SEC

UH330B Timing Charts

TIMING CHART FOR FRESH WATER RINSE HEAT RECOVERY

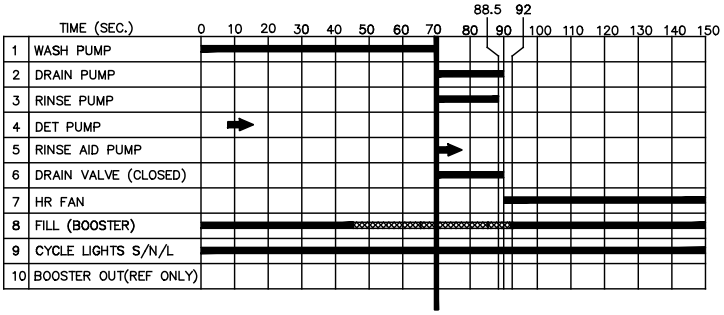

		MINIMUM	MAXIMUM
1	FILL VALVE	2 SEC.	60 SEC
2	DET. PUMP	0 SEC.	12 SEC.
4	RINSE AID PUMP	0 SEC.	5 SEC.

ARROW INDICATES THAT FUNCTION END TIME IS VARIABLE WITH THE ADJUSTMENT POTENTIOMETER

NORMAL– WASH=70 TOTAL CYCLE=150
MEDIUM – WASH=120 TOTAL CYCLE=200
LONG – WASH=196 TOTAL CYCLE=277

UH330B SETTING

1 3 SELECTABLE WASH TIMES 70/120/196
2 S/L CL FLASHES WHEN CYCLE IS SELECTED–TURNS SOLID WHEN CYCLE START IS PUSHED – CYCLE LIGHT STAYS ON UNTIL END OF CYCLE.
3 FILL MAY HAPPEN AS REQUIRED BY WATER LEVEL SENSOR ANY TIME WHEN MACHINE IS NOT IS CYCLE. DURING CYCLE FILL MAY NOT OCCUR DURING LOCKOUT PERIOD DENOTED BY

TIMING CHART FOR HEAT RECOVERY DRAIN CYCLE
ACTIVATED 4 SEC. AFTER "POWER" SWITCH IS TURNED OFF

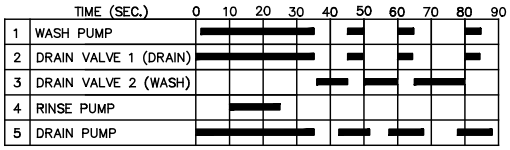

WASH PUMP

TIME	ON	OFF
PD1	1	35
PD2	46	51
PD3	61	66
PD4	81	86

DRAIN PUMP

TIME	ON	OFF
PD1	0	35
PD2	43	53
PD3	59	68
PD4	79	89

DRAIN VALVE 1

TIME	ON	OFF
DD1	0	34.5
DD2	45	50.5
DD3	60	65.5
DD3	80	85.5

DRAIN VALVE 2

TIME	ON	OFF
DD1	35	44.5
DD2	51	59.5
DD3	66	79.5
DD3		

RINSE PUMP

TIME	ON	OFF
FD1	10	25

TIMING CHART FOR HEAT RECOVERY FILL CYCLE

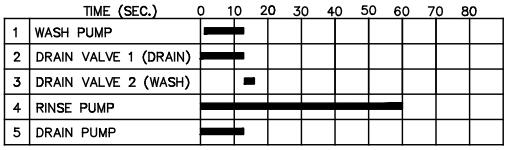

WASH PUMP

TIME	ON	OFF
PD1	1	12.5

RINSE PUMP

TIME	ON	OFF
FD1	0	60

DRAIN VALVE 1

TIME	ON	OFF
DD1	0	12.5
DD2		

DRAIN VALVE 2

TIME	ON	OFF
DD1	13	15
DD2		

RINSE PUMP

TIME	ON	OFF
FD1	0	60

Timing Chart for Heat Recovery Fill Cycle:

1) The heat recovery fill cycle is enabled as soon as the booster tank is full and has reached the required temperature.

2) The wash tank will fill with hot water from the booster tank.

3) The cycle light will flash during the fill cycle.

4) The machine may fill if the machine is not in cycle; however, the machine will not fill during the wash cycle lockout period as denoted by in the chart at the top of the page.

UH330B - Electrical Schematic Beginning with S/N W170568116

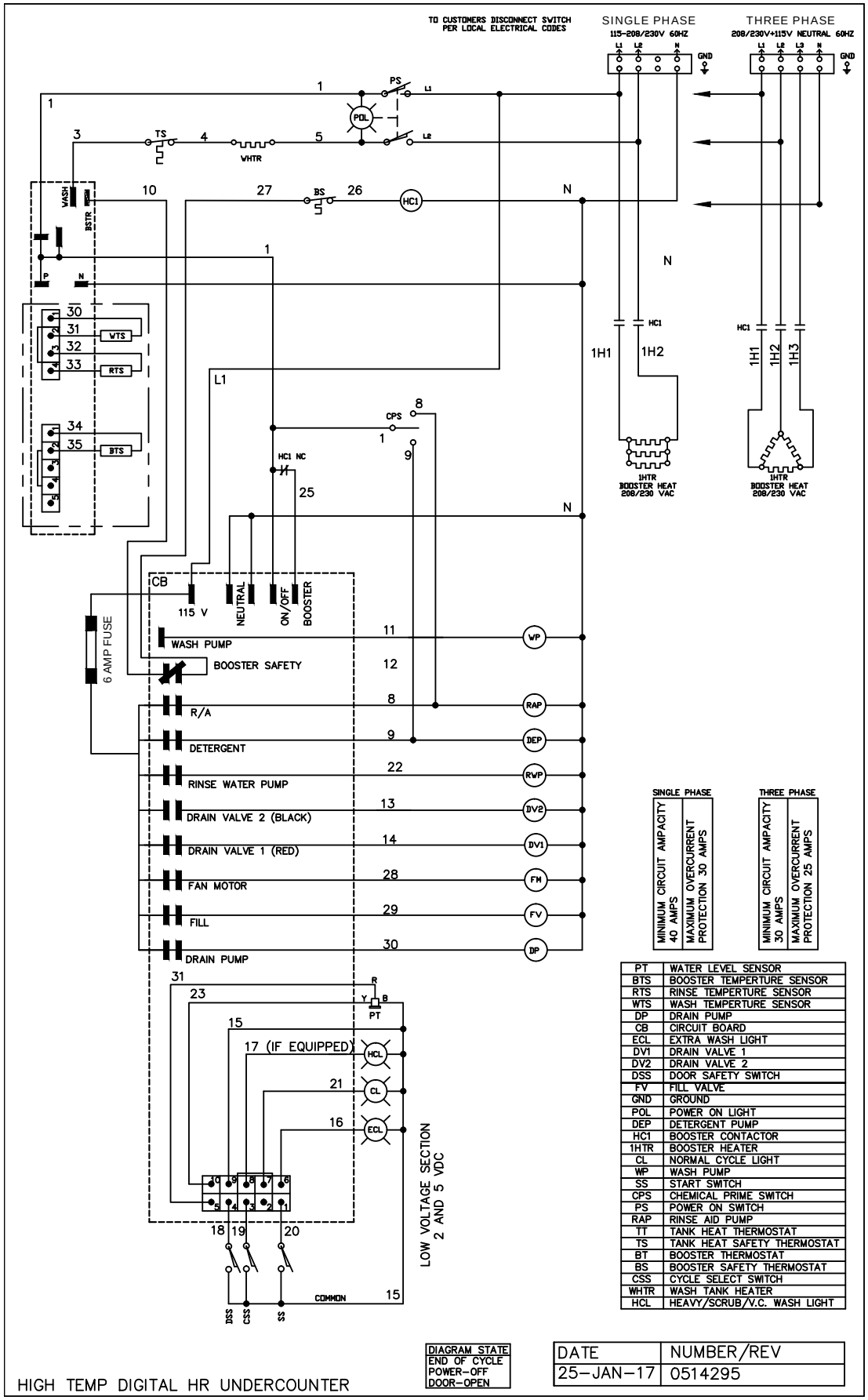

PT	WATER LEVEL SENSOR
BTS	BOOSTER TEMPERTURE SENSOR
RTS	RINSE TEMPERTURE SENSOR
WTS	WASH TEMPERTURE SENSOR
DP	DRAIN PUMP
CB	CIRCUIT BOARD
ECL	EXTRA WASH LIGHT
DV1	DRAIN VALVE 1
DV2	DRAIN VALVE 2
DSS	DOOR SAFETY SWITCH
FV	FILL VALVE
GND	GROUND
POL	POWER ON LIGHT
DEP	DETERGENT PUMP
HC1	BOOSTER CONTACTOR
1HTR	BOOSTER HEATER
CL	NORMAL CYCLE LIGHT
WP	WASH PUMP
SS	START SWITCH
CPS	CHEMICAL PRIME SWITCH
PS	POWER ON SWITCH
RAP	RINSE AID PUMP
TT	TANK HEAT THERMOSTAT
TS	TANK HEAT SAFETY THERMOSTAT
BT	BOOSTER THERMOSTAT
BS	BOOSTER SAFETY THERMOSTAT
CSS	CYCLE SELECT SWITCH
WHTR	WASH TANK HEATER
HCL	HEAVY/SCRUB/V.C. WASH LIGHT

Commercial Kitchen Equipment Parts

Find more Champion equipment resources at

parthubz.com/equipment/champion

Need parts or service?

Call 833-700-8006

support@parthubz.com

parthubz.com