Commercial Kitchen Equipment Parts

CLEVELAND 22CET3.1

Cleveland 22CET3.1 document

Provided by PartHubz

parthubz.com

833-700-8006 | support@parthubz.com

Visit www.clevelandrange.com to locate a service or sales representative in your area.

CLEVELAND

SteamChef

Electric Convection Steamers

Operation, Installation & Maintenance Manual

This manual is updated as new information and models are released. Visit our website for the latest manual.

MODELS:

22CET3.1
22CET6.1

For your future reference.

Model # _____

Serial # _____

Read the manual thoroughly.
Improper installation, operation or maintenance can cause property damage, injury or death.

WELBILT®

Part # - KE004035-2 C

STATEMENT OF RESPONSIBILITIES / DÉCLARATION DES RESPONSABILITÉS / DECLARACIÓN DE RESPONSABILIDADES

This document is for use by experienced and trained Qualified Cleveland Range, LLC Authorized Service Representatives who are familiar with both the safety procedures, and equipment they service. Cleveland Range, LLC assumes no liability for any death, injury, equipment damage, or property damage resulting from use of, improper use of, or failure to use the information contained in this document. Cleveland Range, LLC has made every effort to provide accurate information in this document, but cannot guarantee that this document does not contain unintentional errors and omissions.

The information in this document may be subject to technical and technological changes, revisions, or updates. Cleveland Range, LLC assumes no liability or responsibility regarding errata, changes, revisions, or updates.

Qualified Cleveland Range, LLC Authorized Service Representatives are obligated to follow industry standard safety procedures, including, but not limited to, OSHA regulations, and disconnect / lock out / tag out procedures for all utilities including steam, and disconnect / lock out / tag out procedures for gas, electric, and steam powered equipment and / or appliances.

All utilities (gas, electric, water and steam) should be turned OFF to the equipment and locked out of operation according to OSHA approved practices during any servicing of Cleveland Range equipment

Qualified Cleveland Range, LLC Authorized Service Representatives are obligated to maintain up-to-date knowledge, skills, materials and equipment.

Ce document est destiné à l'usage des Représentants de Service qualifiés et autorisés de Cleveland Range, LLC qui possèdent l'expérience et la formation ainsi que la bonne connaissance des mesures de sécurité et du matériel qu'ils entretiennent.

Cleveland Range, LLC décline toute responsabilité pour tout cas de décès, blessure, dommage matériel ou dommage aux biens résultant de l'utilisation, de la mauvaise utilisation ou du manquement d'utilisation des renseignements contenus dans ce document.

Cleveland Range, LLC s'est efforcé à fournir des renseignements précis dans ce document mais ne peut garantir que ce document soit exempt d'erreurs et d'omissions non intentionnelles.

Les renseignements contenus dans ce document peuvent être assujettis à des changements techniques et technologiques, des révisions ou des mises à jour.

Cleveland Range, LLC décline toute obligation ou responsabilité concernant les errata, modifications, révisions ou mises à jour.

Les Représentants de Service qualifiés et autorisés de Cleveland Range, LLC sont tenus de se conformer aux mesures de sécurité normalisées de l'industrie, y compris, mais sans s'y limiter, les réglementations de l'OSHA, les procédures de débranchement / verrouillage / étiquetage relatives à tous les services publics, dont l'approvisionnement en vapeur, et les procédures de débranchement / verrouillage / étiquetage relatives aux équipements et/ou appareils fonctionnant au gaz, à l'électricité et à la vapeur.

Au cours de tout entretien d'un appareil Cleveland Range, tous les services publics (gaz, électricité, eau et vapeur) doivent être FERMÉS au niveau de l'appareil et le dispositif de fonctionnement doit être verrouillé suivant les pratiques approuvées de l'OSHA.

Les Représentants de Service qualifiés et autorisés de Cleveland Range, LLC sont tenus d'actualiser en permanence leurs connaissances, compétences, matériel et équipement.

Este documento está destinado para el uso de los Representantes de Servicio calificados y autorizados de Cleveland Range, LLC quienes cuentan con la experiencia y la capacitación así como el buen conocimiento de las medidas de seguridad y de los equipos que mantienen.

Cleveland Range, LLC, declina toda responsabilidad en caso de cualquier fallecimiento, lesiones, daños al equipo o daños a la propiedad resultantes de la utilización, del uso indebido o de la falta de utilización de la información provista en este documento.

Cleveland Range, LLC se ha esforzado en suministrar información precisa en este documento, pero no puede garantizar que este documento esté exento de errores y de omisiones no intencionales.

La información contenida en este documento podría estar sujeta a cambios técnicos o tecnológicos, revisiones o actualizaciones. Cleveland Range, LLC declina toda obligación o responsabilidad con respecto a erratas, modificaciones, revisiones o actualizaciones.

Los Representantes de Servicio calificados y autorizados de Cleveland Range, LLC tienen la obligación de seguir los procedimientos estándar de seguridad de la industria; los cuales incluyen pero no se limitan a los reglamentos de la OSHA (La Administración de la Seguridad y Salud Ocupacionales), los procedimientos de desconexión, cierre y etiquetado relativos a todos los servicios públicos incluyendo el suministro de vapor y los procedimientos de desconexión, cierre y etiquetado para los equipos y/o aparatos que funcionan a base de gas, electricidad o vapor.

Cuando se esté dando servicio o mantenimiento a un aparato de Cleveland Range, todos los servicios públicos (gas, electricidad, agua y vapor) deben estar APAGADOS para el equipo en cuestión y se debe seguir el procedimiento de cierre de operaciones de acuerdo con las prácticas aprobadas por la OSHA.

Los Representantes de Servicio calificados y autorizados de Cleveland Range, LLC tienen la obligación de actualizar constantemente sus conocimientos, destrezas, materiales y equipamiento.

FOR YOUR SAFETY / POUR VOTRE SÉCURITÉ / PARA SU SEGURIDAD

FOR YOUR SAFETY

Do not store or use gasoline or any other flammable liquids and vapours in the vicinity of this or any other appliance.

WARNING: Improper installation, operation, adjustment, alteration, service or maintenance can cause property damage, injury or death. Read the installation and operating instructions thoroughly before installing, operating or servicing this equipment.

Do not spray aerosols in the vicinity of this appliance while it is in operation.

This appliance is not to be used by persons with reduced physical, sensory or mental capabilities, or lack of experience and knowledge, unless they have been given supervision or instruction concerning use of the appliance by a person responsible for their safety.

This appliance is not for use by children and they must be supervised not to play with it.

Retain this manual for your reference.

The boiler base Tabletop is NOT a supporting surface. Death, Injury or Equipment Damage will result from mounting or placing anything on the Tabletop.

When the ON/OFF lever is turned to the OFF position, Steamer will remain HOT for some time. Avoid contact with hot surfaces and steam.

Death, Injury or Equipment Damage can result from touching any component inside this appliance when the power is connected.

POUR VOTRE SÉCURITÉ

Ne pas entreposer ou utiliser d'essence ou d'autres liquides ou vapeurs inflammables à proximité de cet appareil ou de tout autre appareil.

AVERTISSEMENT : Toute mauvaise pratique en matière d'installation, de fonctionnement, de réglage, de modification, d'entretien ou de maintenance peut causer des dommages matériels, des blessures ou la mort. Lisez la totalité des instructions d'installation et d'utilisation avant d'installer, d'utiliser ou d'entretenir cet équipement.

Ne pas pulvériser des aérosols dans le voisinage de cet appareil alors qu'il est en fonctionnement.

Cet appareil ne doit pas être utilisé par des personnes dont les capacités physiques, sensorielles ou mentales sont réduites, ou des personnes dénuées d'expérience ou de connaissance, sauf si elles ont pu bénéficier, par l'intermédiaire d'une personne responsable de leur sécurité, d'une surveillance ou d'instructions préalables concernant l'utilisation de l'appareil.

Cet appareil n'est pas destiné à être utilisé par des enfants et ils doivent être surveillés pour s'assurer qu'ils ne jouent pas avec l'appareil.

Conservez ce manuel pour votre référence.

PARA SU SEGURIDAD

No guarde ni use gasolina o cualesquiera otros líquidos o vapores inflamables en las cercanías de éste o cualquier otro aparato.

ADVERTENCIA: La indebida instalación, operación, ajuste, modificación, servicio o mantenimiento puede ocasionar daños a la propiedad, lesiones o muerte. Lea detenidamente las instrucciones de instalacion y de operación antes de instalar, poner a funcionar o dar servicio a este equipo.

No pulverice aerosoles en las proximidades de este aparato mientras está en funcionamiento.

Este aparato no debe ser utilizado por personas con capacidades físicas, sensoriales o mentales reducidas, o que no tengan la experiencia y los conocimientos adecuados, a menos que estas personas hayan recibido supervisión e instrucciones en cuanto al uso del aparato por la persona responsable de la seguridad de ellas.

Guarde este manual para su referencia.

WARNING / AVERTISSEMENT / ADVERTENCIA

Improper installation, operation, adjustment, alteration, service or maintenance can cause property damage, injury or death. Read the installation and operating instructions thoroughly before installing, operating or servicing this equipment. / Toute mauvaise pratique en matière d'installation, de fonctionnement, de réglage, de modification, d'entretien ou de maintenance peut causer des dommages matériels, des blessures ou la mort. Lisez la totalité des instructions d'installation et d'utilisation avant d'installer, d'utiliser ou d'entretenir cet équipement. / La indebida instalación, operación, ajuste, modificación, servicio o mantenimiento puede ocasionar daños a la propiedad, lesiones o muerte. Lea detenidamente las instrucciones de instalacion y de operación antes de instalar, poner a funcionar o dar servicio a este equipo.

Do not lean on or place objects on the equipment. / Ne vous penchez pas sur oune placez pas des objets sur la lèvre. / No se apoye ni coloque objetos en el labio.

Hot product and surfaces. / Produit et surfaces chaudes. / Producto y superficies calientes.

Do not touch. / Ne pas toucher. / No la toque

Stand clear of product discharge path when discharging hot product. / Écartez-vous du chemin de décharge d'un produit chaud. / Permanezca alejado de la ruta de descarga del producto al vaciar producto caliente.

Keep hands away from moving parts and pinch points. / Gardez les mains loin des pièces mobiles et des points de pincement. / Mantenga las manos lejos de piezas movibles y puntos de presión muy localizada.

Inspect unit daily for proper operation. / Inspectez l'unité tous les jours pour son bon fonctionnement. / Inspeccione diariamente el funcionamiento correcto de la unidad.

Pressurized device. / Appareil sous pression. / Dispositivo de presión.

Keep clear of pressure relief discharge. / Restez à l'écart de la soupape de sureté. / Permanezca alejado de la descarga de presión.

Do not climb, sit or stand on equipment. / Il ne faut pas monter, s'asseoir ni se tenir debout sur l'équipement. / No subirse, ni sentarse ni pararse sobre el equipo.

Surfaces and product may be hot! Wear protective equipment. /Les surfaces et le produit peuvent être chauds! Portez un équipement de protection. / ¡Las superficies y el producto pueden estar calientes! Utilice equipo protector.

Heavy / Lourd / Pesado

Team or mechanical lift. / Équipe ou remontée mécanique. / Equipo o elevador mecánico.

Floor may become slippery from product spillage. / Déversement de produit peut causer de plancher à être glissante. / Derrame de producto puede causar piso a ser resbaladizo.

Unit must be anchored as per manual. / Unité doit être ancrée selon les directives du manuel. / Unidad debe estar fijado según el manual.

Do not fill kettle above recommended level marked on outside of kettle. / Ne remplissez pas la chaudière en excès du niveau recommandé marqué sur la chaudière. / No llene la marmita arriba del nivel recomendado marcado fuera de la marmita.

SERVICING / ENTRETIEN / SERVICIO

Have a qualified service technician maintain your equipment. / Demandez à un technicien en entretien et en réparation qualifié d'effectuer l'entretien de votre équipement. / Haga que un técnico de servicio calificado mantenga su equipo

Ensure kettle is at room temperature and pressure gauge is showing zero or less prior to removing any fittings. / Assurez-vous que la chaudière est à température ambiante et que le manomètre est à zéro ou moins avant de retirer des accessoires. / Asegúrese de que la marmita esté a temperatura ambiente y el manómetro esté mostrando cero o menos antes de retirar cualquier accesorio.

Remove electrical power prior to servicing. / Coupez l'alimentation électrique avant l'entretien. / Desconecte la energía eléctrica antes de darle servicio.

Risk of electric shock. / Risque de choc électrique. / Riesgo de choque eléctrico.

Operation, Installation & Maintenance Manual
SteamChef Models 22CET3.1 and 22CET6.1

Table of Contents

Chapter.....Page

1 General Safety 1
A. Laws, Codes, and Regulations 1
B. Operational Safety..... 1

2 Product Information 2
A. Product Information 2
B. Model Numbers and Serial Numbers 2
C. Product Information Plate 2
D. Product Views..... 3

3 Operation 4
A. Main External Power Switch 4
B. Door Interlock Switch 4
C. Inspect the Cooking Compartment 4
D. Power ON (Auto Water Fill / Automatic Preheat) 5
E. Preheat the Steamer..... 5
F. High Limit Reset..... 5

4 Control Panels 6
A. Keypad Timer Control Panel 6
B. Dial Timer Control Panel..... 7

5 Cooking with the SteamChef..... 8
A. Operating and Cooking Procedure – All Models..... 9
B. Operating and Cooking Procedure – Timed Mode 9
C. Operating and Cooking Procedure – Manual Mode..... 9
D. Operating and Cooking Procedure - Rethermalization 10

6 Shutdown and Cleaning..... 11
A. Shutdown and Cleaning Procedure 11

7 General Information 14
A. Inspect for Shipping Damage 14

8 Installation 15
A. Select a Location 15
B. Installation of a SteamChef 22CET3.1 or 22CET6.1 16
C. Install the Legs 17
D. Position and Level the 22CET 17
E. Install the KleanShield™ 17
F. Install the Fan Guard and Air Diverter 18
G. Install the Slide Racks (Pan Racks) 19
H. Install the Rear Vent 19
I. Connect the Free Air Vented Drain Line 19
J. Water Supply Requirements and Installation 21
K. Electric Power Supply 23
L. Installation Checklist 24

9 Operating Tests 25
A. Startup Procedure 25
B. Drain Rinse Inspection 26
C. Operating Tests and Final Checkout Procedure 26
D. Shutdown 28

10 Preventative Maintenance 29
A. Maintenance 29
B. Descale the Water Reservoir 30

11 Troubleshooting Guide 33

CHAPTER 1 SAFETY

A. Laws, Codes, and Regulations

This equipment should be installed only by qualified, professional plumbers, pipe fitters, and electricians.

1. The installation of this appliance must conform with:
   a. The National Electrical Code, ANSI/NFPA 70 (latest edition), or the Canadian Electrical Code, CSA C22.2, or local codes, as applicable.
      - When installed, the appliance must be electrically grounded in accordance with the above.
      - NOTE: This appliance is not GFI (GFCI) compatible.
   b. The *Food Code* (latest edition) of the Food and Drug Administration (FDA).
2. This equipment is to be installed to comply with the applicable federal, state, or local plumbing codes.
3. Installation instructions must be read in their entirety before starting installation of this appliance.
4. Install this appliance according to the policies and procedures outlined in this manual.
5. Installation must comply with all local fire and health codes.

⚠ DANGER

Improper installation, adjustment, alteration, service, or maintenance of this appliance, or installation of a damaged appliance can result in DEATH, INJURY, EQUIPMENT DAMAGE, and void the warranty.
NEVER install damaged appliances, equipment, or accessories.
ALWAYS have installation and service performed by qualified Cleveland Range authorized personnel.

B. Operational Safety

The Operational Safety section outlines minimum safety policies and procedures for operating one or more Cleveland Range appliances.

1. Do not store anything on top and underneath the appliance.
2. KEEP THE APPLIANCE AREA FREE AND CLEAR OF COMBUSTIBLES.
3. Proper air supply for ventilation is REQUIRED for and CRITICAL to safe, efficient operation of this appliance.
4. Place non-slip draining anti-fatigue mats rated for use in wet, greasy, or dry work areas on the floor in front of the appliance and other locations as needed. Obtain the best mats for your needs from your local supplier.
5. Wear BOOTS appropriate to the work area to help protect feet, and to help prevent slips and falls.
6. Allow only qualified Cleveland Range authorized service representatives to service the appliance.
7. Use only factory authorized repair parts.
8. Maintain written records of appliance service, maintenance, and repair. See Chapter 7.

⚠ DANGER

Operating this appliance out of level can cause DEATH, INJURY, and EQUIPMENT DAMAGE.
This appliance must be level both front-to-back and side-to-side in all installations.
NEVER operate this appliance out of level.
If this appliance is suspected to be out of level, shut it down at once and call your qualified Cleveland Range authorized service agency immediately.

CHAPTER 2 PRODUCT INFORMATION

A. Product Information

- This manual covers the operation of 22CET3.1 and 22CET6.1 SteamChef Steam Cookers (steamers), and their standard features and options.
- Other than selection of options, there are presently no significant design, parts, or operating differences among appliances with this model number.
- Figures 2-1 and 2-2 illustrate the dimensions, clearances, and major external features of 22CET's.

B. Model Numbers and Serial Numbers

1. Cleveland Range, LLC assigns two product identification numbers to each appliance: a model number and a serial number.
2. Please provide this information when you contact Cleveland Range or a qualified Cleveland Range authorized service representative:

- Model Number_____
  (Write the Model Number of your appliance here.)

- Serial Number_____
  (Write the Serial Number of your appliance here.)

C. Product Information Plate

The Product Information Plate on the back of the appliance lists:

- Model
- Serial Number
- Power and Wiring Requirements

D. Product Views

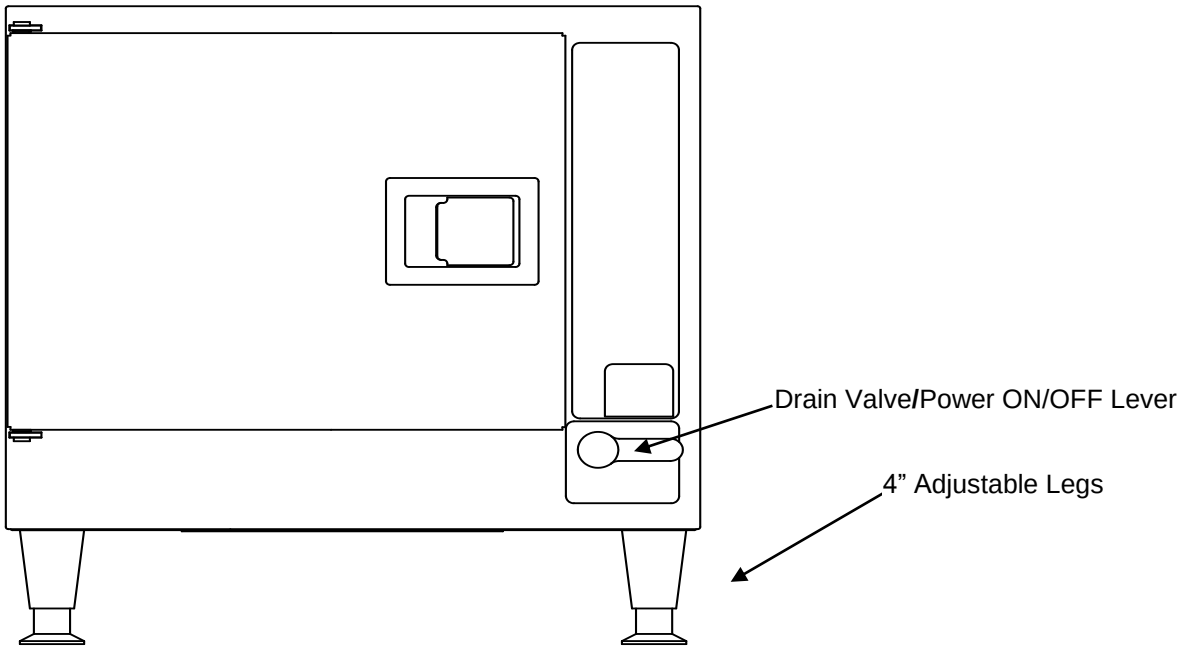

Figure 2-1 SteamChef™ Steam Cooker Front View
(Model 22CET3.1 Shown)

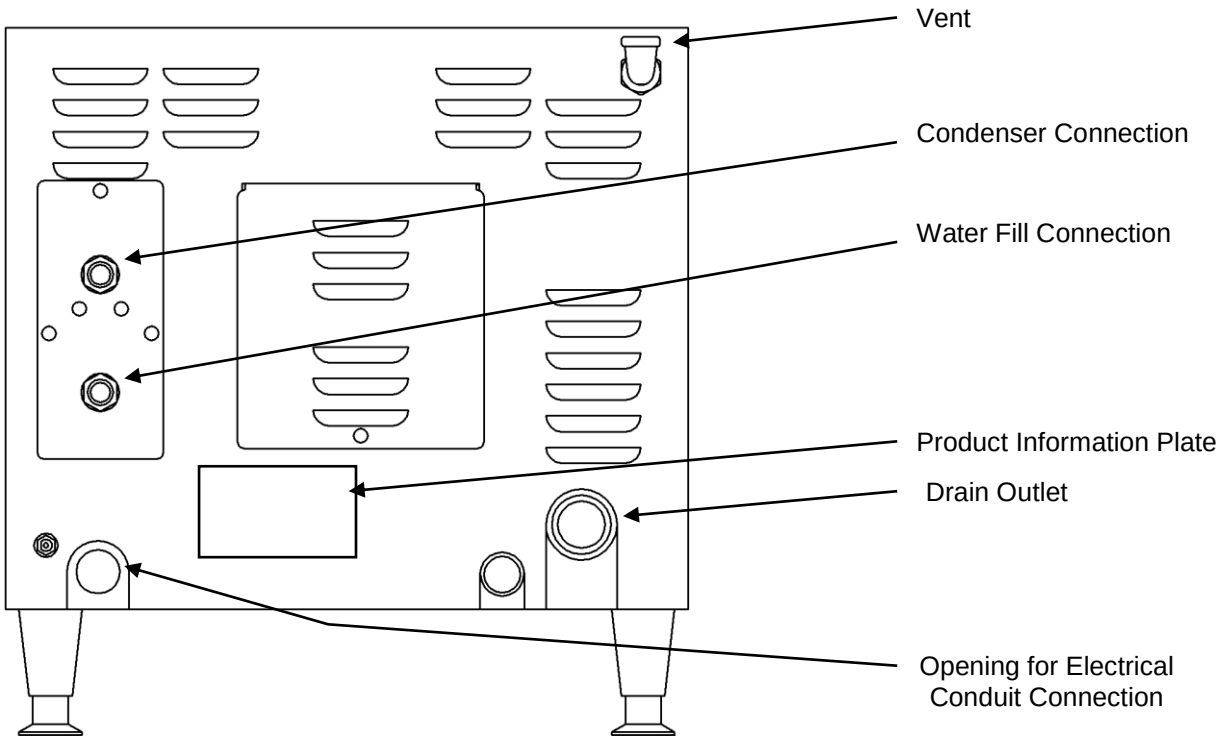

Figure 2-2 SteamChef™ Steam Cooker Rear View
(Model 22CET3.1 Shown)

CHAPTER 3 OPERATION

A. Main External Power Switch

- Usually the Main External Power Switch is left ON.
- To turn ON the Main External Power Switch:
  1. Turn the ON/OFF lever/switch to the OFF position.
  2. Turn ON the Main External Power Switch. See Figure 3-1.

     NOTE: The appliance will perform the automatic 3-minute drain rinse cycle.

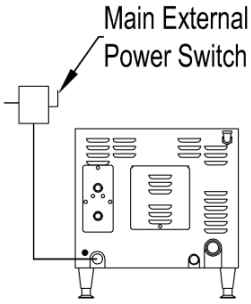

Figure 3-1

B. Door Interlock Switch

The steamer compartment of the SteamChef Steamer is equipped with an automatic door interlock switch that turns off the heating elements and shuts off the convection fan and condenser when the door to the compartment is opened.

⚠WARNING

Burn and Scald Hazard

Even though the heat shuts off as soon as the door is opened, it may take up to a minute for production of steam to end and residual steam in the system to clear from the cooking compartment.
To help avoid injury, always wait until the residual steam clears and the convection fan stops before reaching into the cooking compartment, and always wear dry heatproof gloves when reaching into the cooking compartment. Wet or damp gloves conduct heat and can cause burns when touching hot items. Failure to do so can cause burns, scalds, and other injuries.

C. Inspect the Cooking Compartment

1. Inspect the cooking compartment while the steamer is cold. After the steamer is turned on, it will be too hot to inspect or clean safely.
2. Before turning ON the power switch/lever to the SteamChef steamer make sure the inside of the steamer is clean. See Chapter 6 for complete cleaning instructions.
3. Remove the door gasket assembly, pan racks, backplate, fan guard, and KleanShield™ and make sure all surfaces are clean and drain openings and the water level sensors are clean and free of any residue or debris (See Figure 3-2).
4. Make sure that the KleanShield™ drain is clear by pouring about a quart of water through the KleanShield™ drain (See Figure 3-4 and 3-5). Make sure that the water flows out the steamer drain.

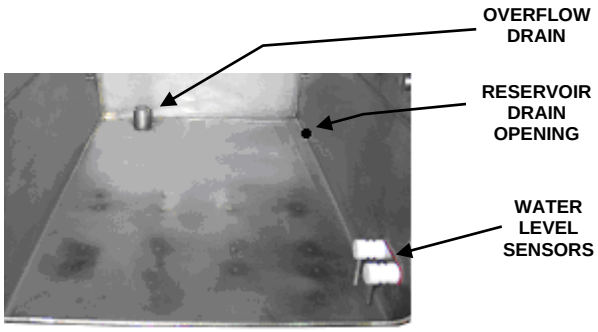

Figure 3-2 Inspecting Compartment drains (Model 22CET3.1 Shown)

D. Power ON (Auto Water Fill/Automatic Preheat)

1. Open the water supply valves to the steamer.
2. Set the Timed/Manual switch to timed (dial timer steamers) or set the Selector Switch to OFF.
3. Turn ON power to the steamer by turning the drain valve lever clockwise (down) to close the drain (see Figure 3-8). The power ON indicator lights and the water reservoir fills.
4. Close the door. When the water reservoir is filled to the minimum operating level the heater turns on and heats the water to the standby cooking temperature.
5. Time to Standby Temperature:
   - Dial timer steamers: When the “SureCook” indicator light goes OFF, the steamer is preheated.

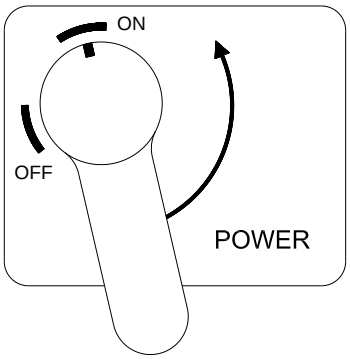

Figure 3-8
ON/OFF Lever
(Shown in ON Position)

E. Preheat the Steamer

- Preheat to help ensure productivity and consistency.
- **BEFORE PREHEATING:** Inspect and clean the compartment. After preheating, the compartment will be too hot to inspect and clean safely.
- To preheat the SteamChef Steamer:
  1. Close the steamer door and turn the steamer ON 15 minutes before cooking.
  2. The Steamer will heat to the standby temperature.

F. High Limit Reset

- This steamer has a high limit lockout to protect the unit from overheating.

- If the high limit lockout temperature is reached:
  1. The RESET light will turn ON
  2. A buzzer will sound continuously
  3. The heater will shut OFF
  4. The steamer must be reset before cooking can continue

- To reset the high limit:
  1. Turn OFF power to the steamer with the ON/OFF lever.
  2. Wait 15 minutes for the steamer to cool
  3. Make sure the water probes are clean (Chapters 3 and 6).
  4. Refill with water and restart according to the Power ON instructions (Chapter 3).
  5. If the problem repeats, see the Operators Troubleshooting Guide (Chapter 8).

CHAPTER 4 CONTROL PANELS

⚠ CAUTION

Press switches and keys with fingertips only.
Injury and equipment damage can result from pressing switches and keys with anything else.

A. Keypad Timer Control Panel

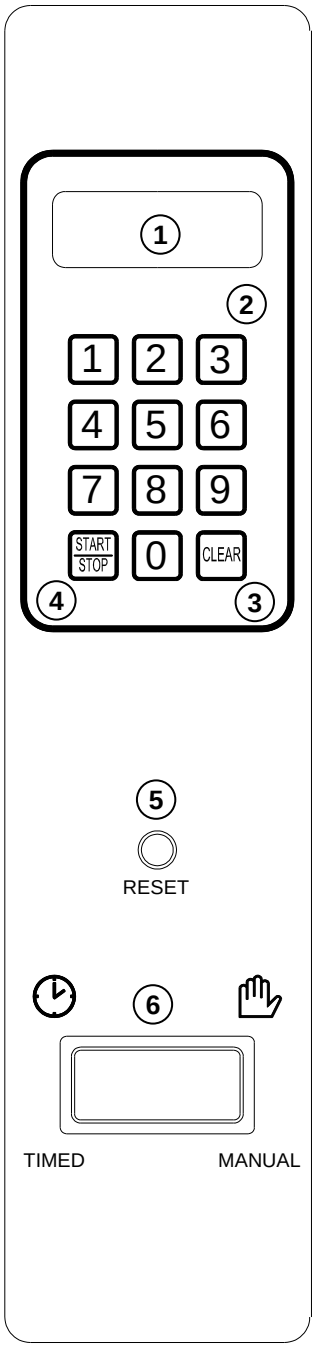

Figure 4-1
Keypad Timer
Control Panel

1. TIMER Display
   - The four-digit display shows the minutes and seconds remaining in the countdown.
   - The display reads from zero (00:00) to 99 minutes and 99 seconds (99:99).
   - Pause (PAUS) appears when the count down is stopped by the START/STOP key or by SureCook.
2. Number Keys 0-9
   - These keys set the number of minutes and seconds in the timer count down.
   - Example: Pressing the number keys 1, 2, 3, 4, sets the timer for 12 minutes and 34 seconds (12:34).
3. CLEAR Key
   - This key resets the Timer to zero (00:00) after it has been stopped.
   - The Timer must be reset to zero (00:00) ("zeroed") by pressing this key before a new time can be set.
4. START/STOP Key
   - Press this key to start and stop the Timer.
   - In TIMED mode, press this key to start and stop both the Timer and steaming.
   - In MANUAL mode, the Timer counts down but does NOT start or stop steaming.
   - Press this key to silence the buzzer.
5. RESET Indicator lights when the High Limit circuit trips. The light stays ON, and a buzzer sounds until the appliance is reset.
   To reset:
   1) Turn OFF power to the steamer with the Power ON/OFF Lever.
   2) Wait 15 minutes for the appliance to cool.
   3) Make sure the probes are clean.
   4) Follow the Power ON instructions.
   5) If the appliance needs reset again, see the Operator's Troubleshooting Guide.
6. TIMED/MANUAL Switch
   - The TIMED/MANUAL switch selects the Timed or Manual Mode.

   To Use the KEYPAD Timer in Manual Mode:
   - <u>The Timer does NOT start or stop steaming in Manual Mode.</u>

   1) Set and start the Timer.
   2) The KEYPAD Timer counts down only when the cooking compartment is at cooking temperature.
   3) The buzzer sounds when the Timer reaches zero.

B. Dial Timer Control Panel

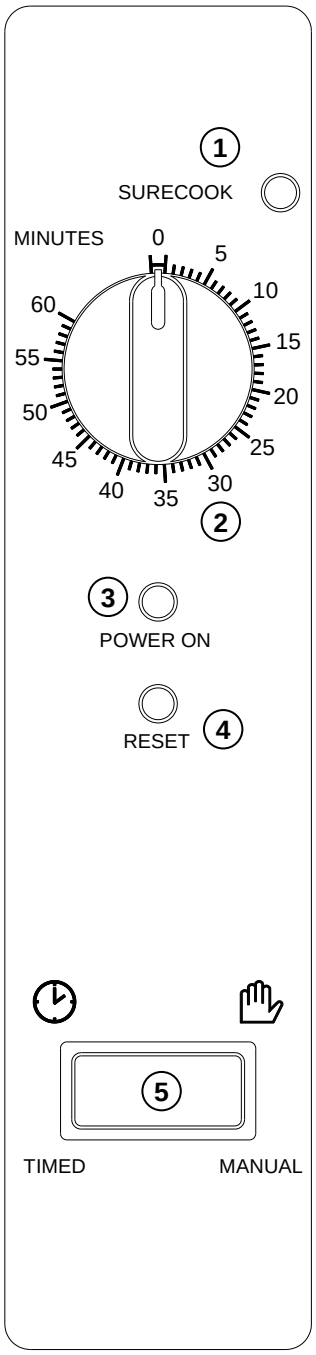

Figure 4-2
Dial Timer
Control Panel

1. SURECOOK Indicator Light
   - This light is lit whenever the cooking compartment is below cooking temperature.
   - Note: When in the Timed mode, the timer will not count down when this light is ON.
2. TIMER
   - The Dial Timer sets the operating time from 0 to 60 minutes.
   - Turn the knob clockwise until it points to the required time.
   - When the Timer reaches 0, a buzzer sounds for 3 seconds.
   - The Dial Timer does **NOT** work in Manual Mode.
3. POWER ON Indicator Light
   - When the Green indicator light is ON, power is ON to the controls.
4. RESET Indicator lights when the High Limit circuit is open. The light stays ON, and a buzzer sounds until the appliance is reset.
   To reset:
   - Turn OFF power to the steamer with the Main Power ON/OFF LEVER.
   - Wait 15 minutes for the appliance to cool.
   - Make sure the probes are clean.
   - Follow the Power ON instructions.
   - If the appliance needs reset again, see the Operator's Troubleshooting Guide.
5. TIMED/MANUAL Switch selects the manual or timed operating mode.

CHAPTER 5 COOKING WITH THE SteamChef

⚠ DANGER

DO NOT BREATHE STEAM, HOT AIR OR CONDENSATE DEATH OR INJURY WILL RESULT.

⚠WARNING

Hot Air, Steam, and Condensate will cause Burns and Scalds.
To help prevent burns and scalds when opening steamer doors: always stand to the hinge side and back from the doors, slowly open the door, and wait for the steam and heat to dissipate before carefully opening the door.

⚠ CAUTION

Some foods drip juices.
Use a solid catch pan under perforated pans when cooking food that drips juices.
Dripping juices can cause burns and clog the drain and KleanShield™.

⚠ CAUTION

Do **NOT** use oven racks that are bent or otherwise damaged in any way.

DO Insert pans and accessories LEVEL and INSIDE the oven racks.

Pans and accessories placed in damaged or out of level racks, or outside racks can tip and spill, causing burns, injuries and/or equipment damage

⚠WARNING

The SteamChef Steamer is a continuously operating appliance, so parts are **ALWAYS HOT** when the main external power switch or the ON/OFF lever is in the ON position.
When the ON/OFF lever is turned to the OFF position, the SteamChef will remain HOT for some time.
Contact with hot surfaces and steam can cause burns and scalds.
Avoid contact with hot surfaces and steam.

⚠WARNING

If the steamer door is stuck shut: DO NOT force the door open.
The door stuck shut may indicate a blocked drain.
Hot water can fill the cooking compartment and spill out if the door is forced open causing injury and equipment damage.

If the SteamChef door is stuck shut:

- Turn OFF the steamer.
- Call a qualified Cleveland Range authorized service technician.
- Wait for the steamer to cool before servicing.

A. Operating and Cooking Procedure – All Models

NOTE: The condenser water does not flow until the cooking compartment reaches the minimum cooking temperature to reduce steam loss and condenser water use.

- If condenser flow starts before the cooking compartment reaches cooking temperature, turn OFF the steamer and call your qualified Cleveland Range authorized service representative.

1. Before Cooking or Rethermalizing
   a. Inspect the cooking compartment, drain, KleanShield™, and clean as required BEFORE turning ON the SteamChef. It will be too hot to inspect and clean safely after turning ON. See Chapters 3 and 6.
   b. Turn ON and fill the SteamChef. See Chapter 3.
   c. Preheat the cooking compartment. See Chapter 3.
   d. Slide the pans of food into the slide racks inside the SteamChef. Do not place pans or anything else on the bottom of the compartment or on the KleanShield™.
   e. For best results, use 2-1/2-inch-deep, perforated pans without covers. These give the best heat transfer and shortest cooking time.
   f. Close the cooking compartment door.
2. While cooking, occasionally check the water in the reservoir for food particles and oils. If the water is dirty or cloudy, change the water. See Chapters 3 and 6.
3. After Cooking or Rethermalizing
   a. Carefully open the cooking compartment door and remove the pans from the slide racks.
   b. If the SteamChef will not be used again, perform the Cleaning Procedure in Chapter 6.

B. Operating and Cooking Procedure – Timed Mode

In Timed Mode, the Timer starts and stops the cooking operation.

NOTE: When in the Timed Mode and the compartment door is closed, and the Timer is NOT set, the cooking compartment remains at the Standby temperature.

1. The control panel settings must be:
   - The ON/OFF Lever is in the ON (down) position and the Power indicator light is lit.
   - The TIMED/MANUAL switch is in the TIMED position.
2. Set the required cooking time. The Timer starts counting down as soon as the compartment reaches cooking temperature.
3. When the Timer reaches zero, a buzzer sounds for 3 seconds; the heater turns OFF, and the cooking compartment temperature lowers to the Standby temperature.

C. Operating and Cooking Procedure – Manual Mode

The operator starts and stops the steaming operations, and controls the cooking time, including cooking compartment heat-up time.

Tip: Use the Manual Mode to maintain the cooking compartment temperature between batches.

1. The control panel settings must be:
   - The ON/OFF Lever is in the ON (down) position and the Power indicator light is lit.
   - The TIMED/MANUAL selector switch is in the MANUAL position. The steaming cycle starts as soon as the switch is moved to MANUAL.
2. To stop steaming in Manual Mode: set the selector switch to the TIMED position and make sure that the Timer is set to zero. The burner turns off, and steam production in the cooking compartment gradually stops.

D. Operating Procedure – Rethermalization

- The SteamChef may also be used to reheat/rethermalize previously cooked and/or refrigerated foods to serving temperature.
- Depending on initial food temperature and density, most foods will rethermalize to their safe serving temperature in 10 to 40 minutes.

To use the SteamChef to reheat/rethermalize food to a safe serving temperature.

1. Always check internal temperature of food with a thermometer to determine that it has been rethermalized to its safe serving temperature.

CHAPTER 6 SHUTDOWN AND CLEANING

A. SHUTDOWN AND CLEANING PROCEDURE

This procedure should be performed at the end of each day or shift, or more frequently if the water supply does not meet the Minimum Water Quality Requirements in the Warranty.

⚠WARNING

The steamer stays hot for a long time.
To help avoid burns: Allow the steamer to cool completely before cleaning or servicing.

⚠WARNING

Do NOT use hoses, power cleaners, or pressure washers on or in the SteamChef Steamer.
Doing so can cause electric shock and / or damage electrical and electronic components.

⚠WARNING

A clogged or slow drain can cause hot water to collect in the oven compartment and spill out when the door is opened causing injury and equipment damage.

Never push food debris or scale down the steamer drain, or through the KleanShield™ opening. Debris and scale can build up in the drain system and clog or slow the drain and lead to additional maintenance and service problems.

Always remove any solid matter from the inside of the steamer with a rag or spatula before rinsing cleaning water down the drain.

⚠WARNING

When cleaning: do NOT pick up or tilt the SteamChef. If it is necessary to move a SteamChef for cleaning, turn OFF power at the Main External Power Supply and at the ON/OFF Lever to drain the water from the SteamChef.

Injury and equipment damage can result from shifting the SteamChef out of level while the power is turned on at the Main External Power Supply and/or water is in the SteamChef .

The steamer MUST BE LEVEL BOTH FRONT TO BACK AND SIDE TO SIDE in all mounting arrangements before operation. Check level front to back and side to side before restoring power as described in the Installation Manual after moving the SteamChef.

Failure to do so can cause injury and equipment damage.

Cleaning Procedure (Continued)

1. Turn the ON/OFF lever counter-clockwise (up) so that the white reference marker on the lever is pointing directly left to turn the power OFF, de-energize all controls, and drain the steamer. The appliance will begin a 3-minute drain rinse cycle to clean the drain system
2. Open the cooking compartment door and allow steamer to cool.
3. Remove any spilled food from the surface of the KleanShield™.
   - Never push food scraps down the KleanShield™ opening or the reservoir drain opening.
4. Remove the slide racks, fan guard and KleanShield™. Wash and rinse slide racks, fan guard and KleanShield™ separately or clean them in a dishwasher according to health requirements.
5. Remove any spilled food from inside compartment and clear any residue from the drain valve and the KleanShield™ drain opening.
   - Do not push food debris or scale down the steamer drain, or through the KleanShield™ drain.
6. Clean the interior of the compartment thoroughly, removing all food particles and scale from the steamer.
7. Wipe down the interior of the cooking compartment with a half water and half white household vinegar solution. Use a spray bottle of the same vinegar solution to rinse the convection fan located at the back of the cooking compartment.
   - When done daily this will help prevent the buildup of calcium and other mineral deposits left over from the boiling of water, and prevent scale buildup in the steamer, helping prevent more costly maintenance and service on the steamer.
   - Cleveland Range does not recommend the use of detergent, but if detergent has been used to clean the inside of the steamer, be sure to rinse off the probe assembly with the vinegar solution. If detergent residue is not completely rinsed from the probe assembly then the residue can prevent the water level control from operating.
8. Use a soft bristle brush to clean the water sensor, temperature probe, and fan and to remove stubborn food particles.
9. Do not use abrasive cleaning compounds or steel wool.
10. Rinse the inside of steamer compartment and drain valve thoroughly with clean water.
11. Inspect the probe assembly and clean it with a soft bristle brush or similar non-abrasive cleaning means.
12. Clean the door assembly.
    a. Remove the door gasket assembly (see Figure 6-1).
    b. Note the keyhole slots on the door and the retaining pins on the gasket assembly. Grasp the gasket assembly at the sides and lift up and towards you to remove the assembly.
    c. Clean all surfaces of the gasket assembly, as well as the inside of the door, by wiping with a damp cloth.
    d. Rotate the liner assembly 180° and replace the gasket assembly by sliding the retaining pins into the keyhole slots. Either long edge of the gasket assembly can be positioned at the top. Periodic rotating of the door assembly will help increase the door gasket life.

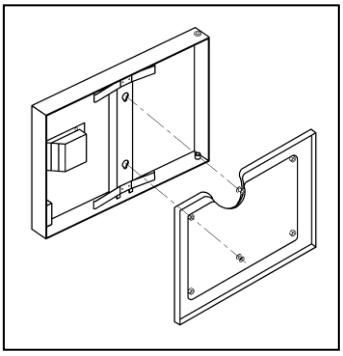

Figure 6-1
Door Gasket Assembly

13. Replace the cleaned KleanShield™, slide racks and fan guard. (See Chapter 3.)
14. Wipe the exterior with a damp cloth only.
15. NEVER HOSE DOWN THE STEAMER. Electrical components inside the unit will not function correctly if wet or damp and may cause a shock hazard.

16. After cleaning, leave the steamer door open until the next steamer operation. This prevents compartment odor buildup and helps increase gasket life.

CHAPTER 7 GENERAL INFORMATION

A. Inspect for Shipping Damage

- If the appliance is damaged or damage is suspected:

1. Submit a Damage Claim to the Shipper immediately.
2. Inform your dealer at once.
3. Inform Cleveland Range in writing within three (3) days.

CHAPTER 8 INSTALLATION

⚠ DANGER

Operating this appliance out of level can cause DEATH, INJURY, and EQUIPMENT DAMAGE.
This appliance must be level both front-to-back and side-to-side in all installations.
NEVER operate this appliance out of level.
If this appliance is suspected to be out of level, shut it down at once and call your qualified Cleveland Range authorized service agency immediately.

A. Select a Location

1. For safe and efficient operation:
   a. Installation must comply with all local fire and health codes.
   b. The location selected must be capable of supporting this appliance.
      - The operating weight of a 22CET3.1 is 270 pounds and a 22CET6.1 is 350 pounds.
   c. Position the appliance so it will not tip or slide.
   d. The operating surface must be level enough to allow leveling with the adjustable legs. This appliance **MUST** be level both front to back and side to side before operation.
   e. A suitable drain must be available within 12 feet of this appliance.
   f. The location must include space for Operating and Service/Secondary Clearances and the Exhaust Hood. See Figures 2-1 and 2-2.

⚠WARNING

All clearance requirements above, below, and around this appliance are the same for non-combustible locations as for combustible locations.
Failure to maintain required clearances and additional distances as needed can result in INJURY and EQUIPMENT DAMAGE.
Consult manufacturers' literature, and sales and service agencies as needed.

   g. KEEP THE APPLIANCE AREA FREE AND CLEAR OF COMBUSTIBLES.
   h. Proper air supply for ventilation is REQUIRED for and CRITICAL to safe, efficient operation of this appliance.
   i. Make sure the air vents of this appliance are not blocked with or by anything.
   j. Allow for sufficient extra distance if a "high heat source," e.g. a broiler, is located next to this appliance. Contact Cleveland Range at 216-481-4900 or 1-800-338-2204 for recommendations.
   k. Do NOT install this appliance directly over a drain. Steam rising up out of the drain will adversely affect operation, hamper cooling air circulation, and damage electrical and electronic components.

B. Installation of a SteamChef 22CET3.1 or 22CET6.1

⚠ DANGER

Improper Lifting can cause DEATH, INJURY, and EQUIPMENT DAMAGE

A 22CET3.1 weigh 270 pounds, and a 22CET6.1 weighs 350 lbs.

Use enough workers with experience lifting heavy equipment to place the appliance on the supporting surface.

⚠ CAUTION

Attempting to operate an improperly installed or out of level steamer or shifting the steamer while operating can cause injury and equipment damage.

The steamer must be LEVEL both FRONT-TO-BACK and SIDE-TO-SIDE and PROPERLY INSTALLED in all mounting arrangements.

Do NOT shift or move the steamer while it is operating.

Do NOT operate an improperly installed steamer.

a. 22CET's are typically installed with four adjustable legs. See Figures 2-1 and 2-2.
b. The appliance must be level both front-to-back and side-to-side.
c. The operating surface must be level enough to allow leveling the appliance using the adjustable legs of the appliance or the stand.
d. The counter area selected must be capable of supporting an operating weight of:
   - 270 pounds for a SteamChef 3.1.
   - 350 pounds for a SteamChef 6.1.
e. If a satisfactory counter location is not available use an equipment stand:
   - UNISTAND 34 for one 22CET3.1 or 22CET6.1.
   - UNISTAND 25 for two 22CET3's, one on top of the other.
   - Model No. ES263044 Stacking Stand for two 22CET6.1's, one on top of the other.

C. Install the Legs

1. The legs must be used unless the 22CET is installed on a Cleveland Range stand.
2. To safely assemble the legs onto the 22CET without damage, follow this procedure:
   a. Check that the feet are fully retracted into the legs. Do not tighten. The feet should easily screw in and out using fingers only.
   b. Remove the four foam packing blocks from the upper packing assembly and position them on a flat surface (e.g. the floor) as shown in Figure 3-1.
   c. Center the steamer on the blocks as shown in Figure 3-1 and 3-2.
   d. Screw the four legs into the mounting holes. All four legs must be used for proper installation of a 22CET.
   e. Lift the 22CET off the blocks and move it to its installed location.
   f. Discard the foam packing blocks.

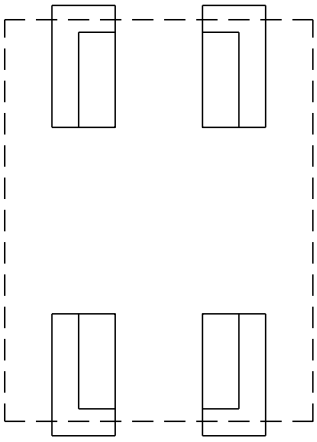

Figure 3-1
Top View Steamer on Foam Packing Blocks

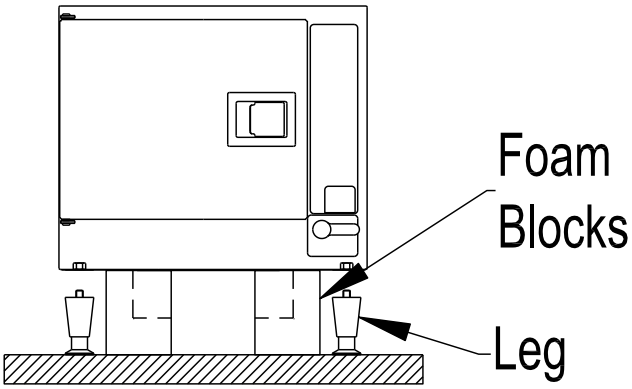

Figure 3-2
Front View Steamer on Foam Blocks

D. Position and Level the 22CET

1. Move the 22CET to its installed location.
2. Using a level, adjust the legs of the 22CET or the legs of the Cleveland Range stand until the 22CET is level front-to-back and side-to-side.

E. Install the KleanShield™

a. Never operate a SteamChef Steamer without a properly installed KleanShield™.
b. To install the KleanShield™:
   1) Remove the slide pan racks.
   2) Place the KleanShield™ into the steamer with the drain to the back of the cooking compartment and the pipe extension facing down.
   3) Set the KleanShield™ in place over the corresponding pipe extending out of the bottom of the steamer reservoir. See Figure 3-3.
   4) Fit the pipe from the KleanShield™ into the corresponding pipe in the bottom of the steamer.
   5) KleanShield™ legs must be flush against the bottom of the steamer. See Figure 3-4.

⚠ WARNING

Never operate a SteamChef™ Steamer without the KleanShield™ properly installed in the bottom of the water reservoir or the fan guard installed over the fan. Failure to do so can cause injury and equipment damage

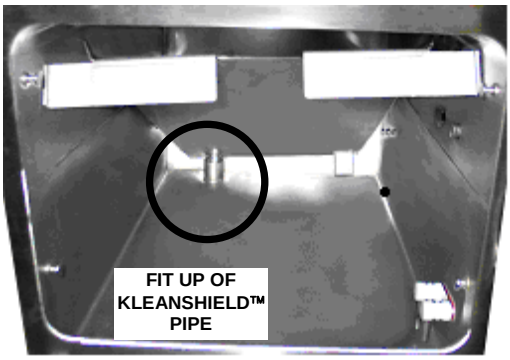

Figure 3-3 KleanShield™ Installation (SteamChef 3.1 shown)

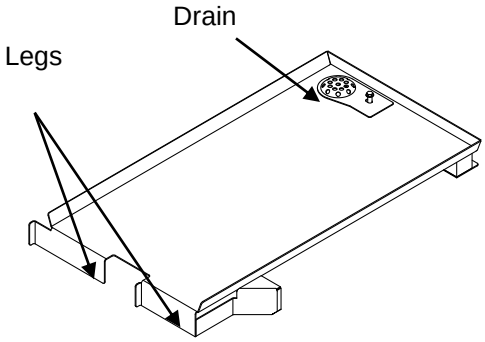

Figure 3-4 KleanShield™

F. Install the Fan Guard and Air Diverter

- See Figure 3-5

1. Hold the fan guard so that the large ends of the keyhole slots are towards the bottom of the steamer.
2. Place all four large end openings of the keyholes over the mounts located on the rear wall of the steamer.
3. Pull it down so that the narrow ends of the slots are pulled tight over the mounts. See Figure 3-5.
4. Place the air diverter onto the fan guard as shown.

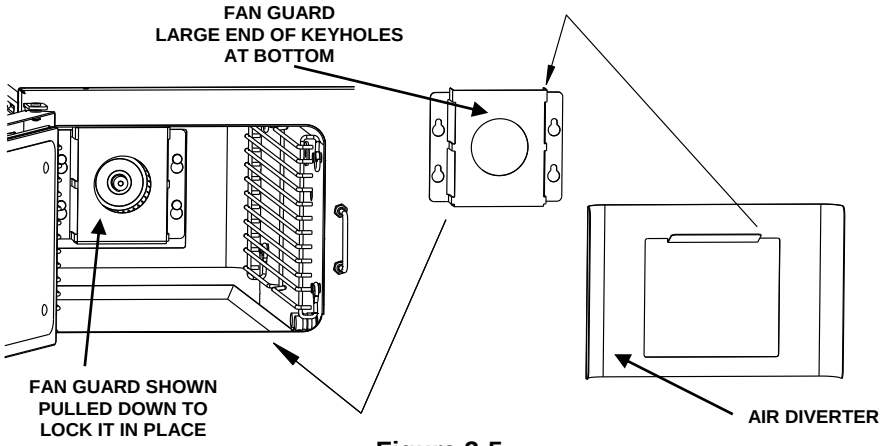

Figure 3-5
Fan Guard Shown Installed
(SteamChef 3.1 Shown)

G. Install the Slide Racks

- See Figure 3-6. Each rack has four loops: two at the top and two at the bottom.

1. Hold the slide rack so the ends of the hanger loops are toward the side of the cooking compartment.
2. Slide one rack into the compartment with loops toward one side.
3. Hook the loops over the top and bottom pins.
4. Repeat steps 1 to 3 for the other racks.

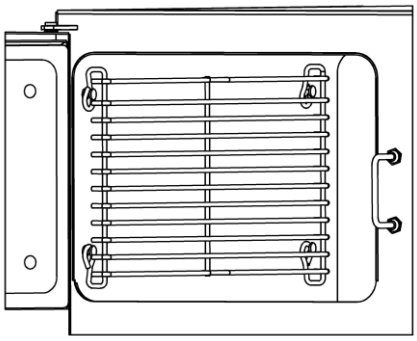

Figure 3-6
Slide Rack

H. Install the Rear Vent

- For 22CET's not on stacking stands:

1. Using pipe thread sealant (not provided), install the provided brass street ell into the bulkhead fitting on the rear of the 22CET. See Figure 3-7.
2. Connect the drain to a free air vented drain line. See Figure 3-8.

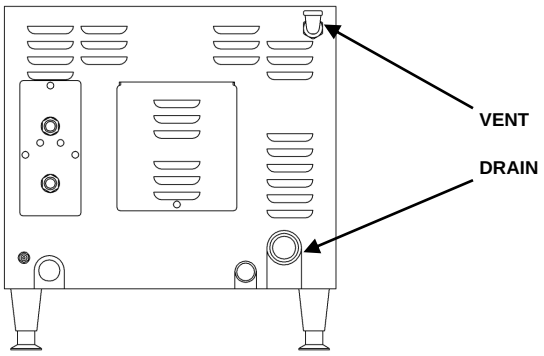

Figure 3-7
Steam Vent
(SteamChef™ 3.1 Shown)

I. Connect the Free Air Vented Drain Line

⚠ DANGER

DEATH, INJURY, EQUIPMENT and PROPERTY DAMAGE will result from improper installation of drain outlet lines. Install free air vented drain lines as described in this manual.

NOTICE: Furnishing and installing drain lines and drainpipe is the responsibility of the Installer/Owner.

<u>The following restrictions and requirements are critical to the safety of personnel and equipment, and must not be violated under any circumstances:</u>

1. The drain lines must be installed in compliance with the *Food Code* (latest edition) of the Food and Drug Administration (FDA), and any other applicable national, state, or local codes and regulations.
2. The drain line must be free air vented, have gravity flow from the appliance, and terminate outside the perimeter of the appliance.
3. Free air venting requires a minimum 1” clearance between the end of the drain line and the top of the floor drain. See Figure 3-8.
4. Do NOT install the appliance directly over a drain. Steam rising up out of the drain will adversely affect operation, hamper cooling air circulation, and damage electrical and electronic components.
5. Do NOT connect the appliance’s drain connection to any drain material that cannot sustain 140° F.
6. Do NOT connect any other drain from any other equipment to the drain line of this appliance.
7. Do NOT connect the drain outlet extension line directly into a floor drain or a sewer line.
8. Do NOT connect this appliance’s drain directly to drains or to the plumbing of any other equipment. (Except when using a Cleveland Range Stacking Stand.)
9. Do NOT install a trap or shutoff in the drain line.
10. **Drainpipe Size and Length Guidelines:**
    - **Do NOT make a drainpipe outlet extension more than 12 feet long.**
    - **Do NOT use more than three elbows.**
    - **Up to 6’ pipe:** 1 1/2-inch pipe and fittings are acceptable.
    - **Up to 2 elbows:** 1 1/2-inch pipe and fittings are acceptable.
    - **6’ to 12’ pipe:** 2-inch pipe and fittings are required.
    - **3 elbows on any extension:** 2-inch pipe and fittings are required.
11. Connect the drain to the appliance. See Figure 3-8.
    a. The steamer is supplied with a 1 1/4-inch pipe connection at the bottom of the drain tee. Do not reduce pipe size.
    b. Make sure the drain pipe is the correct size. See Item 10.
    c. While assembling the pipes and fittings of the drain outlet extension, use non-hardening pipe thread sealant.
    d. Thread fittings together FINGER TIGHT ONLY! DO NOT USE A WRENCH!

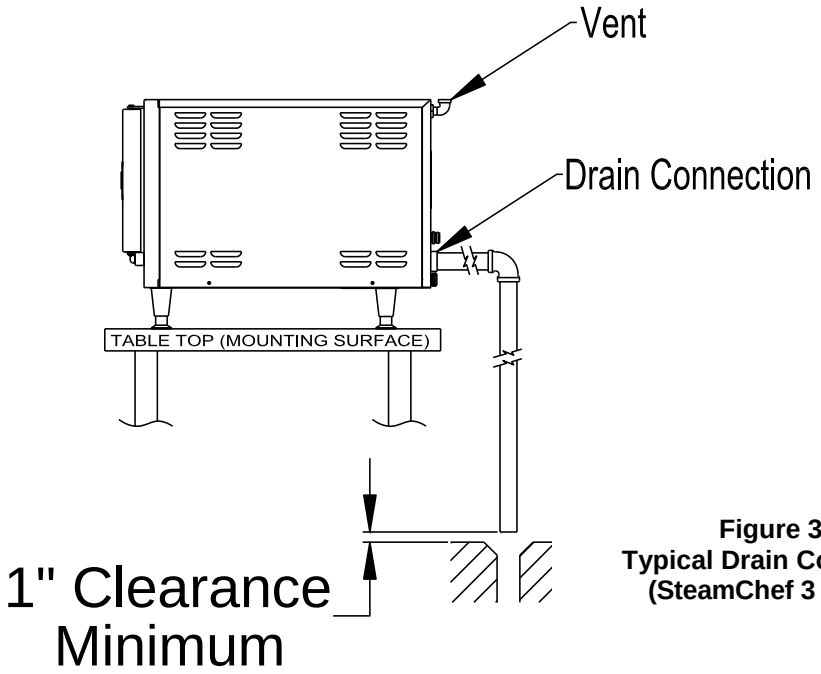

Figure 3-8
Typical Drain Connection
(SteamChef 3 Shown)

J. Water Supply Requirements and Installation

1. Water Supply Requirements

a. Water Quality

Unlike most steam cooking equipment, water quality can vary without major loss of performance of a SteamChef steamer. Even hard water will not affect the operation of a SteamChef Steamer if it is cleaned with vinegar daily.

- See the Operator's Manual for cleaning instructions.

b. Water Supply System

- A potable water supply system must be available providing a minimum dynamic pressure of 35 psi and a maximum static pressure of 60 psi.
- If the static pressure is above 60 psi, a pressure regulator must be used and set at approximately 50 psi. Pressure above 60 psi can damage the solenoid valves.

2. Install the Water Supply Lines

Installation Requirements:

- The Garden Hose Thread (GHT) connector used must be NSF rated for food grade service.
- Do NOT apply pipe thread sealant to NHT or GHT connections.
- Apply non-hardening pipe thread sealant to all other threaded connections.
- Install a manual water shut-off valve (Main Water Shutoff Valve) (not provided) between the cold-water supply line(s) and the appliance.
- The National Sanitation Foundation (NSF) requires installation of a check valve (or other approved anti-backflow / anti-siphon device) (not provided) in all supply lines in accordance with and as required by local, state, and national health, sanitation and plumbing codes.
- Flush the water supply lines before connecting the lines to the appliance.

a. Connect the Water Supply Lines

- The Installer/Owner is responsible for the water connection of this appliance.
- This appliance is to be installed to comply with all applicable federal, state, or local plumbing codes.
- **Connect this appliance to COLD WATER** The condenser system and steam generator will not work properly if they are connected to HOT or WARM water.

b. Water supply must have a minimum dynamic (flow) pressure of 35 psi and a maximum static pressure of 60 psi.

c. If the static pressure is above 60 psi, a pressure regulator must be used and set at approximately 50 psi. Pressure above 60 psi can damage solenoid valves. See Figures 3-10 and 3-11.

d. Install a manual water valve between the main cold-water supply line(s) and the steamer supply lines.

e. The National Sanitation Foundation (NSF) requires installation of a check-valve (or other approved anti-backflow / anti-siphon device) (not provided) in all supply lines in accordance with and as required by local, state, and national health, sanitation, and plumbing codes.

- Check local codes to determine exactly what type of anti-backflow / anti-siphon device is necessary to meet local requirements.

f. Design the water supply line(s) so the unit can be moved for service.

g. If the supply water meets the requirements shown in the Warranty, then the Single Water Supply Arrangement shown in Figure 3-10 may be used.

- If using the single water supply arrangement: The supply piping to the tee fitting must be at least the next larger size of pipe than the connection provided on the appliance.

h. Although, 22CET's are very tolerant of hard water, the owner may want to use conditioned water to supply the reservoir. To use a separate conditioned water supply, use the layout shown in Figure 3-11.

i. The steamer has two 3/4-inch GHT fittings, one for the water reservoir and one for the condenser. See Figures 2-1 and 2-2.

   A Filter Washer (dirt filter) is supplied installed in each of the water inlets. See Figure 3-9.

   1. Construct all supply lines up to the 3/4-inch NHT fittings.
   2. Flush the water supply lines before connecting them to the 3/4-inch fittings.

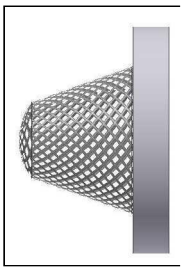

Figure 3-9
Filter Washer
(P/N 110987 Shown)

3. Test Water Supply Lines

a. Check all connections for proper tightness.
b. Remove the control side panel to inspect water connections inside the steamer.
c. Open the water supply valves.
d. Check all lines and connections for leaks, both inside and outside the steamer.

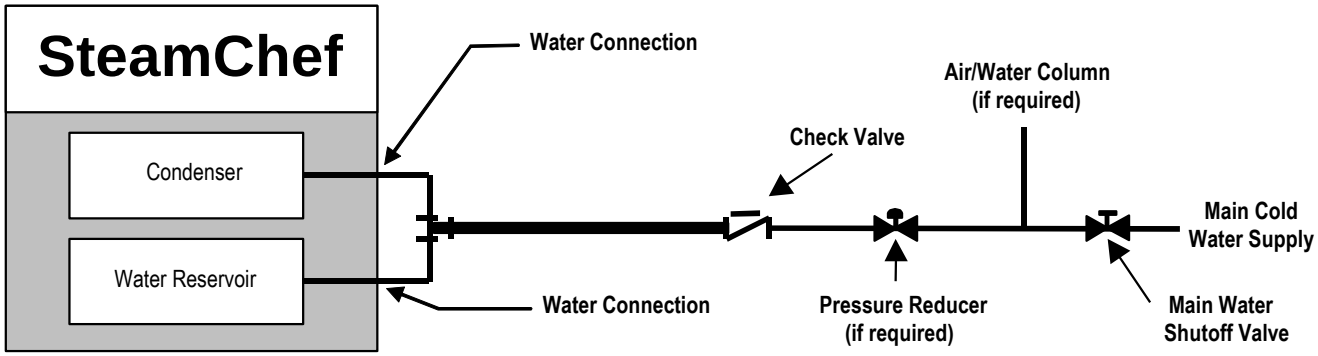

Figure 3-10 Cleveland Range Single Water Supply Arrangement

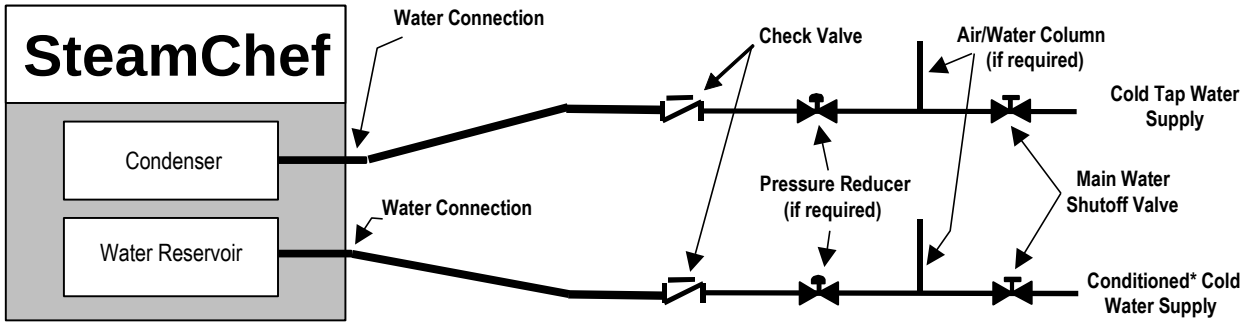

Figure 3-11 Cleveland Range Separate Water Supply Arrangement when Using Separate Conditioned Feed Water Supply

* “Conditioned” indicates water that has been filtered or treated by a Cleveland Range approved method to meet or exceed the water quality standards listed in the Warranty

K. Electric Power Supply

- The electric supply must match all electrical and wiring requirements specified on the rating plate.
- NOTE: This appliance is **NOT** Ground Fault Interrupter (GFI or GFCI) compatible.
- The Electrical Diagram is located on the back of the control-side cover.

⚠WARNING
This appliance is not GFI (GFCI) compatible. Do not use a GFI (GFCI) circuit. Using a GFI (GFCI) circuit can result in injury, equipment damage, and property damage.

The connection must be made as follows:

1. Install a main disconnect switch and a separate fuse or breaker for this appliance as shown in Figure 3-12. The fused disconnect switch is called the “Main External Power Switch.”
2. Do not use a GFI (GFCI) circuit. This appliance is not GFI compatible.
3. **Do NOT use a power cord.**
4. Make the electrical connection using flexible conduit, per local code.
5. There should be a sufficient length of flexible conduit between the steamer and the wall so the appliance can be moved for service.
6. Mechanically secure the flexible conduit to the electrical access hole found at the rear of the appliance. See Figure 3-13.
7. Refer to the wiring diagrams and Figure 3-14. Connect the wires to the terminal block and ground connector.
8. The appliance must be electrically grounded by the installer.

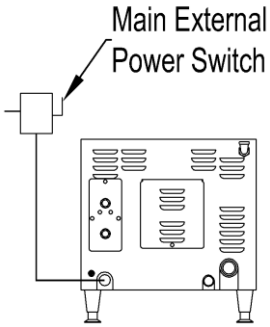

Figure 3-12
Electrical Layout

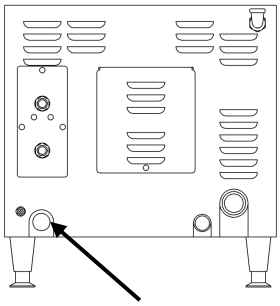

Figure 3-13
Electrical Connection Inlet

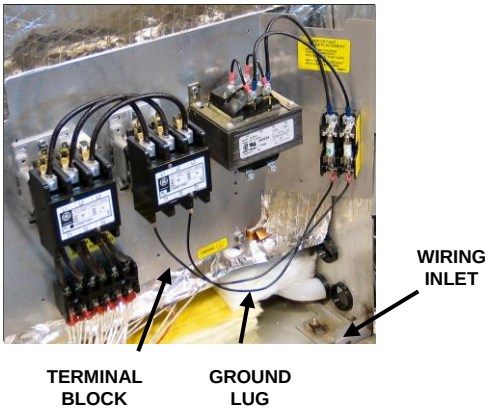

Figure 3-14
Electrical Connections

L. Installation Checklist

TASK	REFERENCE	COMPLETED
Preparation	Chapter	
Make sure electric power requirements are met	Ch.8 & Spec Sheet	
Check operating location clearances	Ch.8 & Spec Sheet	
Make sure location and exhaust hood requirements are met	Ch.8 & Spec Sheet	
Check field assembly of the 22CET	Ch.8	
Check field assembly of stand (if used)	Ch.8, Separate Instructions	
Installation		
Make sure 22CET is level	Ch.8	
Check drain line connection	Ch.8	
Check water supply connection	Ch.8	
Leak test water supply lines	Ch.8	
Check electrical line connection	Ch.8	
Perform Operating Tests	Ch.8	

2. Notes

CHAPTER 9 OPERATING TESTS

Operating Tests and Final Checkout Procedure

- **This procedure must be performed by a qualified Cleveland Range authorized service representative.**
- Complete the Startup Procedure before starting the actual operating tests.
- Read and understand all steps of this procedure before starting.
- This procedure evaluates the function of the major operating controls of a SteamChef.
- This procedure is for SteamChefs equipped with a Keypad Control Panel, Dial Timer Control Panel, or an ON/OFF Control Panel.
- NOTE: The ON/OFF control works like the manual operation of the Timer model **EXCEPT** that a selector switch is used to turn the cooking function from Standby Heat (OFF) to the Cooking Mode (ON).

A. Startup Procedure

1. Set the ON/OFF Lever to the OFF position and open the steamer door. There should be no water in the steamer.
2. Make sure that the KleanShield™ and reservoir drains are clear (See Figure 4-1).
3. Check for proper installation of the KleanShield™, fan guard, backplate, slide racks (See Figure 4-2), and door gasket assembly.

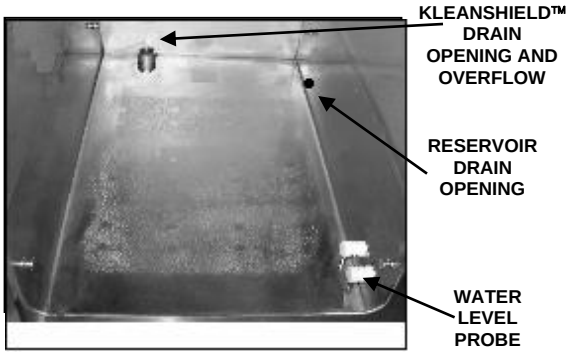

Figure 4-1 Inspecting Compartment drains (SteamChef 6.1 Shown)

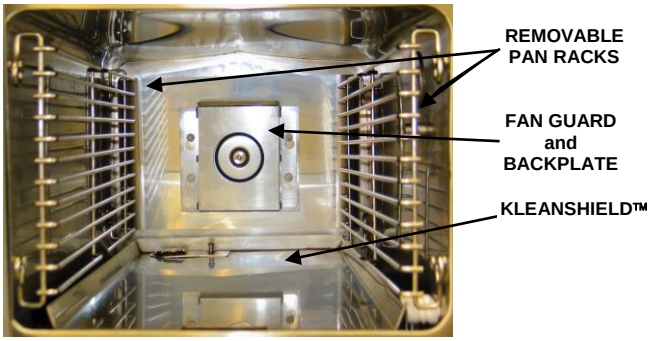

Figure 4-2 Inspecting Compartment Interior Accessories (SteamChef 3.1 Shown)

4. Make sure the Main External Power Switch is OFF.
5. Make sure the fuses or breakers are the proper size.
6. Remove the control side access cover.
7. Check the internal wiring and make sure there are no loose or disconnected wires.
8. Make sure the supply wiring is the correct size.
9. Check that the appliance is properly grounded.
10. Correct any deficiencies.

B. Drain Rinse Inspection (continue from Startup Procedure)

1. Turn OFF the ON/OFF lever/switch.
2. Turn ON the water supply to the steamer.
3. Turn ON the Main External Power Switch.
4. The 3-minute drain rinse cycle starts.
5. The drain is flushed with fresh water.
6. Stop the drain rinse cycle before it is complete by setting the ON/OFF lever to the ON position.
7. Drain rinse stops.
8. The operating control circuits energize.
9. The green Power ON and amber SureCook (Timer Models only) indicators on the control panel light.
10. The reservoir begins to fill with water.
11. Restart the drain rinse cycle by setting the ON/OFF lever to the OFF position.
12. During the drain rinse cycle, make the following checks:
    a. The ON/OFF lever must be turned fully to the OFF position to start the drain rinse cycle.
    b. Look at the one-inch vent gap between the steamer drainpipe and the floor drain.
       A steady stream of water drains from the steamer.
    c. Check for plumbing leaks.
    d. After about 3 minutes, the cycle is complete.
    e. Look at the one-inch vent gap between the steamer drainpipe and the floor drain.
       No more water drains from the steamer.

C. Operating Tests and Final Checkout Procedure (Continue from Drain Rinse Inspection)

1. Set the controls:
    a. Turn ON the Main External Power Switch.
    b. Turn OFF the ON/OFF lever. (Timer Models: The green and amber indicators on the control panel are not lit.)
    c. Set the TIMED/MANUAL switch to TIMED. (ON/OFF models the ON/OFF switch is OFF.)
    d. Set the timer to zero by turning the dial counterclockwise until it points to the 0 mark.
2. Open the cooking compartment door.
3. Turn ON the ON/OFF lever. The reservoir begins to fill with water.
4. As the reservoir fills with water, check that the green Power ON and amber SureCook indicator lights turn ON.
5. Close the compartment door to close the door interlock circuit.
6. As the water level in the compartment reservoir rises:
    a. No water flows from the drain opening.
    b. Check for plumbing leaks in the control compartment.
7. When the water in the reservoir reaches the level of the lower probe, the heating elements and the convection fan turn ON and the steamer heats to the standby temperature.
8. Open the door; the heating elements and convection fan turn OFF.
    a. The water level in the reservoir continues to rise.
    b. The water in the reservoir stops rising when water reaches the upper probe.
        - If the water level continues to rise above the tip of the higher probe, turn OFF the ON/OFF lever and see the Operators Troubleshooting Guide.

- If the problem persists, shut down the appliance and call a qualified Cleveland Range authorized service representative.

9. Close the compartment door.
   a. The door interlock circuit closes.
   b. The heating elements and the convection fan turn ON.
   c. The cooking compartment heats until the standby temperature is reached.
   d. When the standby heat temperature is reached, the SureCook indicator light, the convection fan, and the heating elements turn OFF.
   e. Leave the steamer in timed mode for a few minutes.
      - The SureCook indicator light, heating elements and convection fan cycle ON and OFF as the controls maintain the standby temperature in the cooking compartment.
10. Set the TIMED/MANUAL switch to MANUAL, or for ON/OFF Models turn the switch ON.
    a. The steaming cycle starts.
    b. Check the following functions:
       1) The heating elements and convection fan turn ON.
       2) The water heats to steam.
       3) After a few minutes, the cooking compartment reaches steaming temperature.
       4) The heating elements and convection fan will stay ON as long as the steamer remains in manual mode (or ON for ON/OFF models). The condenser water will cycle to maintain a drain temperature below 140°F.
       5) After several minutes of steaming, check for steam leaks around the door gasket.
11. As the appliance continues to steam in Manual Mode, test the no-water/low water safety circuit.
    a. Close the manual water supply valve(s).
    b. When the water level drops below the lower water safety cutoff point (the lower probe). The heating elements, the condenser water flow and convection fan will automatically shutoff, and the production of steam will cease.
    c. Open the manual water supply valve(s).
       - The reservoir refills with water to the safety level and steaming resumes.
12. Set the TIMED/MANUAL switch to TIMED and set the Timer to zero.
    a. The steam generating cycle stops.
    b. The heating elements, condenser, and convection fan turn OFF.
    c. The buzzer sounds for 3 seconds.
    d. Steam production stops and the compartment returns to standby mode.
13. Open the cooking compartment door and allow the compartment to cool for 3 minutes, then close the door and continue testing.
14. Set the TIMED/MANUAL switch to TIMED.
15. Set the Timer for 10 minutes.
16. As soon as the Timer is set, the steam generating cycle starts. This is the same sequence observed in manual mode, except:
    a. The Timer controls the cycle.
    b. The elapsed time to produce steam is shorter because the water in the steam generator and the cooking compartment are already hot.
    c. The cooking compartment returns to Standby temperature after the Timer counts down to zero.

17. After timed operation starts, check the following:
    a. The heating elements and convection fan turn on immediately.
    b. The SureCook indicator light may turn ON depending on compartment temperature.
        - The SureCook indicator remains ON until the compartment reaches the minimum cooking temperature.
    c. When the SureCook indicator turns OFF, the Timer begins counting down to zero and the condenser cycles as needed.
    d. As steam is generated, the water level fluctuates and the solenoid makes a clicking sound when it opens and closes the fill valve.
    e. Check for steam leaks around the door.
    f. When the timer counts down to zero, the heating elements, the condenser flow and convection fan turn OFF, and the buzzer sounds for 3 seconds.
    g. After about 30 seconds steam stops being produced.
18. Go to step D, “Shutdown.”

D. Shutdown (Continue from Operating Tests and Final Checkout Procedure)

1. Turn the steamer OFF by turning the ON/OFF lever/switch counterclockwise to the OFF position.
    a. The green Power ON indicator light turns OFF.
    b. The 3-minute automatic drain rinse cycle starts.
2. When the drain rinse is complete, turn the steamer OFF at the main external power switch.
3. Replace the side panels and secure them with their screws.
4. After completing the Startup, Drain Rinse Inspection, and the Operating Tests and Final Checkout Procedure, the appliance is ready for service.

CHAPTER 10 PREVENTATIVE MAINTENANCE

A. MAINTENANCE

Maintenance on the steamer must be performed on a regular basis to keep it running properly and efficiently. By following the maintenance instructions in this chapter and cleaning the equipment regularly as outlined in Chapter 6, problems with the steamer will be kept to a minimum. The frequency of steamer maintenance may need to be increased, depending on equipment usage and water quality. If problems occur, refer to the Troubleshooting Guide. For more information on product and services, contact your sales representative.

1. Maintenance Records

Make a file for maintenance and repair records only. Keep a written record of daily, weekly, monthly, and yearly maintenance. These records will help protect warranty coverage, help schedule maintenance procedures, help keep the SteamChef cooking properly, and assist service personnel.

2. Daily Maintenance

a. Checking and Changing the Water

When using the SteamChef Steamer frequently check the water, especially if cooking with perforated pans. Although most food drippings will be caught by the KleanShield™, the water may become dirty from spills falling over the edge of pans when loading, cooking, and emptying the steamer. Change the water (see below) when the water becomes cloudy or contaminated with food particles.

- **CHANGE THE WATER IN THE STEAMCHEF STEAMER AT LEAST EVERY DAY IN ORDER TO MAINTAIN FOOD QUALITY AND KEEP THE STEAMER SANITARY**.

Note: It may be necessary to change the water several times a shift, especially if cooking strong-flavored foods or using perforated pans.

b. To Change the Water in the Reservoir:

1) Turn the ON/OFF lever counter-clockwise (up) so that the white reference marker on the lever is pointing directly left to turn the power OFF, de-energize all controls, and drain the steamer. Wait 3 minutes to allow drain cycle to complete.
2) Open the steamer door and allow steamer to cool.
3) Remove the KleanShield™. Remove any food particles and rinse the KleanShield™ with clean water.
4) Remove any spilled food from inside compartment and rinse any residue from the drain valve and the KleanShield™ drain.
5) Replace the KleanShield™. See Chapter 3.
6) Turn ON power to the steamer by turning the drain valve lever clockwise (down) to close the drain (see Figure 3-8). The power ON indicator will light. The steamer will automatically begin filling with water to the normal operating level.
7) Close the door. The “SureCook” indicator will light (timer models only), and the steamer will begin to automatically heat the water supply to the standby cooking temperature.
8) When the “SureCook” indicator light turns OFF (timer models only) the Steamer is ready to begin cooking.

c. Clean the Steamer

Clean interior and exterior of the steamer according to the Shutdown and Cleaning Instructions in Chapter 6 at least once a day or at the end of each shift.

3. Yearly Maintenance – Clean the Water Strainers (Filter Washers)

Clean the water line strainers at least once a year.

NOTE: When the steamer is first installed, check the strainer more frequently to find out how often the strainer must be cleaned.

a. Turn OFF power to the steamer at the Main External Power Switch.
b. Close the valves in the steamer water supply lines.
c. Unscrew the hoses from the inlet fittings located on the rear of the steamer.
d. Remove the filter washers (See Figure 2-2 and 7-1) from the outlet of the hoses and wash them with clean water.
e. Check the filter washer for wear and replace it if necessary.
f. Put the filter washers into each of the water inlets and reconnect the hoses to the back of the steamer.
g. If treated water is used to supply water to the reservoir, make sure that it is connected to the left inlet at the rear of the steamer. (See Figure 2-2.)
h. Open water supply valve(s) and check for water leaks.
i. Turn power back on to the steamer at the Main External Power Switch.

   NOTE: The appliance will perform the automatic 3-minute drain rinse cycle

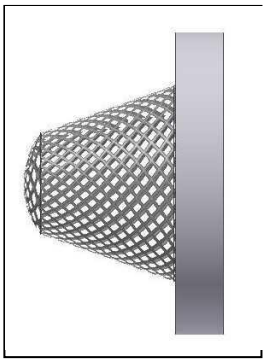

Figure 7-1 Filter Washer Assembly (P/N 110987)

B. Descale the Water Reservoir

NOTICE: Only qualified Cleveland Range authorized technicians or trained onsite maintenance personnel may perform this procedure.

1. Is Descaling Necessary?
   a. Although, a SteamChef should not normally require this procedure, the use of “hard” water or failure to follow the cleaning procedures in Chapter 6 may cause the accumulation of scale in the SteamChef.
   b. Scale can deposit in the bottom of the SteamChef reservoir and/or in its drain. Descaling can help prevent a costly service call if scale buildup begins to impair the SteamChef’s operation.
   c. Descaling is not normally required on a SteamChef. Frequency will depend on water quality, and the frequency of shutdown and cleaning of the water reservoir as described in Chapter 6.
   d. The frequency of descaling must be determined by the owner and performed by qualified Cleveland Range authorized technicians or trained onsite maintenance personnel.
2. If descaling is necessary, Cleveland Range recommends the use of DISSOLVE® Descaler Solution, Cleveland Range Part No. 106174. No other system of descaling should be used. NOTE: Part No. 106174 is the Part No. for a case (6 1-gallon containers) of DISSOLVE® descaler.
3. Follow the instructions included with the DISSOLVE® Descaler Solution. Call Cleveland Range at 216-481-4900 or 1-800-338-2204 if there are any questions.

4. Descale Procedure

⚠ DANGER!

The liquid solution in Cleveland Range Descaler Solution Part No. 106174 can be harmful if not handled properly. Follow these basic safety rules for handling and using this product. Instructions and warnings on container labels supercede all other warnings and instructions.

Wear protective clothing when mixing or applying chemical cleaners

Wear rubber gloves, and OSHA approved eye protection when descaling

Avoid breathing fumes

If liquid contacts skin: wash with soap and water

If chemical contacts eyes: flush with water and seek medical attention

If chemical is swallowed or ingested: drink 1 or 2 glasses of water and seek medical attention

FAILURE TO DO SO CAN CAUSE DEATH OR INJURY

⚠ WARNING

Descaling procedure is slightly different depending on model. This entire procedure must be read and fully understood as it applies to the model being descaled, before beginning descaling operations.
Failure to do so can cause injury and equipment damage.

⚠ CAUTION

Do not use any other product or method of descaling other than the *DISSOLVE*® Descaler method using Part No. 106174.
Failure to do so can cause injury and equipment damage.

- Cleveland Range recommends DISSOLVE® Descaler Solution, Part No. 106174.
- Use no other system of steamer descaling
- Appropriate warnings and safe handling procedures must be provided to handlers and users
- Instructions and warnings on Dissolve® containers and Material Safety Data Sheets supersede and replace instructions and warnings in this manual
- General precautions: wear rubber gloves, splash goggles and other protective clothing and equipment as necessary. Refer to Dissolve® container labels and Material Safety Data Sheets for information regarding eyewash, first aid, medical treatment, and spill control.

MODEL 22CET3.1 and 22CET6.1, BOILERLESS STEAMER DESCALING PROCEDURE (For *DISSOLVE*® Descaler Solution Part No. 106174)

- The entire procedure must be read and fully understood before beginning descaling.
- This procedure takes about 1 hour 30 minutes to complete.
- Repeat this procedure as needed for heavy scale buildup.
- Regular cleaning of the steamer with vinegar per the instructions found in the Shutdown and Cleaning Instructions may help reduce need for descaling. See Chapter 6.
- Sides, back, and top of steam compartments may be descaled with a vinegar solution and a soft brush. See Chapter 6.

1) Open the door to the cooking compartment.
2) Set the TIMED/MANUAL switch to TIMED **OR** the ON/OFF switch to OFF.
3) Set the ON/OFF lever to the OFF position.
   - The 3-minute drain cycle starts.
4) Remove the Pan Racks and KleanShield™ from inside the steamer.
   - Heavily scaled pan racks and KleenShield™ may be descaled by soaking them in a solution of 1-part Dissolve® and 4 parts water, rinsing thoroughly with cold water, and washing them in a dishwasher.
5) Remove any loose scale from the bottom of the steamer.
6) When the drain cycle is done**,** turn the ON/OFF lever to ON to refill the unit.
7) Do not start the timer.
8) Leave the door open.

NOTE: DO NOT HEAT THE STEAMER DURING DESCALING.

9) While the reservoir is filling with water, pour 1 to 1 ½ quarts (about a third of a 1-gallon bottle) of *DISSOLVE*® descaler solution into the water reservoir.
   - While adding *DISSOLVE*® descaler to the reservoir, pour it in slowly to avoid splashing the liquid or overflowing the reservoir.
10) After automatic fill ends, turn OFF the Main External Power Switch. See Figure 3-1.
11) Leave the door open and let the *DISSOLVE*® work for 1 hour.
12) At the end of 1 hour, set the ON/OFF lever to the OFF position.
13) Turn the power ON at the Main External Power Switch.
14) After the 3-minute drain cycle completes, turn the ON/OFF lever back ON. (NOTE: If the reservoir does not fill, dry off the water probe assembly).
15) After filling stops, add 1/2 gallon of water to the reservoir. Do not overflow the reservoir.
16) Turn the ON/OFF lever OFF to start the drain cycle.
17) After the reservoir drains, set the ON/OFF lever to the ON position to refill the reservoir.
18) Close the cooking compartment door and set the timer for 20 minutes. The steamer heats to normal operating temperature.
19) After 20 minutes turn OFF ON/OFF controls and turn the ON/OFF lever to OFF.
20) The 3-minute drain cycle starts.
    - This is the final rinse of the reservoir.
21) If the reservoir drains slowly even after being descaled, turn OFF the steamer and clean the drains with a NSF approved drain cleaner.
22) Once the scale is removed and the drain flows freely, the steamer is ready for normal operation.

CHAPTER 11 TROUBLESHOOTING GUIDE

The Troubleshooting Guide is a list of symptoms of problems that may occur during routine operation.

- “Problem” (left column) lists common operating problems.
- “Possible Cause” (center column) lists causes of problems in the order they should be checked.
- “Remedy / Reference” (right column) lists fixes for problems from easiest to hardest.
- “Notes” in “Remedy / Reference column are at end of the Troubleshooting Guide.

ATTEMPTING TO REPAIR OR CORRECT PROBLEMS REQUIRING A QUALIFIED CLEVELAND RANGE AUTHORIZED SERVICE REPRESENTATIVE VOIDS THE WARRANTY

Trouble Shooting Guide

PROBLEM	POSSIBLE CAUSE	REMEDY/REFERENCE
Power indicator light does not turn ON when ON/OFF lever is in the ON position.	Power turned OFF at Main External Power Switch.	Turn ON power at Main External Power Switch.
	ON/OFF lever not fully turned to the ON position.	Turn lever to the ON position.
	Inoperative controls or indicators.	See Note 1
Power ON and appliance does not fill with water.	Water supply to appliance shut OFF.	Open water supply lines.
	Water line strainer and/or external filter system clogged.	Clean water supply strainer and/or filter system. See Yearly Maintenance.
	Water sensor is grounded by detergent film, or scale.	Clean water sensor assembly with vinegar solution. See Chapter 6.
	Inoperative controls or solenoids.	See Notes 1 and 5.
Control panel Power indicator is on, buzzer sounds continuously, Reset indicator is lit.	High limit has been tripped.	Reset steamer. If problem repeats, see Note1.
	Inoperative controls.	See Note 1.
Compartment bottom dirty with food drippings.	KleanShield™ not installed.	Install KleanShield™.
	Juices and/or food leaking from pans or spilling during loading and unloading.	Put a solid pan under perforated pans to catch drippings. Put less food in pans.
Control panel Power indicator light ON and steamer does not heat to cooking temperature or produce steam.	Door interlock switch not engaged.	Close door completely.
	Water supply to steamer closed.	Open water supply lines.
	Water line strainer and/or external filter system clogged.	Clean water supply strainer and/or filter system. See Yearly Maintenance.
	Appliance is in the Timed Mode and timer is not set (Dial timer models only.)	Change to manual mode or set the timer.
	High limit switch has tripped.	Reset steamer. See Chapter 3. If condition repeats, see Note 1.
	Bottom of reservoir is heavily scaled.	See Note 1 or 9.
	Inoperative controls.	See Note 1.
Abnormal amount of steam coming from drain during draining of steamer. (Continued)	ON/OFF lever/switch is not fully OFF.	Turn lever/switch to OFF to activate the drain cooling feature.
	Water line strainer and/or external filter system clogged.	Clean water supply strainer and filter system.

Continued Next Page

Trouble Shooting Guide
(Continued)

(Continued) Abnormal amount of steam coming from drain during draining of steamer.	Hot water instead of cold water connected to reservoir fill line	See Note 2 and 3.
	Inoperative controls.	See Note 1.
Steam and/or water draining around the compartment door. **See Warning under Note 7.**	The vent, the drain to the vent, and/or the KleanShield™ opening is clogged or covered.	Clear vent and collector openings (Figure 2-2, 3-2). Clean the drain with NSF approved drain cleaner and flush drain thoroughly with fresh water If condition persists see Note 1.
	Water Sensor dirty	Clean sensor thoroughly
	Door gasket or door parts worn.	See Note 1.
	Hot water instead of cold water connected to the condenser water line	See Note 2 and 3.
	External drain or vent not properly sized, installed, free air vented, and/or pitched down.	Make sure the drain is sized and installed properly. See Installation Manual. See Notes 2 and 3.
	Steamer not level.	See Note 2.
	Drain is blocked.	Clean drain with NSF approved drain cleaner. If problem persists see Note 1.
	Inoperative controls	See Note 1.
Steam coming out of the exhaust.	A small amount of steam may issue from the exhaust whenever the unit is in the cooking mode.	This is normal operation of the steamer **NO** action is necessary.
	Condenser water supply is turned OFF	Turn ON Condenser water supply
	Water line strainer and/or external filter system clogged.	Clean water supply strainer and/or filter system.
	Hot water instead of cold water connected to condenser supply line	See Note 2 and 3.
	Inoperative controls.	See Note 1.
Abnormal amount of steam coming from drain or vent.	Condenser water supply is turned OFF	Turn ON condenser water supply
	Hot water instead of cold water connected to the condenser water line	See Note 2 and 3.
	Condenser water line strainer clogged.	Clean water supply strainer. See Yearly Maintenance.
	Inoperative controls	See Note 1
Food takes too long to cook. **To verify the steamers proper operation see Note 8.**	Pans too close to the bottom of cabinet.	Put pans in racks near top of cabinet.
	Compartment overloaded with too much food.	Put less food into pan. Use fewer pans.
	Suggested cooking times are usually listed for cooking at sea level.	Extend cooking times for altitudes above 2500 feet.
	Convection fan inoperative	See Note 1.
	Bottom of steamer is scaled.	See Note 9
	Voltage too low for unit.	See Note 4.
	Inoperative controls.	See Note 1.

TROUBLESHOOTING NOTES

1. If the problem is inside the appliance, call a qualified Cleveland Range authorized service representative or Cleveland Range. (Please have the model number and serial number ready when calling.) Cleveland Range will not pay for warranty repairs by unauthorized maintenance and repair centers.
2. Proper installation of the appliance is the responsibility of the Owner-User. Refer to the Warranty.
3. Repairs to external plumbing must be done by a Licensed Plumber.
4. Repairs to external wiring must be done by a Licensed Electrician.
5. If the automatic fill system fails for any reason, the steamer will stop heating when the water level drops below the minimum operating level. The steamer can be operated by manually filling the water reservoir with about a gallon of water approximately every half-hour, until service can be performed.
6. For more information on products and services, contact your nearest Authorized Sales Representative. Call the factory for a preventative maintenance program, descaling information, and water treatment systems.
7. Whenever opening door, especially when water or steam is leaking around the gasket, heed the warning below.

⚠WARNING

BURN, SCALD AND EQUIPMENT DAMAGE HAZARD

If the drain is blocked, hot water can fill the cooking compartment and spill out when the cooking compartment door is opened.
Signs of blocked drains include steam or water leaks around the cooking compartment door, and reduced cooking performance.
To help avoid injury:

- Stand on the hinge side and away from the appliance and slowly open the cooking compartment door.
- Inspect the drain(s) before each use and clean them if needed.

Failure to follow these precautions can cause burns, scalds, and equipment damage.

8. Use the Egg Test to evaluate steamer performance.
   - NOTE: this test is not valid for pressure steamers.
     1) Turn on the steamer and set the selector switch to the manual mode (or for ON/OFF models set the selector to the ON position) so that steam is produced.
     2) Preheat the steamer for ten minutes.
     3) After the compartment is preheated, place a fresh egg on a perforated steam table pan in the middle of the cavity.
     4) Close the door and set the timer as directed by the size chart below

Egg Size	Time
Medium	12 minutes
Large	14 minutes
Extra Large	14 minutes

     5) Carefully remove the egg and place in a container with cold water running over it.
     6) Let cool under cold running water for 5 minutes.
     7) After cooling, crack eggshell and peel.
     8) A properly operating steamer produces a perfect hard-boiled egg.
9. Although, a SteamChef Steamer normally should not require descaling, the use of extremely “hard” water or failure to follow the cleaning procedures in the Shutdown and Cleaning Instructions may cause scale buildup. Have Cleveland Range authorized technicians or trained onsite maintenance personnel descale the steamer.

Every new piece of Welbilt Foodservice equipment comes with KitchenCare® and you choose the level of service that meets your operational needs from one restaurant to multiple locations

StarCare – Warranty & lifetime service, certified OEM parts, global parts inventory, performance audited

ExtraCare — CareCode, 24/7 Support, online/mobile product information

LifeCare – Install & equipment orientation, planned maintenance, KitchenConnect™, MenuConnect®

Talk with KitchenCare® • 1-844-724-CARE • www.mtwkitchencare.com

WELBILT KitchenCare

To learn how Welbilt Foodservice and its leading brands can equip you, visit our global web site at www.welbilt.com, then discover the regional or local resources available to you.

©2016 Welbilt Foodservice except where explicitly stated otherwise. All rights reserved. Continuing product improvement may necessitate change of specifiations without notice.

Commercial Kitchen Equipment Parts

Find more Cleveland equipment resources at

parthubz.com/equipment/cleveland

Need parts or service?

Call 833-700-8006

support@parthubz.com

parthubz.com