Commercial Kitchen Equipment Parts

CLEVELAND 24CEA10

Cleveland 24CEA10 document

Provided by PartHubz

parthubz.com

833-700-8006 | support@parthubz.com

Visit www.clevelandrange.com to locate a service or sales representative in your area.

Cleveland

SteamCraft

Electric Convection Steamer with Easy Timer

Operation, Installation & Maintenance Manual

This manual is updated as new information and models are released. Visit our website for the latest manual.

MODEL:

24CEA10.2

For your future reference.

Model # _____

Serial # _____

Read the manual thoroughly. Improper installation, operation or maintenance can cause property damage, injury, or death.

Part # KE004032-2 Rev F
February 2024

STATEMENT OF RESPONSIBILITIES / DÉCLARATION DES RESPONSABILITÉS / DECLARACIÓN DE RESPONSABILIDADES

This document is for use by experienced and trained Qualified Cleveland Range, LLC Authorized Service Representatives who are familiar with both the safety procedures, and equipment they service. Cleveland Range, LLC assumes no liability for any death, injury, equipment damage, or property damage resulting from use of, improper use of, or failure to use the information contained in this document. Cleveland Range, LLC has made every effort to provide accurate information in this document but cannot guarantee that this document does not contain unintentional errors and omissions.

The information in this document may be subject to technical and technological changes, revisions, or updates. Cleveland Range, LLC assumes no liability or responsibility regarding errata, changes, revisions, or updates.

Qualified Cleveland Range, LLC Authorized Service Representatives are obligated to follow industry standard safety procedures, including, but not limited to, OSHA regulations, and disconnect / lock out / tag out procedures for all utilities including steam, and disconnect / lock out / tag out procedures for gas, electric, and steam powered equipment and / or appliances.

All utilities (gas, electric, water and steam) should be turned OFF to the equipment and locked out of operation according to OSHA approved practices during any servicing of Cleveland Range equipment.

Qualified Cleveland Range, LLC Authorized Service Representatives are obligated to maintain up-to-date knowledge, skills, materials, and equipment.

Ce document est destiné à l'usage des Représentants de Service qualifiés et autorisés de Cleveland Range, LLC qui possèdent l'expérience et la formation ainsi que la bonne connaissance des mesures de sécurité et du matériel qu'ils entretiennent.

Cleveland Range, LLC décline toute responsabilité pour tout cas de décès, blessure, dommage matériel ou dommage aux biens résultant de l'utilisation, de la mauvaise utilisation ou du manquement d'utilisation des renseignements contenus dans ce document.

Cleveland Range, LLC s'est efforcé à fournir des renseignements précis dans ce document mais ne peut garantir que ce document soit exempt d'erreurs et d'omissions non intentionnelles.

Les renseignements contenus dans ce document peuvent être assujettis à des changements techniques et technologiques, des révisions ou des mises à jour.

Cleveland Range, LLC décline toute obligation ou responsabilité concernant les errata, modifications, révisions ou mises à jour.

Les Représentants de Service qualifiés et autorisés de Cleveland Range, LLC sont tenus de se conformer aux mesures de sécurité normalisées de l'industrie, y compris, mais sans s'y limiter, les réglementations de l'OSHA, les procédures de débranchement / verrouillage / étiquetage relatives à tous les services publics, dont l'approvisionnement en vapeur, et les procédures de débranchement / verrouillage / étiquetage relatives aux équipements et/ou appareils fonctionnant au gaz, à l'électricité et à la vapeur.

Au cours de tout entretien d'un appareil Cleveland Range, tous les services publics (gaz, électricité, eau et vapeur) doivent être FERMÉS au niveau de l'appareil et le dispositif de fonctionnement doit être verrouillé suivant les pratiques approuvées de l'OSHA.

Les Représentants de Service qualifiés et autorisés de Cleveland Range, LLC sont tenus d'actualiser en permanence leurs connaissances, compétences, matériel et équipement.

Este documento está destinado para el uso de los Representantes de Servicio calificados y autorizados de Cleveland Range, LLC quienes cuentan con la experiencia y la capacitación, así como el buen conocimiento de las medidas de seguridad y de los equipos que mantienen.

Cleveland Range, LLC, declina toda responsabilidad en caso de cualquier fallecimiento, lesiones, daños al equipo o daños a la propiedad resultantes de la utilización, del uso indebido o de la falta de utilización de la información provista en este documento.

Cleveland Range, LLC se ha esforzado en suministrar información precisa en este documento, pero no puede garantizar que este documento esté exento de errores y de omisiones no intencionales.

La información contenida en este documento podría estar sujeta a cambios técnicos o tecnológicos, revisiones o actualizaciones. Cleveland Range, LLC declina toda obligación o responsabilidad con respecto a erratas, modificaciones, revisiones o actualizaciones.

Los Representantes de Servicio calificados y autorizados de Cleveland Range, LLC tienen la obligación de seguir los procedimientos estándar de seguridad de la industria; los cuales incluyen pero no se limitan a los reglamentos de la OSHA (La Administración de la Seguridad y Salud Ocupacionales), los procedimientos de desconexión, cierre y etiquetado relativos a todos los servicios públicos incluyendo el suministro de vapor y los procedimientos de desconexión, cierre y etiquetado para los equipos y/o aparatos que funcionan a base de gas, electricidad o vapor.

Cuando se esté dando servicio o mantenimiento a un aparato de Cleveland Range, todos los servicios públicos (gas, electricidad, agua y vapor) deben estar APAGADOS para el equipo en cuestión y se debe seguir el procedimiento de cierre de operaciones de acuerdo con las prácticas aprobadas por la OSHA.

Los Representantes de Servicio calificados y autorizados de Cleveland Range, LLC tienen la obligación de actualizar constantemente sus conocimientos, destrezas, materiales y equipamiento.

FOR YOUR SAFETY / POUR VOTRE SÉCURITÉ / PARA SU SEGURIDAD

FOR YOUR SAFETY

Do not store or use gasoline or any other flammable liquids and vapours in the vicinity of this or any other appliance.

WARNING: Improper installation, operation, adjustment, alteration, service, or maintenance can cause property damage, injury or death. Read the installation and operating instructions thoroughly before installing, operating, or servicing this equipment.

Do not spray aerosols in the vicinity of this appliance while it is in operation.

This appliance is not to be used by persons with reduced physical, sensory, or mental capabilities, or lack of experience and knowledge, unless they have been given supervision or instruction concerning use of the appliance by a person responsible for their safety.

This appliance is not for use by children, and they must be supervised not to play with it.

Retain this manual for your reference.

POUR VOTRE SÉCURITÉ

Ne pas entreposer ou utiliser d'essence ou d'autres liquides ou vapeurs inflammables à proximité de cet appareil ou de tout autre appareil.

AVERTISSEMENT : Toute mauvaise pratique en matière d'installation, de fonctionnement, de réglage, de modification, d'entretien ou de maintenance peut causer des dommages matériels, des blessures ou la mort. Lisez la totalité des instructions d'installation et d'utilisation avant d'installer, d'utiliser ou d'entretenir cet équipement.

Ne pas pulvériser des aérosols dans le voisinage de cet appareil alors qu'il est en fonctionnement.

Cet appareil ne doit pas être utilisé par des personnes dont les capacités physiques, sensorielles ou mentales sont réduites, ou des personnes dénuées d'expérience ou de connaissance, sauf si elles ont pu bénéficier, par l'intermédiaire d'une personne responsable de leur sécurité, d'une surveillance ou d'instructions préalables concernant l'utilisation de l'appareil.

Conservez ce manuel pour votre référence.

PARA SU SEGURIDAD

No guarde ni use gasolina o cualesquiera otros líquidos o vapores inflamables en las cercanías de éste o cualquier otro aparato.

ADVERTENCIA: La indebida instalación, operación, ajuste, modificación, servicio o mantenimiento puede ocasionar daños a la propiedad, lesiones o muerte. Lea detenidamente las instrucciones de instalación y de operación antes de instalar, poner a funcionar o dar servicio a este equipo.

No pulverice aerosoles en las proximidades de este aparato mientras está en funcionamiento.

Este aparato no debe ser utilizado por personas con capacidades físicas, sensoriales o mentales reducidas, o que no tengan la experiencia y los conocimientos adecuados, a menos que estas personas hayan recibido supervisión e instrucciones en cuanto al uso del aparato por la persona responsable de la seguridad de ellas.

Guarde este manual para su referencia.

WARNING / AVERTISSEMENT / ADVERTENCIA

Inspect unit daily for proper operation. / Inspecter le bloc quotidiennement pour garantir le fonctionnement normal. / Inspeccione diariamente el funcionamiento correcto de la unidad.

Heavy. / Lourd. / Pesado.

Team or mechanical lift. / Levage en équipe ou mécanique. / Levantamiento en equipo o mecánico.

Surfaces may be extremely hot! Use protective equipment. / Les surfaces peuvent être extrêmement chaudes! Utiliser des équipements de protection. / ¡Las superficies pueden estar muy calientes! Utilice equipo protector.

Do not climb, sit, or stand on equipment. / Il ne faut pas monter, s'asseoir ni se tenir debout sur l'équipement. / No subirse, ni sentarse ni pararse sobre el equipo.

Do not remove guards or operate without them. / Ne pas supprimer les gardes ou fonctionner sans eux. / No retire los guardias ni funcionar sin ellos.

Keep hands away from moving parts and pinch points. / Tenir les mains à l'abri des pièces mobiles et des angles. / Mantenga las manos lejos de las piezas movibles y los puntos de presión.

Hot product and surfaces. / Produit et surfaces chaudes. / Producto y superficies calientes.

Do not touch. / Ne pas toucher. / No la toque.

Keep clear of pressure discharge. / Se tenir hors de portée de la purge des soupapes de surpression. / Manténgase alejado de la descarga de presión.

Unit must be anchored as per manual. / Unité doit être ancrée selon les directives du manuel. / Unidad debe estar fijado según el manual.

Floor may become slippery from product spillage. / Déversement de produit peut causer de plancher à être glissante. / Derrame de producto puede causar piso a ser resbaladizo.

Have a qualified service technician maintain your equipment. / Demandez à un technicien en entretien et en réparation qualifié d'effectuer l'entretien de votre équipement. / Haga que un técnico de servicio calificado mantenga su equipo.

Shut off power at main fuse disconnect prior to servicing. / Couper l'alimentation sur le principal fusible sectionneur avant l'entretien. / Apague la alimentación eléctrica en el fusible desconectador principal antes de darle servicio.

Ensure equipment is at room temperature and pressure gauge is showing zero or less prior to removing any fittings. / S'assurer que le chaudron se trouve dans une température ambiante et que le manomètre affiche zéro ou moins avant de déposer les raccords. / Asegúrese de que la marmita está a temperatura ambiente y el manómetro está mostrando cero o menos antes de quitar cualquier accesorio.

Appliance must <u>not</u> be supplied through an external switching device that is regularly switched on and off. / L'appareil ne doit pas être alimenté par un interrupteur externe régulièrement allumé et éteint. / El aparato no debe ser alimentado a través de un dispositivo de conmutación externo que se encienda y apague periódicamente.

OPERATION, INSTALLATION & MAINTENANCE MANUAL STEAMCRAFT MODEL 24CEA10.2

Table of Contents

CHAPTER 1 GENERAL INFORMATION 5

A. Laws, Codes, and Regulations 5
B. Operational Safety 5
C. Inspection for Shipping Damage 5

CHAPTER 2 PRODUCT INFORMATION 6

A. Product Information 6
B. Model Numbers and Serial Numbers 6
C. Product Information Plate 6
D. Product Views 7

CHAPTER 3 INSTALLATION PROCEDURE 9

A. Select a Location 9
B. Position and Level the Appliance 9
C. Slide Racks (Pan Racks) 10
D. Water Supply Requirements and Installation 10
E. Electric Power Supply 12
F. Free Air Vented Drain Line 12
G. Installation Checklist 14

CHAPTER 4 COOKING WITH THE SteamCraft 15

A. Cooking Procedure 15

CHAPTER 5 EASY TIMER OPERATING INSTRUCTIONS 17

A. Main External Power Switch 18
B. Inspecting the Cooking Compartment 18
C. Power ON (Auto Water Fill / Automatic Preheat) 18
D. Preheat Steamer 19
E. High Limit Reset 19

CHAPTER 6 SHUTDOWN AND CLEANING PROCEDURE 21

A. Steam Generator Blowdown 21
B. Shutdown and Cleaning 21

CHAPTER 7 OPERATING TESTS AND FINAL CHECKOUT PROCEDURES 23

A. Startup Procedure with the Appliance De-Energized 23
B. Generator Drain and Rinse Cycle Inspection (3-minute Blowdown Cycle) 23
C. Operating Test Procedures 24
D. General Information about the Steam Shut Off Switch 24
E. Function Test for the Steam Shut Off Switch 25

CHAPTER 8 PREVENTATIVE MAINTENANCE 26

A. General Information 26
B. Maintenance and Service Records 26
C. Daily Maintenance 26
D. Weekly Maintenance 26
E. Monthly Maintenance 26
F. Yearly Maintenance 29

CHAPTER 9 TROUBLESHOOTING GUDIE 30

CHAPTER 1 GENERAL INFORMATION

A. Laws, Codes, and Regulations

This equipment should be installed only by qualified, professional plumbers, pipe fitters, and electricians.

1. The installation of this appliance must conform with:
   a) The National Electrical Code, ANSI/NFPA 70 (latest edition), or the Canadian Electrical Code, CSA C22.2, or local codes, as applicable.
      - When installed, the appliance must be electrically grounded in accordance with the above.
      - **NOTE:** This appliance is not GFI (GFCI) compatible.
   b) The *Food Code* (latest edition) of the Food and Drug Administration (FDA).
2. This equipment is to be installed to comply with the applicable federal, state, or local plumbing codes.
3. Installation instructions must be read in their entirety before starting installation of this appliance.
4. Install this appliance according to the policies and procedures outlined in this manual.
5. Installation must comply with <u>all</u> local fire and health codes.

⚠ DANGER

Improper installation, adjustment, alteration, service, or maintenance of this appliance, or installation of a damaged appliance can result in DEATH, INJURY, EQUIPMENT DAMAGE, and void the warranty.

NEVER install damaged appliances, equipment, or accessories.

ALWAYS have installation and service performed by qualified Cleveland Range authorized personnel.

B. Operational Safety

The Operational Safety section outlines minimum safety policies and procedures for operating one or more Cleveland Range appliances.

1. Do not store anything on top and underneath the appliance.
2. KEEP THE APPLIANCE AREA FREE AND CLEAR OF COMBUSTIBLES.
3. Proper air supply for ventilation is REQUIRED for and CRITICAL to safe, efficient operation of this appliance.
4. Place non-slip draining anti-fatigue mats rated for use in wet, greasy, or dry work areas on the floor in front of the appliance and other locations as needed. Obtain the best mats for your needs from your local supplier.
5. Wear BOOTS appropriate to the work area to help protect feet, and to help prevent slips and falls.
6. Allow only qualified Cleveland Range authorized service representatives to service the appliance.
7. Use only factory authorized repair parts.
8. Maintain written records of appliance service, maintenance, and repair. See Chapter 8.

⚠ DANGER

Operating this appliance out of level can cause DEATH, INJURY, and EQUIPMENT DAMAGE.

This appliance must be level both front-to-back and side-to-side in all installations.

NEVER operate this appliance out of level.

If this appliance is suspected to be out of level, shut it down at once and call your qualified Cleveland Range authorized service agency immediately.

C. Inspection for Shipping Damage

If the appliance is damaged or damage is suspected:

1. Submit a Damage Claim to the shipper and inform your dealer immediately.
2. Inform Cleveland Range in writing within three (3) days.

CHAPTER 2 PRODUCT INFORMATION

A. Product Information

- This manual covers the operation of 24CEA10.2 SteamCraft Steam Cookers (steamers) and their standard features and options.
- Other than the selection of options, there are presently no significant design, parts, or operating differences among appliances with this model number.
- For further information, contact your Cleveland Range sales representative or Cleveland Range.

B. Model Numbers and Serial Numbers

1. Cleveland Range, LLC assigns two product identification numbers to each appliance: a model number and a serial number.
2. Please provide the model number and serial number when you contact Cleveland Range or a qualified Cleveland Range authorized service representative.
    - Model Number_____

      (Write the Model Number of your appliance here)
    - Serial Number_____

      (Write the Serial Number of your appliance here)

C. Product Information Plate

The Product Information Plate in the left side of the appliance lists:

- Model
- Serial number
- Clearances
- Power and wiring requirements

D. Product Views

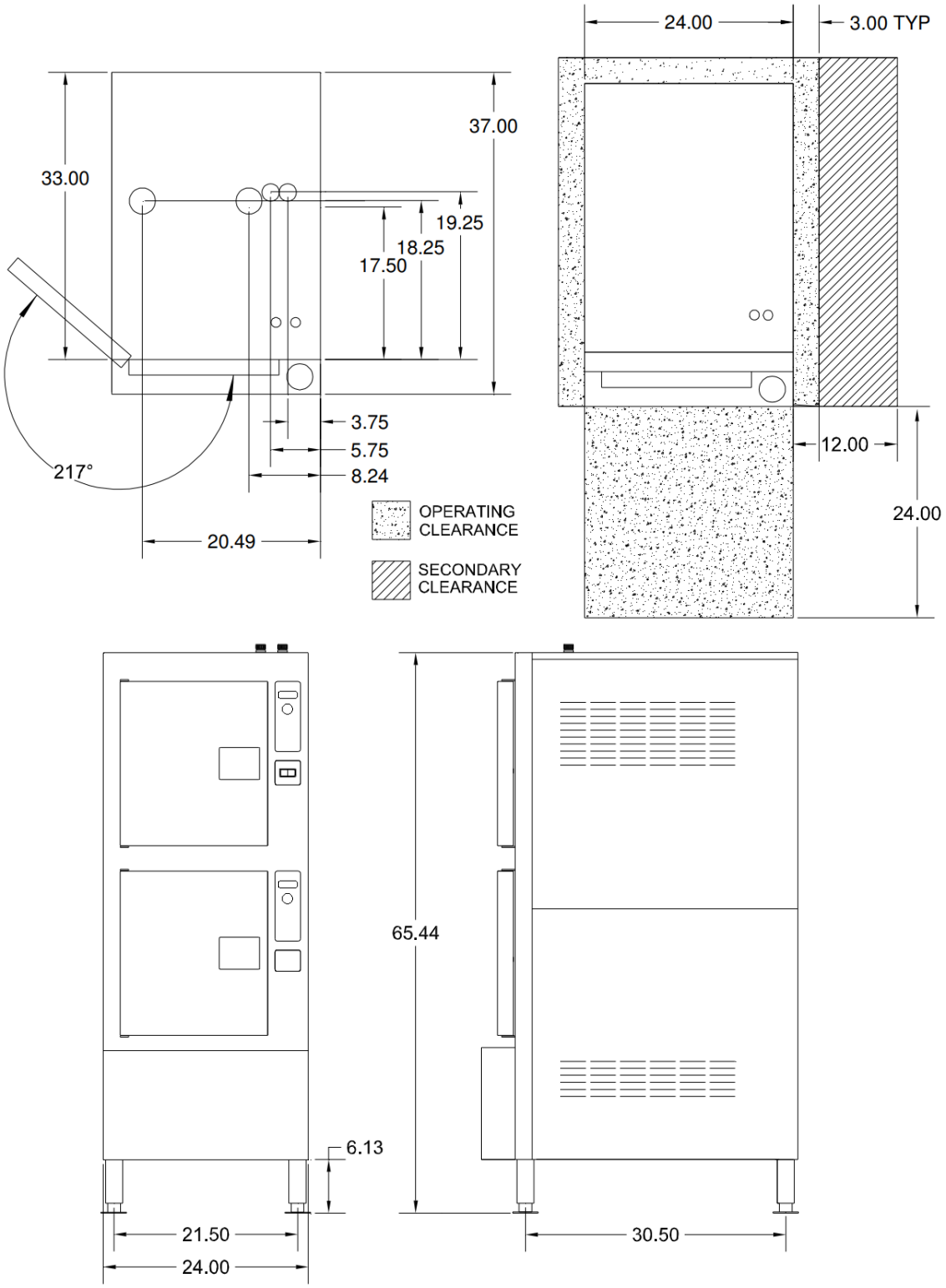

Figure 2-1

24CEA10.2 PRODUCT VIEWS

Plan, Front, and Side Views

Dimensions in Inches

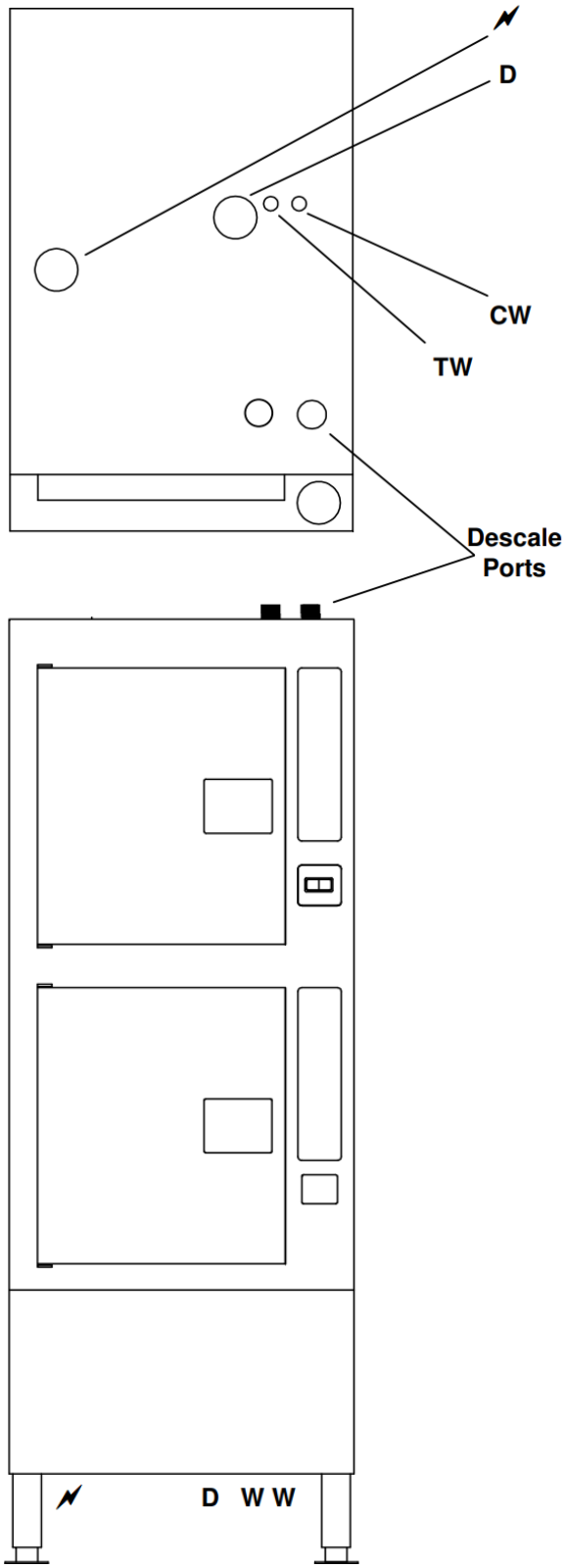

Key to Connections

D	DRAIN CONNECTION, 1 1/2" NPT. This is the connection point for the drain line. NOTE: The drain MUST NOT be located beneath the steamer itself.
CW	COLD WATER, 3/8" NPT
TW	TREATED WATER, 3/8" NPT
⚡	ELECTRICITY

Note: The utility connections are on the bottom of the appliance.

Note: The Descale Port is located on top of the appliance.

Figure 2-2

24CEA10.2

Utility Locations

CHAPTER 3 INSTALLATION PROCEDURE

⚠ DANGER

Operating this appliance out of level can cause DEATH, INJURY, and EQUIPMENT DAMAGE.

This appliance must be level both front-to-back and side-to-side in all installations.

NEVER operate this appliance out of level.

If this appliance is suspected to be out of level, shut it down at once and call your qualified Cleveland Range authorized service agency immediately.

A. Select a Location

For safe and efficient operation:

1. Installation must comply with all local fire and health codes.
2. The location selected must be capable of supporting this appliance.
   - The operating weight of a 24CEA10.2 is 780 pounds.
3. Position the appliance so it will not tip or slide.
4. The operating surface must be level enough to allow leveling with the adjustable legs.

   This appliance **MUST** be level both front to back and side to side before operation.
5. A suitable drain must be available within 12 feet of this appliance. Do NOT install the appliance directly over a drain.
6. The location must include space for Operating and Service/Secondary Clearances and the Exhaust Hood. Refer to Figure 2-1.

⚠ WARNING

All clearance requirements above, below, and around this appliance are the same for non-combustible locations as for combustible locations.

Failure to maintain required clearances and additional distances as needed can result in INJURY and EQUIPMENT DAMAGE.

Consult manufacturers' literature, and sales and service agencies as needed.

7. KEEP THE APPLIANCE AREA FREE AND CLEAR OF COMBUSTIBLES.
8. Proper air supply for ventilation is REQUIRED for and CRITICAL to safe, efficient operation of this appliance.
9. Make sure the air vents of this appliance are not blocked with or by anything.
10. Allow for sufficient extra distance if a "high heat source," e.g. a broiler, is located next to this appliance. Contact Cleveland Range for recommendations.
11. Do NOT install this appliance directly over a drain. Steam rising up out of the drain will adversely affect operation, hamper cooling air circulation, and damage electrical and electronic components.

B. Position and Level the Appliance

1. Move the appliance into position.
2. Place a level along the bottom edge of the appliance.
3. Use the adjustable legs of the appliance to level it front-to-back and side-to-side.

C. Slide Racks (Pan Racks)

1. Refer to Figure 3-1. Each rack has four loops: two top, and two bottom. Hold the slide rack so the ends of the hanger loops are towards compartment wall.
2. Slide one rack into compartment with the loop side closest to the compartment wall and rack slots horizontal.
3. Hook the loops over the top and bottom pins
4. Repeat steps 1, 2, and 3 for the other racks.

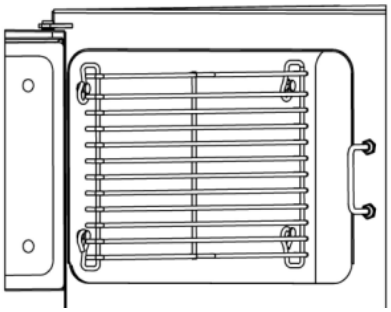

Figure 3-1

Slide Rack Installation

D. Water Supply Requirements and Installation

1. Water Supply Requirements

⚠ CAUTION

Using water not within the limits specified in this manual could void or reduce Cleveland Range's warranty coverage of the steamer.

a) Water Quality

As with any steam generating equipment, poor water quality degrades the performance of the steamer.

Check the quality of supply water as described below before starting construction of the water supply lines. If a water treatment system must be installed to achieve acceptable water quality, install it before connecting the water supply lines to the steamer.

If softened or chlorinated water is used in this steam generator, a carbon type filter must be used for the water before it enters the steamer to remove Chlorine or other salts. If the water supply is treated or softened either by the Water Company or on the premises, it may contain chlorine or various salts. These additives are damaging to the steam generator. Salts and chlorine used to soften or treat water cause rapid scale buildup, and/or increased corrosion if allowed to flow into the steamer.

Contact a local water treatment specialist for an on-the-premises water analysis. The recommended minimum feed water quality requirements for the steamer are listed in Table 3-1.

Table 3-1. Minimum Water Quality Requirements

Scale Forming Factors	
Total Dissolved Solids	less than 60 parts per million
Silica	less than 13 parts per million
Alkalinity	less than 20 parts per million
Corrosion-Causing Factors:	
Free Chlorine	less than 0.5 parts per million
Chloride	less than 30 parts per million
PH factor	greater than 7.5

b) Water Supply System

Provide a water supply system that fulfills the requirements of the limits listed in Table 3-1. The supply must provide a minimum dynamic pressure of 35 psi (2.4 kg/cm^2) and a maximum static pressure of 60 psi (4.1 kg/cm^2).

- If analysis shows that the supply water is NOT within the required limits, either a water treatment system and/or carbon filter must be installed in the line feeding the steam generator or the frequency

of maintenance, cleaning, and descaling must be increased beyond that recommended in the maintenance schedule (Chapter 8).

2. Connect the Water Supply Lines

- The Installer/Owner is responsible for the water connection of this appliance.
- This appliance is to be installed to comply with all applicable federal, state, or local plumbing codes.
- **Connect this appliance to COLD WATER** The condenser system and steam generator will not work properly if they are connected to HOT or WARM water.

a) Water supply must have a minimum dynamic (flow) pressure of 35 psi (2.4 kg/cm²) and a maximum static pressure of 60-psi (4.1 kg/cm²)

b) If the static pressure is above 60 psi, a pressure regulator must be used and set at approximately 50 psi. Pressure above 60 psi can damage solenoid valves. See Figures 3-2 and 3-3.

c) If the supply water meets the requirements shown in the Warranty, then the Single Water Supply Arrangement shown in Figure 3-2 may be used.

1) If using the single water supply arrangement: The supply piping to the tee fitting must be at least the next larger size of pipe than the connection provided on the appliance.

d) If the water supply fails to meet the requirements shown in the Warranty, then use the Separate Feed Water Supply Arrangement shown in Figure 3-3.

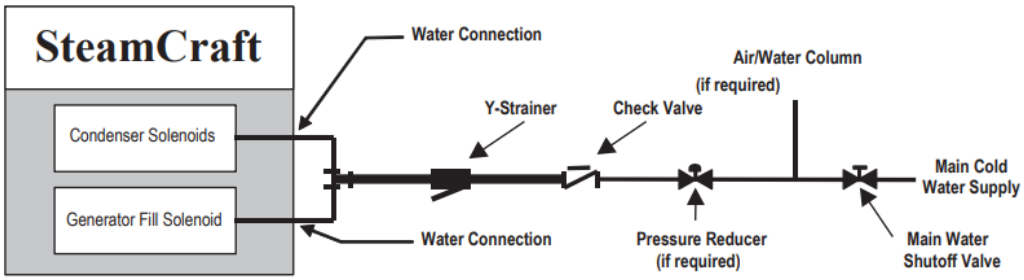

Figure 3-2 Cleveland Range Single Water Supply Arrangement

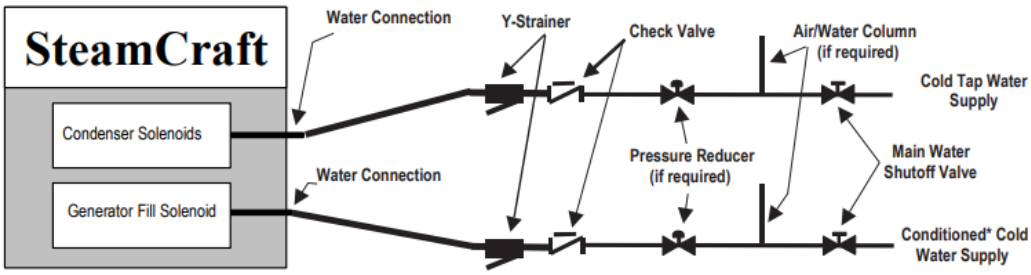

Figure 3-3 Cleveland Range Separate Water Supply Arrangement

*** "Conditioned" indicates water that has been filtered or treated by a Cleveland Range approved method to meet or exceed the water quality standards in the Warranty.**

e) Installation Requirements:

- Apply non-hardening pipe thread sealant to threaded connections.
- The 24CEA10.2 has two 3/8" NPT female fittings its underside: one for the steam generators (treated water) and one for the condenser (cold water). Refer to spec sheet for more details.

- Install a manual water shut-off valve (Main Water Shutoff Valve) (not provided) between the cold water supply line(s) and the appliance.
- The National Sanitation Foundation (NSF) requires installation of a check valve (or other approved anti-backflow / anti-siphon device) (not provided) in all supply lines in accordance with and as required by local, state, and national health, sanitation and plumbing codes.
- When using the Separate Water Supply Arrangement, use two water strainers. Order extra water strainers from Cleveland Range or your Authorized Sales Representative.
- Flush the water supply lines before connecting the lines to the appliance.

3. Test Water Supply Lines

a) Check all connections for proper tightness.
b) Inspect the water connections inside the appliance. (Remove side panels if not already off.)
c) Open the water supply valves.
d) Check all lines and connections for leaks, both inside and outside the appliance.

E. Electric Power Supply

The electrical supply must match the power requirements specified on the steamers rating plate and be made in accordance with the following requirements.

1. The steamer must be grounded and have the electrical power lines installed in accordance with local codes and/or the National Electric Code, ANSI/NFPA No. 70-LATEST EDITION (USA) or the Canadian Electrical Code, CSA C22.2, as applicable. The wiring diagram is located on the back of the lower front panel.
2. Power connection
   - This unit is not suitable for connection to a GFCI (Ground fault Circuit Interrupter).
   - Cleveland Range recommends that the unit be connected to the electrical system, using a flexible conduit system compliant with the applicable codes.
3. A main disconnect switch and a separate fuse or breaker should be installed near the unit as shown in Figure 3-8. Throughout the remainder of this manual the fused disconnect switch is referred to as the main external power switch.
4. Refer to the connection diagrams in Figure 3-9 and connect the wires to the terminal block and ground connector accordingly.

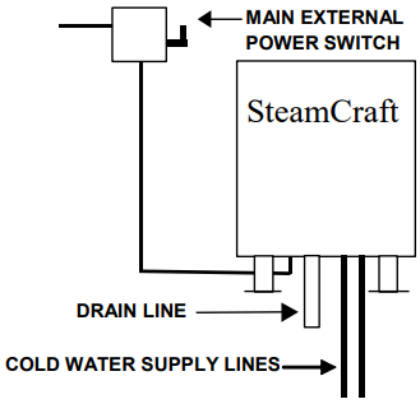

Figure 3-8
Electrical Layout

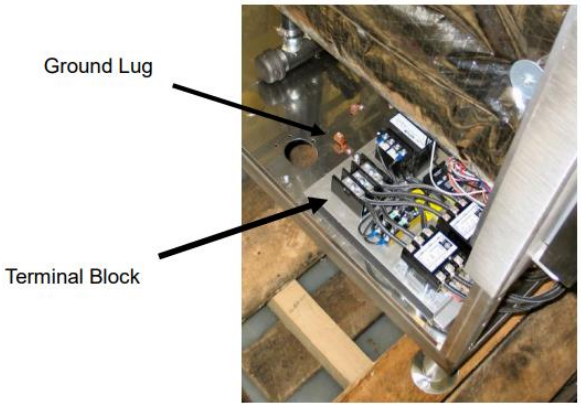

Figure 3-9
Hardwire Connection

F. Free Air Vented Drain Line

⚠ DANGER

DEATH, INJURY, EQUIPMENT and PROPERTY DAMAGE will result from improper installation of drain outlet lines.

Install free air vented drain lines as described in this manual

NOTICE: Furnishing and installing drain lines and drainpipe is the responsibility of the Installer/Owner.

The following restrictions and requirements are critical to the safety of personnel and equipment, and must not be violated under any circumstances:

1. The drain lines must be installed in compliance with the Food Code (latest edition) of the Food and Drug Administration (FDA), and any other applicable national, state, or local codes and regulations.
2. The drain line must be free air vented, have gravity flow from the appliance, and terminate outside the perimeter of the appliance.
3. Free air venting requires a minimum 1" clearance between the end of the drain line and the top of the floor drain. See Figure 3-10.
4. Do NOT install the appliance directly over a drain. Steam rising up out of the drain will adversely affect operation, hamper cooling air circulation, and damage electrical and electronic components.
5. Do NOT connect the appliance's drain connection to any drain material that cannot sustain 180ºF.
6. Do NOT connect any other drain from any other equipment to the drain line of this appliance.
7. Do NOT connect the drain outlet extension line directly into a floor drain or a sewer line.

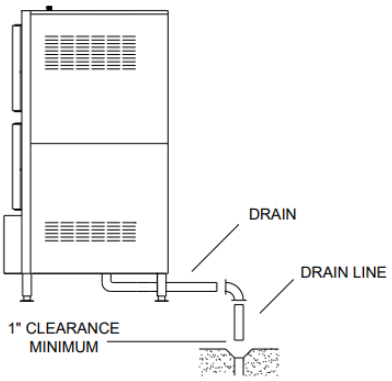

Figure 3-10

Typical Drain Layout

8. Do NOT connect this appliance's drain directly to drains or to the plumbing of any other equipment.
9. Do NOT install a trap or shutoff in the drain line.
10. **Drainpipe Size and Length Guidelines:**
    - **Do NOT make a drainpipe outlet extension more than 12 feet long.**
    - **Do NOT use more than three elbows.**
    - **Up to 6' pipe:** 1 1/2-inch pipe and fittings are acceptable.
    - **Up to 2 elbows:** 1 1/2-inch pipe and fittings are acceptable.
    - **6' to 12' pipe:** 2-inch pipe and fittings are required.
    - **3 elbows on any extension:** 2-inch pipe and fittings are required.
11. Refer to Figures to 2-2 and 3-10. Connect the drain to the appliance.
    a. While assembling the pipes and fittings of the drain outlet extension, use non-hardening pipe thread sealant.
    b. Thread fittings together FINGER TIGHT ONLY! DO NOT USE A WRENCH!

G. Installation Checklist

Installation Checklist		
TASK	**REFERENCE (Chapter)**	**COMPLETED (Initial and Date)**
Preparation		
Check Operating Location Clearances	Chapter 2 Section D	
Test Supply Water Quality	Chapter 3 Section D	
Water Supply Requirements Met	Chapter 3 Section D	
Electric Power Requirements Met	Chapter 3 Section E	
Installation		
Check Level Front-to-Back and Side-to-Side	Chapter 3 Section B	
Check Drain Line Connection	Chapter 3 Section F	
Check Electrical Supply Connection	Chapter 3 Section E	
Check Water Supply Connection	Chapter 3 Section D	
Leak Test Water Supply Lines	Chapter 3 Section D	

Notes:

⚠ DANGER

Do NOT breathe steam, hot air or condensate. DEATH or INJURY will result.

⚠ WARNING

Hot air, steam, and condensate will cause burns and scalds.

To help prevent burns and scalds when opening steamer doors: always stand to the hinge side and back from the doors, slowly open the door, and wait for the steam and heat to dissipate before reaching into the steamer.

The SteamCraft Steamer is a continuously operating appliance, so parts are ALWAYS HOT when the Main External Power Switch or the ON/OFF Switch is in the ON position.

When the ON/OFF Switch is turned to the OFF position, the steamer will remain HOT for some time. Contact with hot surfaces and steam can cause burns and scalds. Avoid contact with hot surfaces and steam.

If the steamer door is stuck shut: DO NOT force the door open.

The door stuck shut may indicate a blocked drain. Hot water can fill the cooking compartment and spill out if the door is forced open causing injury and equipment damage.

If the steamer door is stuck shut:

- Turn OFF the steamer.
- Call a qualified Cleveland Range authorized service technician.
- Wait for the steamer to cool before servicing.

⚠ CAUTION

Some food drips juices. Use a solid catch pan under perforated pans when cooking food that drips juices. Dripping juices can cause burns and clog the drain.

Do NOT use oven racks that are bent or damaged in any way.

DO insert pans and accessories LEVEL and INSIDE the oven racks.

Pans and accessories placed in damaged or out of level racks, or outside racks can tip and spill, causing burns, injuries and/or equipment damage.

A. Cooking Procedure

1. Before Cooking
   a. Inspect and clean the drain and cooking compartment as required.
   b. If necessary, preheat the cooking compartment.
   c. Slide the pans of food into the slide racks inside the steamer. Do not place pans or anything else on the bottom of the compartment.
      - For the best cooking results, use shallow, 2-1/2-inch-deep, perforated pans without covers. These give the best heat transfer and shortest cooking time.
   d. Close the steamer door.
2. Refer to **Easy Timer Operating Instructions** in Chapter 5 to start cooking.
   - While cooking, occasionally check the water in the reservoir for food particles and oils. If the water is dirty or cloudy, change the water. See Chapter 8.

- The steamer compartment of the steamer is equipped with an **automatic door interlock switch** that turns off the heating elements and shuts off the convection fan and condenser when the door to the compartment is opened.

⚠ WARNING

BURN and **SCALD HAZARD**

Even though the heat shuts off as soon as the door is opened, it may take up to a minute for production of steam to end and residual steam in the system to clear from the cooking compartment.

To help avoid injury, always wait until the residual steam clears and the convection fan stops before reaching into the cooking compartment, and always wear dry heatproof gloves when reaching into the cooking compartment. Wet or damp gloves conduct heat and can cause burns when touching hot items.

3. After Cooking

- Carefully open the cooking compartment door and remove the pans from slide racks.
- If the steamer will be used again in a few minutes, shut the door to maintain the cooking compartment temperature.
- If another use is not planned for more than half an hour, leave the cooking compartment door slightly open to reduce internal pressure while the steam condenses and the compartment cools.
- If the steamer is not being used again during this shift, perform the Power OFF and Shut Down and Cleaning Procedures, found in Chapter 6.

CHAPTER 5 EASY TIMER OPERATING INSTRUCTIONS

DIGITAL DISPLAY

CONTROL KNOB

Enabled with **TIMED** mode

TIMER START/STOP BUTTON in **TIMED** mode

TIMED/MANUAL SWITCH BUTTON

(Press for 5 sec)

ON-OFF SWITCH

⚠ CAUTION

Press switch and button with fingertips only.

INJURY and EQUIPMENT DAMAGE can result from pressing switches and buttons with anything else.

A. Main External Power Switch

Usually, the Main External Power Switch is left ON.

To turn ON the Main External Power Switch:

- Turn the ON/OFF switch to the OFF position.
- Turn ON the Main External Power Switch. See Figure 5-1.

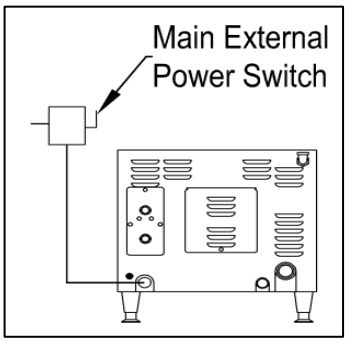

Figure 5-1

Main External Power Switch

B. Inspecting the Cooking Compartment

At the back of the cooking compartment, a drain screen covers the drain (Refer to Figure 5-2). The screen prevents large food particles from entering and blocking the drain line. Any blockage of the drain line or screen can reduce drainage from the cooking compartment resulting in reduced cooking performance, equipment damage, and a hazard to the operator. A blocked or slow drain may cause:

- Hot water to collect in the compartment and spill out when the compartment door opens.
- Pressure fluctuations in the compartment, resulting in steam leaks around the door gasket, or compartment implosion.
- Reduced convection in the compartment, reducing cooking performance.

⚠ CAUTION

Steam leaks around the door, cooking compartment flooding, reduced cooking performance, and compartment implosion can be caused by a blocked drain or drain screen. Inspect and clean the drain and drain screen before each use.

Before every steaming operation, inspect the cooking compartment and remove any food scraps or debris from the racks, walls, and floor of the compartment. Pay attention to the drain and drain screen.

1. DO NOT USE the steamer if water stands in the drain opening. Arrangements must be made immediately to clean the drain in accordance with the instructions found in the **Preventative Maintenance** and **Troubleshooting** section of this manual.
2. Remove any food or debris that is blocking the drain or screen.
3. Be sure the screen covers the drain. The screen prevents large pieces of food from entering and blocking the drain.

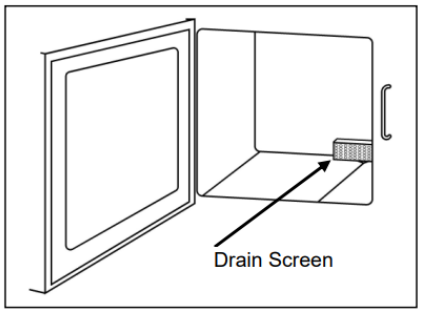

Figure 5-2

Compartment Drain Screen

C. Power ON (Auto Water Fill / Automatic Preheat)

1. Open the water supply valves to the steamer.
2. Turn ON power to the steamer by turning on the ON-OFF SWITCH. The digital display lights and the water reservoir fills.
3. Switch to TIMED mode and set the timer to 10:00 and press the “TIMER-START/STOP” button.
4. Close the door. When the water reservoir is filled to the minimum operating level the heater turns on and heats the water to the standby cooking temperature.
5. Timed Mode (with “SURE COOK” mode feature)
   a) Select cooking time using “Control Knob”.
   b) Press “TIMER-START/STOP” button to start cooking.
   c) “SURE COOK” illuminates on digital display once the compartment reaches 193°F (90°C).
   d) Timer then starts to countdown until it reaches 00:00.
   e) Steamer will stop heating and require prompt when the timer reaches 0:00.

6. Manual Mode (Continuous Steaming)
   a) Press and hold “TIMER-START STOP” button for 5 seconds until switches to Manual mode.
   b) “MAN” will appear on the digital display when activated and control knob disabled.
   c) **NOTE:** steamer will go into “Standby” mode if compartment isn’t opened for 60 minutes.
7. Changing from Manual to Timed Mode
   a) Press and hold “TIMER-START/STOP” button for 5 seconds until switching to TIMED mode.
   b) “TIMED” will appear on the digital display.
   c) Digital display will display 00:00, and the control knob will be activated.
8. “Descale” Notification
   a) Easy Timer comes with 400 hours operation for “Descaling Notification.”
   b) After 400 hours, “DESCALE” appears on digital display for 5 seconds and will re-appear every 5 minutes.
9. Reset and Clear Descale Notification
   a) Turn OFF main power with POWER SWITCH.
   b) Press and hold the “TIMER-START/STOP” button.
   c) Power unit ON with main POWER SWITCH (with “TIMER START/STOP” Button held).
   d) Wait 10 seconds to Reset/Clearing Mode.
   e) The Beeper starts beeping once every second.
   f) Release the “TIMER-START/STOP” button.
   g) Display will show “RST”.
   h) Press the “TIMER-START/STOP” button to confirm resetting descale notification.
10. Program Number of Hours until Descale Notification
    a) Turn OFF main power with POWER SWITCH.
    b) Press and hold the “TIMER-START/STOP” Button.
    c) Power unit ON with main POWER SWITCH (with “TIMER START/STOP” button held).
    d) Wait 20 seconds to enter Programming Mode (to change the Max number of hours)
    e) The Beeper starts beeping twice every second.
    f) Release the “TIMER-START/STOP” button.
    g) Display will show past settings.
    h) Turn knob to adjust the number of hours.
    i) Press “TIMER-START/STOP” button to save number of hours for next descale notification.

D. Preheat Steamer

Preheat steamer to ensure productivity and consistency. **BEFORE PREHEATING**: Inspect and clean the compartment. After preheating, the compartment will be too hot to inspect and clean safely.

To preheat the steamer:

1. Close the steamer door and turn the steamer ON 15 minutes before cooking.
2. The steamer will heat to the standby temperature.

E. High Limit Reset

This steamer has a high limit lockout to protect the unit from overheating.

If the high limit lockout temperature is reached:

1. The RESET light will turn ON.

2. A buzzer will sound continuously.
3. The heater will shut OFF.
4. The steamer must be reset before cooking can continue.

To reset the high limit:

1. Turn OFF power to the steamer with the ON/OFF switch.
2. Wait 15 minutes for the steamer to cool.
3. Make sure the water probes are clean.
4. Refill with water and restart according to the Power ON instructions (Chapter 5).
5. If the problem repeats, see the **Operators Troubleshooting Guide** (Chapter 9).

CHAPTER 6 SHUTDOWN AND CLEANING PROCEDURE

A. Steam Generator Blowdown

1. Power Off (Automatic Blowdown)

   Blowdown occurs automatically when each steamer compartment is turned OFF at its ON/OFF switch. During blowdown, the steam generator drain valve is rinsed with fresh water, and the boiler is drained. Blowdown at frequent intervals helps decrease mineral buildup in the steam generators and reduces the frequency of descaling and other maintenance.

2. Blowdown Frequency

   The supply water quality determines how often blowdown must be performed. The more the steamer is used and the higher the content of total dissolved solids and particulates in the feed water, the more frequently blowdown must be performed. A determination should be made at the time of installation whether additional blowdown frequency will be required as part of the daily maintenance based on the water quality analysis done as part of the installation. This information should be noted in the daily maintenance program developed for the equipment. After it has been determined whether the local water supply meets the minimum supply water quality standards, observe the following guidelines to establish proper blowdown scheduling.

   - When using a supply water system that does not meet the minimum supply water quality standards, blowdown must be performed after every 4 hours of operation and at the end of each shift.
   - For units using water that meets the minimum supply water quality standard, whether naturally or by using a water treatment system, blowdown must be performed at the end of each shift.

3. Blowdown Procedure

   When each steamer is turned OFF, its blowdown cycle starts and runs automatically. The complete cycle takes approximately 3 minutes.

   a) Turn the ON/OFF switch to the OFF position to turn OFF the steamer. The digital display turns OFF and the drain valve is opened. Do not turn power OFF at the main external power switch during blowdown.

   b) The drain valve begins to draw water from the steam generator.

   c) The fill valve operates for 3 minutes to help flush any debris through the drain valve as the generator drains.

   d) At the end of the 3-minute blowdown cycle, the fill valve closes.

   e) When blowdown is complete, the steamer can be restarted, or the shutdown procedure completed.

      - To restart the unit, refer to POWER ON (AUTOMATIC FILL) in Chapter 5.
      - To shut down the unit, refer to SHUT DOWN AND CLEANING, below.

      NOTE: The ON/OFF switch must be turned fully to the OFF position to properly START the automatic blowdown of the steamer.

B. Shutdown and Cleaning

- Perform the Shutdown and Cleaning Procedure at the end of each shift or more often if needed.

⚠ WARNING

ELECTRIC SHOCK HAZARD

Do not clean this appliance with hoses or water jets!

Doing so can cause INJURY and EQUIPMENT DAMAGE.

⚠ DANGER

HIGH HEAT HAZARD

Wait for this appliance to cool before cleaning. Attempting to clean a hot appliance can cause DEATH, INJURY, BURNS, and SCALDS.

Shutdown and Cleaning Procedure for the End of Each Shift:

1. Open the cooking compartment door and allow the appliance to cool.
2. Remove the slide racks. Wash, and rinse them according to health and sanitation requirements.
3. Remove spilled food from inside the compartments. Use a soft bristle brush to remove stuck food.
4. Clean but do not remove the drain screens.
5. Clean the interior of the compartment thoroughly.
   - Do NOT use abrasive cleaning compounds or steel wool.
6. Rinse the inside of the cooking compartments with clean water.
7. Clean the door gasket assemblies:
   a. Remove the door gasket assembly (see Figure 6-1) by holding the gasket assembly at the sides and lifting up and away from the door.
   b. Wipe the gasket assembly with a damp cloth.
   c. Wipe the inside of the door with a damp cloth.
   d. Rotate the gasket assembly 180º. This makes the gasket last longer.
   e. Replace the gasket assembly by sliding the retaining pins into the keyhole slots.

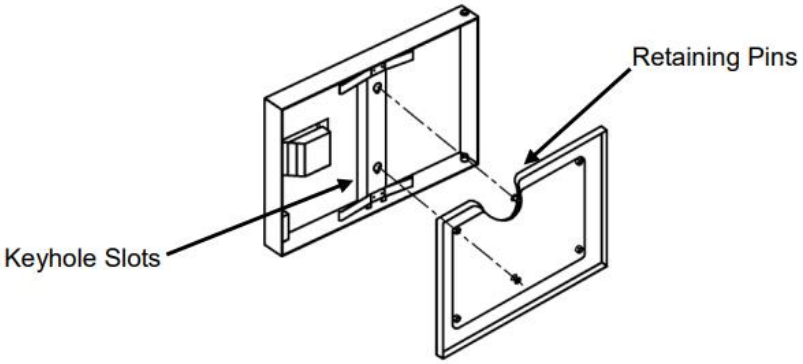

Figure 6-1

Door Gasket Assembly

8. Replace the cleaned slide racks.
9. Wipe the exterior with a damp cloth.
10. Leave cooking compartment doors open until the next use to help prevent compartment odor buildup and help increase gasket life.

CHAPTER 7 OPERATING TESTS AND FINAL CHECKOUT PROCEDURES

A. Startup Procedure with the Appliance De-Energized

1. Start with or the Main External Power Switch OFF.
2. Check the fuses or circuit breakers for proper size.
3. Make sure the water supply line valves are open.
4. Open the cooking compartment doors.
   - Check for proper installation of drain screens, slide racks, and door gasket assemblies.
   - Check that the drains are not blocked.
5. Shut the cooking compartment doors.
6. Set the ON/OFF switch to OFF position.
7. Go to B. “Generator Drain and Rinse Cycle Inspection.”

⚠ WARNING

BURN and SCALD HAZARD

If the drain is blocked, hot water can collect inside the cooking compartment and spill out when the door is opened.

Water leaking from the door gasket can be a sign of a blocked drain.

When checking inside the steamer: always open the door slowly and stand to the hinge side and away from the steamer.

BURNS and **SCALDS** can result from hot water spilling out.

⚠ DANGER

ELECTRIC SHOCK HAZARD

DEATH, **INJURY**, or **EQUIPMENT DAMAGE** can result from touching any component inside this appliance when the power is connected.

Whenever possible disconnect the power while installing, servicing, or testing this appliance.

When installation, service, or tests require power to be connected to this appliance: use extreme caution and every possible precaution and safety measure while testing or servicing this appliance.

B. Generator Drain and Rinse Cycle Inspection (3-minute Blowdown Cycle)

1. Turn OFF the Main External Power Switch.
2. Turn OFF the ON/OFF switch.
3. Turn ON the Main External Power Switch to start the 3-Minute Blowdown Cycle.
   a) Watch for plumbing leaks:
   b) If there are leaks:
      i. Turn OFF the Main External Power Switch.
      ii. Repair leaks.
      iii. Start this test over.
4. The automatic blowdown cycle opens the fill and rinse valves.
5. The drain valve remains open.
6. The drain valve and water column float assembly are flushed with fresh water.

7. Stop the blowdown cycle before it is complete by turning the ON/OFF switch ON.
    a) The operating controls energize.
    b) The digital display lights.
    c) Blowdown stops.
    d) The steam generator fills.
8. Start a 3-minute blowdown cycle by turning the ON/OFF switch OFF.
9. A steady stream of water flows from drainpipe into the floor drain.
10. No water flows into the cooking compartment.
11. After the 3-minute blowdown cycle ends, no water flows into the float column or out of the drainpipe.
12. Go to C. “Operating Test Procedures.”

C. Operating Test Procedures

- Perform this test on both cooking compartments.

1. Turn OFF the Main External Power Switch.
2. Turn OFF the ON/OFF switch.
3. Turn ON the Main External Power Switch.
    a) The 3-minute blowdown cycle starts.
    b) Turn the ON/OFF switch ON.
        - The digital display lights.
        - The automatic blowdown cycle stops.
    c) Set the steamer to MANUAL mode.
    d) The condenser solenoid clicks open, condenser flow starts, and water flows from the drainpipe.
        - If no water flows from the drain, make sure the condenser water supply valve is open and the water lines are connected properly.
    e) Water rises in the sight glass.
    f) When water reaches the safety level sensor, steam enters the cooking compartment after 5 to 7 minutes.
        - Water may drip from the nozzles until steam clears the lines.
    g) The cooking compartments steam until turned OFF or set to TIMED mode with the timer zeroed.
    h) Check for steam leaks around the door gasket.
    i) Leave the ON/OFF switch in the ON position.
    j) Set the Timer to 00:00 to stop steaming.
    k) Turn the appliance OFF using the ON/OFF switch:
        - The digital display turns OFF.
        - Automatic blowdown starts and runs for 3 minutes.

D. General Information about the Steam Shut Off Switch

- Steam Shut Off Switches (automatic steam cutoff switches) turn OFF the release of steam to a cooking compartment when the door to that compartment is opened.

⚠ DANGER

BURN AND SCALD HAZARD WARNING FOR STEAMERS WITH COMPARTMENT DOOR STEAM SHUT OFF SWITCH (SCS):

COMPARTMENT DOOR STEAM SHUT OFF SWITCHES ARE NOT INSTANT OFF!

- Even though the release of steam from the boiler ends as soon as a door is opened, residual steam in the system may take up to a minute to clear from the steam lines and the cooking compartment.
- To help prevent injury, follow all the standard precautions for opening the cooking compartment door and reaching into the cooking compartment.

Failure to do so can result in death, burns, and scalds.

- If a cooking compartment is opened and the other left closed, the closed cooking compartment continues to steam as normal.

⚠ WARNING

BURN and SCALD HAZARD

Residual steam in the system may take up to a minute to clear from the steam lines and the cooking compartment.

Always wait until this residual steam has cleared before reaching into the cooking compartment.

Reaching into a cooking compartment while steam is being released or clearing the steam lines can cause BURNS and SCALDS.

E. Function Test for the Steam Shut Off Switch

- Perform this test after the appliance passes Initial Setup, Blowdown Inspection, and Operating Test, and the appliance is ready for use.

1. Start the appliance with both cooking compartments in MANUAL or TIMED mode.
2. Wait for the cooking compartments to reach cooking temperature.
3. Stand to the hinge side and back from the upper door and carefully open the upper door.
4. Steaming stops within a minute.
5. If steaming does not stop within a minute: Shut down the appliance and call your qualified Cleveland Range authorized service representative.
6. Leave the upper door open and let the cooking compartment cool for three minutes.
7. Close the upper compartment door. Steaming starts, and the cooking compartment reaches 193°F cooking temperature, and the timer starts counting down if it is in TIIMED mode.
8. If steaming does not start: Shut down the appliance and call your qualified Cleveland Range authorized service representative.
9. Repeat this test with the lower cooking compartment door.
10. Repeat this test with both cooking compartment doors at the same time.

CHAPTER 8 PREVENTATIVE MAINTENANCE

A. General Information

- Follow the maintenance instructions and schedules to help keep the appliance working properly.
- Increase the frequency of maintenance as needed depending on use and water quality.
- Contact your qualified Cleveland Range authorized service agency or Cleveland Range for more information about maintenance scheduling, products, and services.

B. Maintenance and Service Records

1. Make a file just for maintenance records.
2. Keep a written record of daily, weekly, monthly, and yearly maintenance, service, and repair. Each record must include at least:
   - The date of the service, maintenance, or repair.
   - A description of the service, maintenance, or repair performed.
   - Copies of purchase order(s) and invoice(s) for repair parts and service, maintenance, or repair. Include part numbers, if applicable.
   - The name and signature of the person performing the service, maintenance, or repair.

C. Daily Maintenance

1. Blowdown
   - Blowdown the steam generator. Follow the instructions in Chapter 6.
2. Clean the Appliance
   - Clean the interior and exterior of the appliance. Follow the instructions in Chapter 6.

D. Weekly Maintenance

1. Clean the Cooking Compartment Drains
   - Blockage of the drain line can cause pressure buildup in the compartment(s) resulting in steam leaks around the door gasket(s), reduced performance, and compartment implosion.
2. To inspect the drain screens and the drain lines for blockage:
   a. Clean the cooking compartment and drain screens. Follow the instructions in Chapter 6.
   b. Rotate the drain screen 90 degrees to inspect the drain opening.
   c. Clean the opening and put the screen back into their operating position.
   d. Pour a quart of water into the cooking compartment. If the water drains slowly or stands, clean the cooking compartment drains with a NSF/FDA approved drain cleaner.
      - Follow the instructions of the drain cleaner manufacturer.
      - Flush the cooking compartments and drains with clean water.

E. Monthly Maintenance

1. Descale the Steam Generator

- Steam Generators should be descaled once a month, or more often depending on scale buildup.
- Note the date of decaling in your maintenance and service records to help keep Steam Generator descaling on schedule.

2. SteamCraft Descaling Procedure Using the Descaling Pump System

- Cleveland Range recommends that your service agency descales your 24CEA10.2

- If you have trained and skilled in-house maintenance personnel, you may wish to discuss purchasing Descaling Pump System P/N: 1071421 for use with Dissolve® Descaler Solution P/N 106174 with your sales representative or service agency.
- Use no other system of descaling.

3. Manual Method to Descale Steam Generator

NOTE: Part No. 106174 is the Part No. for a case (6 1-gallon containers) of DISSOLVE® descaler.

THESE INSTRUCTIONS ARE FOR USE WITH DISSOLVE® DESCALER SOLUTION Cleveland Range Part No. 106174.

a) Health Hazard Data, Effects of Overexposure

- This product may cause a burning sensation to eyes or skin.

b) Emergency and First Aid Procedures

- In case of eye contact, immediately flush eyes with water for 15 minutes. If irritation persists seek medical attention.
- In case of skin contact wash with soap and water.
- If inhaled, remove to fresh air. If burning persists, call a physician.
- If ingested, take 1 or 2 glasses of water and call a physician.

c) Spill or Leak Procedures

- Rinse with plenty of water to dilute.
- Sodium carbonate or calcium carbonate may be used to soak up liquid.
- Considered non-hazardous, spent material may be disposed of in a sewer system with water flush.

⚠ CAUTION

Do not use any other product or method of descaling other than the DISSOLVE® Descaler method using Part No. 106174.

⚠ WARNING

Descaling procedure is slightly different depending on model. This entire procedure should be read and fully understood as it applies to the model being descaled, before beginning descaling operations.

⚠ DANGER

The liquid solution in Cleveland Range Descaler Solution Part No. 106174 or 1061741 can be harmful if not handled properly. Follow these basic safety rules for handling and using this product. Instructions and warnings on container labels supersede all other warnings and instructions.

Wear protective clothing when mixing or applying chemical cleaners.

Wear rubber gloves, and OSHA approved eye protection when descaling

Avoid breathing fumes.

In case of eye contact, immediately flush eyes with water for 15 minutes. If irritation persists, seek medical attention.

In case of skin contact, wash with soap and water.

If inhaled, remove to fresh air. If burning persists, call a physician.

If ingested, take 1 or 2 glasses of water, and call a physician.

NOTICES regarding the Manual Descaling Procedure

- Cleveland Range recommends DISSOLVE® Descaler Solution, Part No. 106174.
- Use no other system of steamer descaling.
- Appropriate warnings and safe handling procedures must be provided to handlers and users.
- Instructions and warnings on Dissolve® containers and Material Safety Data Sheets supersede and replace instructions and warnings in this manual.
- General precautions: wear rubber gloves, splash goggles and other protective clothing and equipment as necessary.
- Refer to Dissolve® container labels and Material Safety Data Sheets for information regarding eyewash, first aid, medical treatment, and spill control.

4. Descaling Procedure

NOTE: Descale both steam generators at the same time.

Figure 8-1

Descale Port

1) Turn steamer OFF and open door(s).
   - 3-minute Automatic Blowdown cycle runs.
2) Turn steamer ON.
   - Generator begins to refill.
3) Set to TIMED mode.
4) DO NOT start timer, **DO NOT HEAT APPLIANCE**.
   - Water must be cold for descaling.
   - **Open cooking compartment door(s) to PREVENT HEATING.**
   - Leave cooking compartment door(s) open.
5) Remove descaling port cap (see Figure 8-1).
6) Add 1 gallon of Dissolve® through the descale port while generator refills.
   - Pour slowly to avoid overflow.
   - Refill can take up to 8 minutes.
7) Add 1-2 gallons of cold tap water to descaling port after refill stops, continue to fill with cold water until descaling solution enters cooking compartment(s) through steam nozzles.
   - Adding extra water to generator(s) raises descaling solution to higher-than-normal water fill level, allowing descaling solution to clean sensors and surfaces above normal water fill level.
8) Let descaling solution soak in generator(s) for 1 hour.
9) After 1 hour, turn ON/OFF switch OFF to start 3-minute Automatic Blowdown.
   - This drains and rinses generator(s).
10) After Automatic Blowdown ends, turn ON/OFF switch to ON.
11) Add cold tap water through descaling port after generator refills, until water enters cooking compartment(s) through steam nozzles.
    - This raises the water level to rinse the surfaces cleaned in Step 8.
12) Turn ON/OFF switch OFF to start 3-minute Automatic Blowdown to rinse generator.
13) Replace descaling cap and close cooking compartment door(s).
14) Set to TIMED mode.
15) Turn steamer ON/OFF switch to ON and set TIMER for 20 minutes.

16) After the timer counts down, turn ON/OFF switch to OFF to start Automatic Blowdown.

17) Descaling is complete, resume normal startup, cooking, and shutdown procedure.

F. Yearly Maintenance

1. Clean the Water Line Strainer

- See Figure 8-2.
- Clean the water line strainers at least once a year.
- When first installed, check the strainer more frequently to find out how often the strainer must be cleaned.
  - a) Close the valve(s) in the water supply lines.
  - b) Unscrew the filter cap from the bottom of the strainer.
  - c) Remove the filter screen and wash it with clean water.
  - d) Check the O-ring for wear and replace if necessary.
  - e) Put the screen back in the cap.
  - f) Put the cap back in the cap.
  - g) Open water supply valve(s) and check for water leaks.

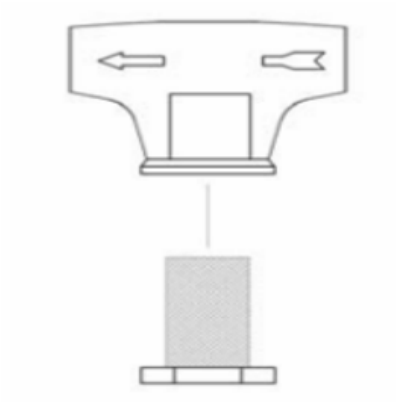

Figure 8-2

Water Line Strainer

Actual sizes and proportions may vary

CHAPTER 9 TROUBLESHOOTING GUDIE

The Troubleshooting Guide is a list of symptoms of problems that may occur during routine operation.

- “Problem” (left column) lists common operating problems.
- “Possible Cause” (center column) lists causes of problems in the order they should be checked.
- “Remedy / Reference” (right column) lists fixes for problems from easiest to hardest.
- “Notes” in “Remedy / Reference column are at end of the Troubleshooting Guide.

ATTEMPTING TO REPAIR OR CORRECT PROBLEMS REQUIRING A QUALIFIED CLEVELAND RANGE AUTHORIZED SERVICE REPRESENTATIVE VOIDS THE WARRANTY

Trouble Shooting Guide

PROBLEM	POSSIBLE CAUSE	REMEDY/REFERENCE
Power indicator light does not turn ON when ON/OFF switch is in the ON position.	Power turned OFF at main external power switch or breaker.	Turn ON power at main external power switch or breaker.
	Inoperative controls or failed light.	See Note 1.
Power ON but steam does not fill.	Water supply to steamer shut off.	Open water supply valves.
	Water line strainer and/or external filter system is clogged.	Clean water supply strainer and/or filter system.
	Inoperative solenoids or controls.	See Note 1.
Control panel POWER indicator light ON and steamer does not make steam in MANUAL or TIMED modes.	Water supply to steamer shut OFF.	Open water supply valves.
	Door interlock switch not engaged or has failed (if unit has this option).	Close door completely. If problem persists, see Note 1.
	Water line strainer and/or external filter is clogged.	Clean water supply strainer and/or external filter system.
	Inoperative controls.	See Note 1.
Abnormal amount of steam coming from drain.	Hot water instead of cold water connected to condenser fitting.	Make proper connections. See section on Water Supply.
	Water supply to condenser turned OFF.	Open water supply valve.
	Condenser water line strainer and/or nozzle clogged.	Clean out condenser water supply strainer and/or nozzle.
	Water supply line to condenser blocked, broken, or leaking.	Clean out condenser water supply line. See Note 1.
	Inoperative controls or solenoids.	Turn OFF electricity at main external power switch. See Note 1.
Power light is ON, but timer does not light (Easy	Inoperative controls.	See Note 1.

Timer models).		
Compartment bottom dirty with food drippings.	Juices and/or food leaking from pans.	Put a solid pan under perforated pans to catch drippings or put less food in pans and clean daily.
Reduced steam flow into cooking compartment.	Steam generator scale buildup.	Descale steam generator with Cleveland Range approved descaler.
	Inoperative or improperly adjusted controls.	See Note 1.
Water leaking from bottom of cabinet.	Broken or loose plumbing inside steamer cabinet.	Turn OFF electricity at main external power switch and close water supply valve(s). See Note 1.
Steam and/or water draining around compartment door. **See Warning under Note 9.**	A small amount of water condensing around the door is normal.	No action necessary.
	External drain not properly installed, should be free-air vented and pitched down.	See Notes 2 and 3.
	External drain is blocked or restricted.	Clean external drain. See Note 3.
	Door gasket or door parts worn.	See Note 1.
	Inoperative controls inside cabinet.	Turn OFF power at main external power switch. See Note 1.
Water leaking from water pipes or drain lines.	Plumbing needs repair.	See Note 3.
ON/OFF Indicator ON but steamer does not make steam in timed mode.	Inoperative timer control or damaged wiring.	See Note 1.
Water is flowing out of steam ports into cooking compartment. **See Warning under Note 9.**	Water probes are dirty.	Turn OFF water supply to steamer and descale steamer manually with Cleveland Range approved descaler. See Operators Manual for instructions. If condition persists, see Note 1.
	Inoperative controls.	See Note 1.
Water coming from drain when not cooking.	Inoperative controls.	See Note 1.
	Drain solenoid is stuck partway open.	Turn OFF power to blowdown steamer. If problem persists, see Note 1.
Steam flow does not stop when TIMER stops.	Operating in manual mode.	Switch to timed mode for timer to control steam flow.

	Inoperative controls inside the cabinet	Turn OFF power at ON/OFF switch. See Note 1.
Food takes too long to cook. **To verify steamer's proper operation see Note 8.** **Note: descaled every 4-6 weeks.**	Pans too close to bottom of cabinet.	Put pans in racks near top of cabinet.
	Compartment overloaded with too much food.	Put less food into pan. Use fewer pans.
	Food is frozen.	Increase cooking times for frozen food.
	Suggested cooking times are usually listed for cooking at sea level.	Extend cooking times for altitudes above 2000 feet.
	Hot water connected to condenser line.	Make proper connections. See section on Water Supply. See Note 3.
	Condenser water turned OFF.	Turn ON water to condenser.
	Condenser water line strainer and/or nozzle is clogged.	Clean out condenser water supply strainer and/or nozzle.
	Steam generator scale buildup.	Descale steam generator with Cleveland Range approved descaler.
	Inoperative or improperly adjusted controls.	See Note 1.
	Food is being cooked in covered solid pans.	Remove covering. Steam must have direct access to food for cooking to take place.
Water comes out of the descale port.	Descale cap is missing.	Install descale cap. Descale port must be closed tightly for steamer to operate properly. If missing, see Note 10.
	Descale cap is loose.	Tighten descale cap. Descale port must be closed tightly for steamer to operate properly.
	Descale cap and/or gasket is damaged.	See Note 10.
Easy Timer display has noise/disruptions.	Power surge/not clean power.	Recommended power surge bar to resolve rare EMI/power disruptions.
Easy Timer button does not respond	If EasyTimer display is ON, then the button membrane is broken.	See Note 1.
	If EasyTimer display is OFF, then wiring has been damaged.	See Note 1.

NOTES

1. If the problem is inside the appliance, call a qualified Cleveland Range authorized service representative or Cleveland Range. (Please have the model number and serial number ready when calling.) Cleveland Range will not pay for warranty repairs by unauthorized maintenance and repair centers.
2. Proper installation of the appliance is the responsibility of the Owner-User. Refer to the Warranty.
3. Repairs to external plumbing should be done by a Licensed Plumber.
4. To restart the unit, follow the Lighting (Start-Up) instructions in this manual.
5. Repairs to external wiring should be done by a Licensed Electrician.
6. For more information on products and services, contact your nearest Authorized Sales Representative
7. Call Cleveland Range Kitchen Care line at 844-724-CARE (2273) for preventative maintenance programs, descaling kits, descaling information and water treatment systems.
8. To evaluate whether this appliance is operating at normal cooking performance, conduct the Egg Test. **NOTE:** this test is not valid for pressure steamers.
   a) Place a perforated steam table pan in the middle rack position in the cooking compartment.
   b) Turn ON the appliance and set to Manual Mode to start steaming.
   c) Preheat the cooking compartment for 10 minutes.
   d) After the compartment is preheated, place a fresh egg on a perforated steam table pan in the middle of the cavity.
   e) Close the door and set the timer as directed by the size chart below:

Egg Size	Time
Medium	12 minutes
Large	14 minutes
Extra Large	14 minutes

   f) Carefully remove the egg and place it in a container with cold water running over it.
   g) Let cool under cold running water for 5 minutes.
   h) After cooling, crack eggshell and peel.
   i) A properly operating steamer produces a perfect hard-boiled egg.

   The use of extremely “hard” water or failure to follow the cleaning procedures in the Shutdown and Cleaning Instructions may cause scale buildup. Have Cleveland Range authorized technicians or trained onsite maintenance personnel descale the steamer.

Cleveland

Cleveland Range, LLC
760 Beta Drive, Unit D
Mayfield Village, Ohio 44143
216.481.4900
800.338.2204

Every new piece of Welbilt Foodservice equipment comes with KitchenCare® and you choose the level of service that meets your operational needs from one restaurant to multiple locations

StarCare – Warranty & lifetime service, certified OEM parts, global parts inventory, performance audited

ExtraCare — CareCode, 24/7 Support, online/mobile product information

LifeCare – Install & equipment orientation, planned maintenance, KitchenConnect™, MenuConnect®

Talk with KitchenCare® • 1-844-724-CARE • www.mtwkitchencare.com

WELBILT KitchenCare

To learn how Welbilt Foodservice and its leading brands can equip you, visit our global web site at www.welbilt.com, then discover the regional or local resources available to you.

©2016 Welbilt Foodservice except where explicitly stated otherwise. All rights reserved. Continuing product improvement may necessitate change of specifiations without notice.

Commercial Kitchen Equipment Parts

Find more Cleveland equipment resources at

parthubz.com/equipment/cleveland

Need parts or service?

Call 833-700-8006

support@parthubz.com

parthubz.com