Commercial Kitchen Equipment Parts

CLEVELAND 24CGA10

Cleveland 24CGA10 document

Provided by PartHubz

parthubz.com

833-700-8006 | support@parthubz.com

Visit www.clevelandrange.com to locate a service or sales representative in your area.

CLEVELAND

SteamCraft

Gas Convection Steamer

Operation, Installation & Maintenance Manual

This manual is updated as new information and models are released. Visit our website for the latest manual.

MODEL:

24CGA10

For your future reference.

Model # _____

Serial # _____

Read the manual thoroughly. Improper installation, operation or maintenance can cause property damage, injury or death.

WELBILT®

November 2019 Part # - KE004036-2 D

STATEMENT OF RESPONSIBILITIES / DÉCLARATION DES RESPONSABILITÉS / DECLARACIÓN DE RESPONSABILIDADES

This document is for use by experienced and trained Qualified Cleveland Range, LLC Authorized Service Representatives who are familiar with both the safety procedures, and equipment they service. Cleveland Range, LLC assumes no liability for any death, injury, equipment damage, or property damage resulting from use of, improper use of, or failure to use the information contained in this document. Cleveland Range, LLC has made every effort to provide accurate information in this document, but cannot guarantee that this document does not contain unintentional errors and omissions.

The information in this document may be subject to technical and technological changes, revisions, or updates. Cleveland Range, LLC assumes no liability or responsibility regarding errata, changes, revisions, or updates.

Qualified Cleveland Range, LLC Authorized Service Representatives are obligated to follow industry standard safety procedures, including, but not limited to, OSHA regulations, and disconnect / lock out / tag out procedures for all utilities including steam, and disconnect / lock out / tag out procedures for gas, electric, and steam powered equipment and / or appliances.

All utilities (gas, electric, water and steam) should be turned OFF to the equipment and locked out of operation according to OSHA approved practices during any servicing of Cleveland Range equipment

Qualified Cleveland Range, LLC Authorized Service Representatives are obligated to maintain up-to-date knowledge, skills, materials and equipment.

Ce document est destiné à l'usage des Représentants de Service qualifiés et autorisés de Cleveland Range, LLC qui possèdent l'expérience et la formation ainsi que la bonne connaissance des mesures de sécurité et du matériel qu'ils entretiennent.

Cleveland Range, LLC décline toute responsabilité pour tout cas de décès, blessure, dommage matériel ou dommage aux biens résultant de l'utilisation, de la mauvaise utilisation ou du manquement d'utilisation des renseignements contenus dans ce document.

Cleveland Range, LLC s'est efforcé à fournir des renseignements précis dans ce document mais ne peut garantir que ce document soit exempt d'erreurs et d'omissions non intentionnelles.

Les renseignements contenus dans ce document peuvent être assujettis à des changements techniques et technologiques, des révisions ou des mises à jour.

Cleveland Range, LLC décline toute obligation ou responsabilité concernant les errata, modifications, révisions ou mises à jour.

Les Représentants de Service qualifiés et autorisés de Cleveland Range, LLC sont tenus de se conformer aux mesures de sécurité normalisées de l'industrie, y compris, mais sans s'y limiter, les réglementations de l'OSHA, les procédures de débranchement / verrouillage / étiquetage relatives à tous les services publics, dont l'approvisionnement en vapeur, et les procédures de débranchement / verrouillage / étiquetage relatives aux équipements et/ou appareils fonctionnant au gaz, à l'électricité et à la vapeur.

Au cours de tout entretien d'un appareil Cleveland Range, tous les services publics (gaz, électricité, eau et vapeur) doivent être FERMÉS au niveau de l'appareil et le dispositif de fonctionnement doit être verrouillé suivant les pratiques approuvées de l'OSHA.

Les Représentants de Service qualifiés et autorisés de Cleveland Range, LLC sont tenus d'actualiser en permanence leurs connaissances, compétences, matériel et équipement.

Este documento está destinado para el uso de los Representantes de Servicio calificados y autorizados de Cleveland Range, LLC quienes cuentan con la experiencia y la capacitación así como el buen conocimiento de las medidas de seguridad y de los equipos que mantienen.

Cleveland Range, LLC, declina toda responsabilidad en caso de cualquier fallecimiento, lesiones, daños al equipo o daños a la propiedad resultantes de la utilización, del uso indebido o de la falta de utilización de la información provista en este documento.

Cleveland Range, LLC se ha esforzado en suministrar información precisa en este documento, pero no puede garantizar que este documento esté exento de errores y de omisiones no intencionales.

La información contenida en este documento podría estar sujeta a cambios técnicos o tecnológicos, revisiones o actualizaciones. Cleveland Range, LLC declina toda obligación o responsabilidad con respecto a erratas, modificaciones, revisiones o actualizaciones.

Los Representantes de Servicio calificados y autorizados de Cleveland Range, LLC tienen la obligación de seguir los procedimientos estándar de seguridad de la industria; los cuales incluyen pero no se limitan a los reglamentos de la OSHA (La Administración de la Seguridad y Salud Ocupacionales), los procedimientos de desconexión, cierre y etiquetado relativos a todos los servicios públicos incluyendo el suministro de vapor y los procedimientos de desconexión, cierre y etiquetado para los equipos y/o aparatos que funcionan a base de gas, electricidad o vapor.

Cuando se esté dando servicio o mantenimiento a un aparato de Cleveland Range, todos los servicios públicos (gas, electricidad, agua y vapor) deben estar APAGADOS para el equipo en cuestión y se debe seguir el procedimiento de cierre de operaciones de acuerdo con las prácticas aprobadas por la OSHA.

Los Representantes de Servicio calificados y autorizados de Cleveland Range, LLC tienen la obligación de actualizar constantemente sus conocimientos, destrezas, materiales y equipamiento.

FOR YOUR SAFETY / POUR VOTRE SÉCURITÉ / PARA SU SEGURIDAD

FOR YOUR SAFETY

Do not store or use gasoline or any other flammable liquids and vapours in the vicinity of this or any other appliance.

WARNING: Improper installation, operation, adjustment, alteration, service or maintenance can cause property damage, injury or death. Read the installation and operating instructions thoroughly before installing, operating or servicing this equipment.

Do not spray aerosols in the vicinity of this appliance while it is in operation.

This appliance is not to be used by persons with reduced physical, sensory or mental capabilities, or lack of experience and knowledge, unless they have been given supervision or instruction concerning use of the appliance by a person responsible for their safety.

This appliance is not for use by children and they must be supervised not to play with it.

Retain this manual for your reference. The boiler base Tabletop is NOT a supporting surface. Death, Injury or Equipment Damage will result from mounting or placing anything on the Tabletop.

When the ON/OFF lever is turned to the OFF position, Steamer will remain HOT for some time. Avoid contact with hot surfaces and steam.

Death, Injury or Equipment Damage can result from touching any component inside this appliance when the power is connected.

POUR VOTRE SÉCURITÉ

Ne pas entreposer ou utiliser d'essence ou d'autres liquides ou vapeurs inflammables à proximité de cet appareil ou de tout autre appareil.

AVERTISSEMENT : Toute mauvaise pratique en matière d'installation, de fonctionnement, de réglage, de modification, d'entretien ou de maintenance peut causer des dommages matériels, des blessures ou la mort. Lisez la totalité des instructions d'installation et d'utilisation avant d'installer, d'utiliser ou d'entretenir cet équipement.

Ne pas pulvériser des aérosols dans le voisinage de cet appareil alors qu'il est en fonctionnement.

Cet appareil ne doit pas être utilisé par des personnes dont les capacités physiques, sensorielles ou mentales sont réduites, ou des personnes dénuées d'expérience ou de connaissance, sauf si elles ont pu bénéficier, par l'intermédiaire d'une personne responsable de leur sécurité, d'une surveillance ou d'instructions préalables concernant l'utilisation de l'appareil.

Cet appareil n'est pas destiné à être utilisé par des enfants et ils doivent être surveillés pour s'assurer qu'ils ne jouent pas avec l'appareil.

Conservez ce manuel pour votre référence.

PARA SU SEGURIDAD

No guarde ni use gasolina o cualesquiera otros líquidos o vapores inflamables en las cercanías de éste o cualquier otro aparato.

ADVERTENCIA: La indebida instalación, operación, ajuste, modificación, servicio o mantenimiento puede ocasionar daños a la propiedad, lesiones o muerte. Lea detenidamente las instrucciones de instalacion y de operación antes de instalar, poner a funcionar o dar servicio a este equipo.

No pulverice aerosoles en las proximidades de este aparato mientras está en funcionamiento.

Este aparato no debe ser utilizado por personas con capacidades físicas, sensoriales o mentales reducidas, o que no tengan la experiencia y los conocimientos adecuados, a menos que estas personas hayan recibido supervisión e instrucciones en cuanto al uso del aparato por la persona responsable de la seguridad de ellas.

Guarde este manual para su referencia.

WARNING / AVERTISSEMENT / ADVERTENCIA

Improper installation, operation, adjustment, alteration, service or maintenance can cause property damage, injury or death. Read the installation and operating instructions thoroughly before installing, operating or servicing this equipment. / Toute mauvaise pratique en matière d'installation, de fonctionnement, de réglage, de modification, d'entretien ou de maintenance peut causer des dommages matériels, des blessures ou la mort. Lisez la totalité des instructions d'installation et d'utilisation avant d'installer, d'utiliser ou d'entretenir cet équipement. / La indebida instalación, operación, ajuste, modificación, servicio o mantenimiento puede ocasionar daños a la propiedad, lesiones o muerte. Lea detenidamente las instrucciones de instalacion y de operación antes de instalar, poner a funcionar o dar servicio a este equipo.

Do not lean on or place objects on the equipment. / Ne vous penchez pas sur oune placez pas des objets sur la lèvre. / No se apoye ni coloque objetos en el labio.

Hot product and surfaces. / Produit et surfaces chaudes. / Producto y superficies calientes.

Do not touch. / Ne pas toucher. / No la toque

Stand clear of product discharge path when discharging hot product. / Écartez-vous du chemin de décharge d'un produit chaud. / Permanezca alejado de la ruta de descarga del producto al vaciar producto caliente.

Keep hands away from moving parts and pinch points. / Gardez les mains loin des pièces mobiles et des points de pincement. / Mantenga las manos lejos de piezas movibles y puntos de presión muy localizada.

Inspect unit daily for proper operation. / Inspectez l'unité tous les jours pour son bon fonctionnement. / Inspeccione diariamente el funcionamiento correcto de la unidad.

Pressurized device. / Appareil sous pression. / Dispositivo de presión.

Keep clear of pressure relief discharge. / Restez à l'écart de la soupape de sureté. / Permanezca alejado de la descarga de presión.

Do not climb, sit or stand on equipment. / Il ne faut pas monter, s'asseoir ni se tenir debout sur l'équipement. / No subirse, ni sentarse ni pararse sobre el equipo.

Surfaces and product may be hot! Wear protective equipment. /Les surfaces et le produit peuvent être chauds! Portez un équipement de protection. / ¡Las superficies y el producto pueden estar calientes! Utilice equipo protector.

Heavy / Lourd / Pesado

Team or mechanical lift. / Équipe ou remontée mécanique. / Equipo o elevador mecánico.

Floor may become slippery from product spillage. / Déversement de produit peut causer de plancher à être glissante. / Derrame de producto puede causar piso a ser resbaladizo.

Unit must be anchored as per manual. / Unité doit être ancrée selon les directives du manuel. / Unidad debe estar fijado según el manual.

Do not fill kettle above recommended level marked on outside of kettle. / Ne remplissez pas la chaudière en excès du niveau recommandé marqué sur la chaudière. / No llene la marmita arriba del nivel recomendado marcado fuera de la marmita.

SERVICING / ENTRETIEN / SERVICIO

Have a qualified service technician maintain your equipment. / Demandez à un technicien en entretien et en réparation qualifié d'effectuer l'entretien de votre équipement. / Haga que un técnico de servicio calificado mantenga su equipo

Ensure kettle is at room temperature and pressure gauge is showing zero or less prior to removing any fittings. / Assurez-vous que la chaudière est à température ambiante et que le manomètre est à zéro ou moins avant de retirer des accessoires. / Asegúrese de que la marmita esté a temperatura ambiente y el manómetro esté mostrando cero o menos antes de retirar cualquier accesorio.

Remove electrical power prior to servicing. / Coupez l'alimentation électrique avant l'entretien. / Desconecte la energía eléctrica antes de darle servicio.

Risk of electric shock. / Risque de choc électrique. / Riesgo de choque eléctrico.

OPERATION, INSTALLATION & MAINTENANCE MANUAL
SteamCraft 24CGA10
Table of Contents

Chapter ..... Page

1 General Safety 1
- A. Laws, Codes, and Regulations 1
- B. Gas Leak Instructions 1
- C. Operational Safety 1

2 Product Information 3
- A. Product Information 3
- B. Model Numbers and Serial Numbers 3
- C. Product Information Plate 3
- D. Heat Standby Feature 3

3 Before Each Use 4
- A. Inspecting the Cooking Compartment 4
- B. Optional Compartment Door Steam Shut Off Switch (SCS) 4

4 Cooking 5
- A. Quick Reference Lighting and Shutdown Summary Instructions 5
- B. Control Panel Switches 6
- C. Operating and Cooking Procedure 7
- D. Timed Mode Operating and Cooking Procedure 7
- E. Manual Mode Operating and Cooking Procedure 7
- F. Dial Timer Control Panel 8
- G. Keypad Timer Control Panel 9

5 Cleaning 10
- A. Steam Generator Blowdown 10
- B. Shutdown and Cleaning 10

6 General Installation Information 12
- A. Inspect for Shipping Damage 12

7 Installation 12
- A. Select a Location 12
- B. Exhaust Hood Requirements 13
- C. Position and Level the Appliance 13
- D. Slide Racks (Pan Racks) 13
- E. Gas Supply 14
- F. Water Supply 15
- G. Electric Power Supply 17
- H. Free Air Vented Drain Line 18
- I. Installation Checklist 19

8 Startup Procedure 20
A. Lighting Instructions 20
B. Shutdown Instructions 21

9 Operating Tests 22
A. Startup Procedure with the Appliance De-Energized 22
B. Steam Generator Drain and Rinse Cycle Inspection 23
C. Operating Test Procedures 23
D. Timer Test for Dial Timer Control Panel 24
E. Timer Test for Keypad Control Panel 25
F. General Information about the Compartment Door Optional Steam Cut Off Switch 25
G. Function Test for the Compartment Door Optional Steam Cut Off Switch 26

10 Preventative Maintenance 26
A. General Information 26
B. Maintenance and Service Records 26
C. Daily Maintenance 27
D. Weekly Maintenance 27
E. Monthly Maintenance 27
F. Yearly Maintenance 30

11 Troubleshooting Guide 31

CHAPTER 1 GENERAL SAFETY

A. Laws, Codes, and Regulations

1. The installation of this appliance must conform with:
   a. The National Fuel Gas Code, ANSI Z223.1 / NFPA 54 (latest edition), or the Natural Gas and Propane Installation Code CSA B149.1, or local codes, as applicable.
   b. The National Electrical Code, ANSI/NFPA 70 (latest edition), or the Canadian Electrical Code, CSA C22.2, or local codes, as applicable.
      - When installed, the appliance must be electrically grounded in accordance with the above.
      - NOTE: This appliance is not GFI (GFCI) compatible.
   c. The *Food Code* (latest edition) of the Food and Drug Administration (FDA).
2. This equipment is to be installed to comply with the applicable federal, state, or local plumbing codes.
3. Instructions must be read in their entirety before starting this appliance.
4. Installation must comply with <u>all</u> local fire and health codes.

B. Gas Leak Instructions

Post instructions to be followed if the user smells gas. Display the instructions in a prominent location. Obtain the instructions from the local gas supplier.

Until the leak is stopped, observe the following precautions in addition to the posted instructions.

- Do not light or start any appliance.
- Do not touch any electrical switch.
- Do not use any phone in the building.
- Immediately call the gas supplier from a phone away from the building. Follow the gas supplier's instructions.
- If the gas supplier cannot be reached, call the fire department.

C. Operational Safety

The Operational Safety section outlines minimum safety policies and procedures for operating one or more Cleveland Range appliances.

1. Do not store anything on top and underneath the appliance.
2. KEEP THE APPLIANCE AREA FREE AND CLEAR OF COMBUSTIBLES.
3. Proper air supply for ventilation and combustion is REQUIRED for and CRITICAL to safe, efficient operation of this appliance.
4. Place non-slip draining anti-fatigue mats rated for use in wet, greasy, or dry work areas on the floor in front of the appliance and other locations as needed. Obtain the best mats for your needs from your local supplier.
5. Wear BOOTS appropriate to the work area to help protect feet, and to help prevent slips and falls.
6. Allow only qualified Cleveland Range authorized service representatives to service the appliance.
7. Use only factory authorized repair parts.
   a. Maintain written records of appliance service, maintenance, and repair. See Chapter 6.

⚠ DANGER

DO NOT TRY TO LIGHT BURNERS WITH A FLAME.

This appliance has an electronic ignition system, which automatically lights burners, senses flame, and controls gas flow. Burners cannot be lit with a flame.

DEATH, INJURY, OR EQUIPMENT DAMAGE may result.

⚠ DANGER

DEATH, INJURY OR EQUIPMENT DAMAGE may result from an improperly adjusted gas control and ignition system. Do not alter any adjustments on the electronic control or gas valve.

If adjustment is required, contact an authorized service center. Cleveland Range is in no way responsible for the operation or safety of this equipment if the controller, valve, or igniter probe are adjusted by anyone other than a qualified Cleveland Range authorized service representative.

⚠ DANGER

BURN and SCALD HAZARD

Exposure to steam, condensate, and hot surfaces can cause death, burns, and scalds.
To help avoid injury:

- Do NOT breathe steam or condensate.
- Stand on the hinge side and away from the appliance and slowly open the cooking compartment door.
- Open the door slightly to allow steam, condensate, and heat to vent before looking or reaching into the cooking compartment.
- Always wear DRY heatproof gloves when reaching into the cooking compartment or handling hot items. Wet or damp gloves conduct heat and may cause burns when handling hot items.

Failure to follow these precautions can result in death, burns, and scalds.

⚠ WARNING

This appliance is not GFI (GFCI) compatible.

Do not use a GFI (GFCI) circuit.

Using a GFI (GFCI) circuit can result in injury, equipment damage, and property damage.

CHAPTER 2 PRODUCT INFORMATION

A. PRODUCT INFORMATION This manual covers the operation of Cleveland Range model 24CGA10 (Ultra 10) and the standard features and options available on this appliance.

- Other than the selection of options, there are presently no significant design, parts, or operating differences among appliances with this model numbers.
- For further information, contact your Cleveland Range sales representative or Cleveland Range.

B. MODEL NUMBERS AND SERIAL NUMBERS

1. Cleveland Range, LLC assigns two product identification numbers to each appliance: a model number and a serial number.
2. Please provide this information when you contact Cleveland Range or a qualified Cleveland Range authorized service representative:

- Model Number_____
  (Write the Model Number of your appliance here.)

- Serial Number_____
  (Write the Serial Number of your appliance here.)

C. PRODUCT INFORMATION PLATE

The Product Information Plate on the left side of the appliance lists:

- Model
- Serial Number
- Clearances
- Power and Wiring Requirements
- Fuel Gas Type and Requirements

D. HEAT STANDBY FEATURE

The steamer has a Heat Standby Feature to keep the Steam Generator near steaming temperature between cooking operations. When timed models have the timer set to zero, the Heat Standby Feature will turn the burners on every 6 minutes for 20 seconds as long as the steamer is ON and has water in it.

- **Do not work near or above the exhaust flue whenever power is on.**
- **There is no warning to Heat Standby burner ignition.**

CHAPTER 3 BEFORE EACH USE

A. INSPECTING THE COOKING COMPARTMENTS

1. Before every steaming operation, inspect the cooking compartments and remove any food scraps or debris. See Chapter 5.
2. Inspect and clean the drains and drain screens before each use. See Figure 3-1.
3. Be sure the screens cover the drains. The screens prevent large pieces of food from entering and blocking the drains.
4. If the drains are slow, see Chapter 5.

Figure 3-1 Compartment Drain Screen

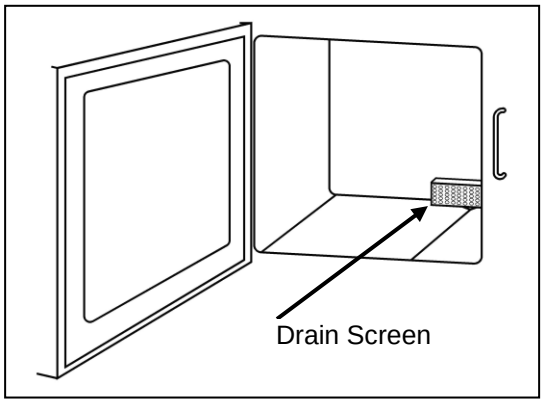

⚠WARNING

BURN, SCALD AND EQUIPMENT DAMAGE HAZARD

If the drain is blocked, hot water can fill the cooking compartment and spill out when the cooking compartment door is opened.
Signs of blocked drains include steam or water leaks around the cooking compartment door, and reduced cooking performance.
To help avoid injury:

- When checking inside the cooking compartment: always stand to the hinge side and away from the appliance and open the door slowly.
- Inspect the drain(s) before each use and clean them if needed.

Failure to follow these precautions can cause burns, scalds, and equipment damage.

B. COMPARTMENT DOOR STEAM SHUT OFF SWITCH (SCS)

- Steam Shut Off Switches (automatic steam cutoffs) turn OFF the release of steam to a cooking compartment when the door to that compartment is opened.

⚠ DANGER

BURN AND SCALD HAZARD WARNING FOR STEAMERS WITH OPTIONAL COMPARTMENT DOOR STEAM SHUT OFF SWITCH (SCS):

COMPARTMENT DOOR STEAM SHUT OFF SWITCHES ARE NOT INSTANT OFF!!!

- Even though the release of steam from the steam generator ends as soon as a door is opened, residual steam in the system may take up to a minute to clear from the steam lines and the cooking compartment.
- To help prevent injury, follow all the standard precautions for opening the cooking compartment door and reaching into the cooking compartment.

Failure to do so can result in death, burns, and scalds.

CHAPTER 4 COOKING

⚠ CAUTION

Press switches and keys with fingertips only.
Injury and equipment damage can result from pressing switches and keys with anything else.

A. QUICK REFERENCE LIGHTING AND SHUTDOWN SUMMARY INSTRUCTIONS

- **The following START-UP and SHUTDOWN SUMMARY is for quick reference ONLY.**
- **For safe operation and use of this equipment, the operators must comply with all safety and operating instructions in this manual.**

Lighting

1. Close the cooking compartment doors.
2. Refer to Spec sheet.
   - For **Timer** controls: Set the mode to Timed and the Timers to 0 minutes.
3. Turn ON the ON/OFF switch. See Figure 4-1.
   - The steam generator fills with water in about 6 minutes.
4. Turn ON one or both cooking compartments.
   - ON/OFF controls: Turn ON.
   - Dial Timer: Set to Manual Mode OR set a time in Timed Mode.
   - Keypad Timer: Set a time and press the START/STOP key.
5. The blower starts and the pilot attempts to light for 90 seconds.
   - If no ignition occurs, the system will reset in 6-7 minutes.
   - To manually reset the system: Turn the ON/OFF switch OFF for 5 minutes and then back ON.
6. Cook as usual.

Shutdown

1. Open the cooking compartment doors.
   - If water runs out of the steam ports during blowdown, call for service at once.
2. Turn OFF the ON/OFF Switch.
3. The drain opens, the automatic blowdown cycle starts, and the controls de-energize.
4. Wait for the 3-minute automatic blowdown cycle to run.
5. Clean as usual.
6. Leave the cooking compartment doors open to help increase gasket life and help prevent odor buildup.

B. CONTROL PANEL SWITCHES

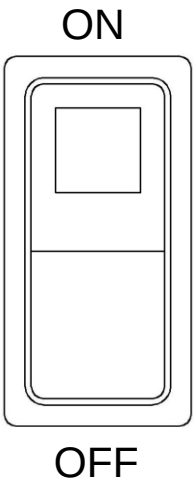

Figure 4-1

1. POWER ON and GENERATOR FILL Switch with Power On Indicator Light

- This is the ON/OFF switch.
- Turn this switch ON to power the control panel and fill the steam generator.

C. OPERATING AND COOKING PROCEDURE

⚠ CAUTION
Some foods drip juices. Use a solid catch pan under perforated pans when steaming food that may drip juices. Failure to use a catch pan can cause clogged drain screens and drains.

1. Inspect and clean the drain and the cooking compartment as required. See Chapter 3.
2. Preheat: If necessary, preheat the cooking compartment.
   a. Turn ON the appliance by following the Lighting instructions.
   b. Close the cooking compartment doors.
   c. Steam for 5 minutes.
   d. Cook as usual.
3. Cook:
   a. Slide pans of food into the slide racks in the cooking compartment
   b. Do not place pans or anything else on the bottom of the compartment.
   c. See “Timed Mode” and “Manual Mode,” and the Control Panels (refer to spec sheet) as required.
4. After Cooking:
   a. If the appliance will be used again in a few minutes, shut door to maintain cooking compartment temperature.
   b. If another use is not planned for more than half an hour, leave the cooking compartment door open slightly.
   c. If the appliance will not be used again during this shift, go to Chapter 5, “Cleaning.”

D. TIMED MODE – OPERATING AND COOKING PROCEDURE

1. Set the TIMED/MANUAL switch to TIMED.
2. Set the cooking time.
3. When the Timer reaches zero and the buzzer sounds, open the cooking compartment door, and remove the pans from the slide racks.

E. MANUAL MODE – OPERATING AND COOKING PROCEDURE

- In Manual Mode, the Operator starts and stops steaming operations.
- Use Manual Mode for:
  - Maintaining cooking compartment temperature between cooking batches.
  - Continuous supply of steam.

1. Set the TIMED/MANUAL switch to MANUAL. Steaming starts at once.
2. To stop Manual Mode steaming:
   a. Turn the timer OFF or set it to ZERO.
   b. Press the TIMED end of the TIMED/MANUAL rocker switch.
3. When the food is ready, open the cooking compartment door, and remove the pans from the slide racks.

F. DIAL TIMER CONTROL PANEL

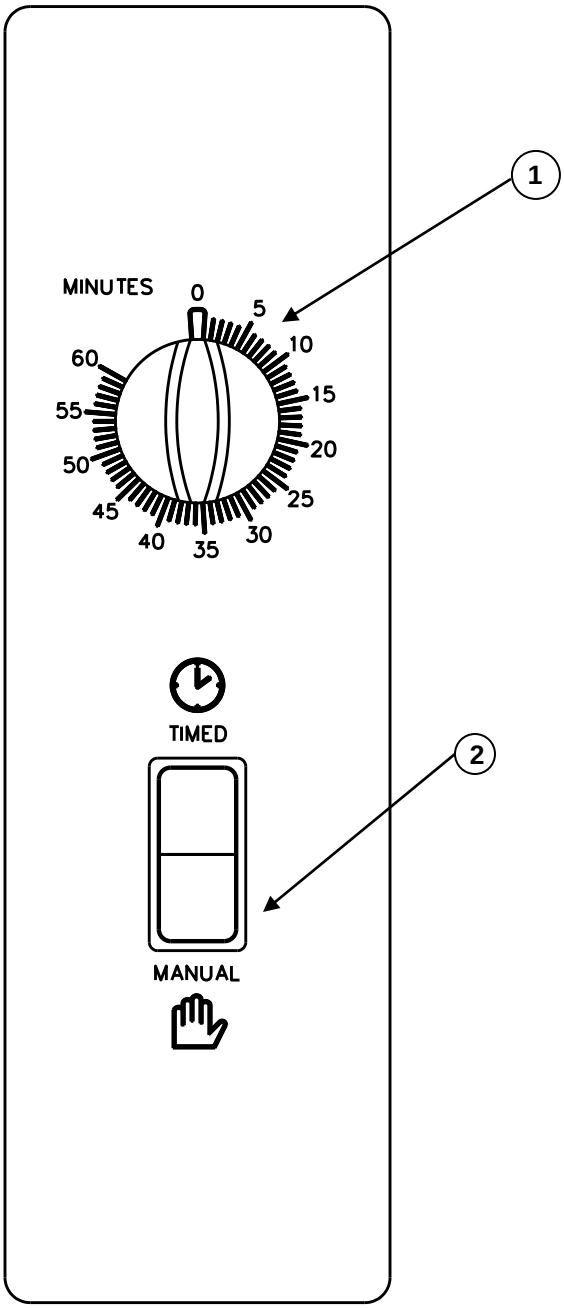

Figure 4-4

1. TIMER

- The Dial Timer sets the operating time from 0 to 60 minutes.
- Turn the knob clockwise until it points to the required time.
- When the Timer reaches 0, a buzzer sounds for 3 seconds.
- The Dial Timer does **NOT** work in Manual Mode.

2. TIMED/MANUAL Switch

- The TIMED/MANUAL switch selects the Timed or Manual Mode.

G. KEYPAD TIMER CONTROL PANEL

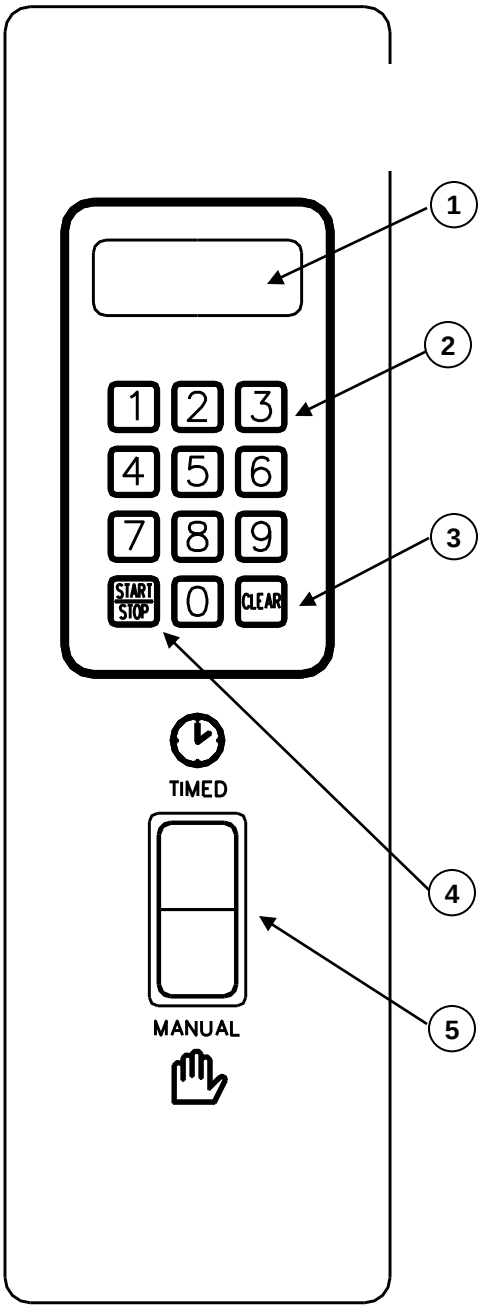

Figure 4-5

1. TIMER Display

- This four-digit display shows the minutes and seconds remaining in the countdown.
- The display reads from zero (00:00) to 99 minutes and 99 seconds (99:99).
- Pause (PAUS) appears when the count down is stopped by the START/STOP key or by the temperature compensating circuit.

2. Number Keys 0-9

- These keys set the number of minutes and seconds in the timer count down.
- Example: Pressing the number keys 1, 2, 3, 4, sets the timer for 12 minutes and 34 seconds (12:34).

3. CLEAR Key

- Press and hold this key for 5 seconds to zero (00:00) the timer after it has been stopped.
- The Timer must be reset to zero (00:00) (“zeroed”) by pressing this key before a new time can be set.

4. START/STOP Key

- Press this key to start and stop the Timer.
- Press and hold for 5 seconds to stop functions.
- In TIMED mode, press this key to start and stop both the Timer and steam flow.
- In MANUAL mode, the steaming functions are independent of the Timer.
- Press this key to silence the buzzer.

5. TIMED/MANUAL Switch

- The TIMED/MANUAL switch selects the Timed or Manual Mode.

Note: Using the KEYPAD Timer in Manual Mode:

- The Timer does NOT start or stop steaming in Manual Mode.

1) Set and start the Timer.
2) The KEYPAD Timer counts down only when the cooking compartment is at cooking temperature.
3) The buzzer sounds when the Timer reaches zero.

CHAPTER 5 CLEANING

A. STEAM GENERATOR BLOWDOWN

1. Power Off

- When the appliance is turned OFF at the ON/OFF switch, blowdown starts automatically. The generator is drained, and the drain valve is rinsed with fresh water to help prevent scale.

2. Blowdown Frequency

a. Based on the water quality analysis done before installation, and the amount of use, make, and post a blowdown schedule.

- Contact your qualified Cleveland Range authorized service agency or Cleveland Range for more information about maintenance scheduling, products, and services.

b. Blowdown Schedule Guidelines:

1) When using water that does not meet the minimum water quality standards (see the Warranty), blowdown must be performed after every 4 hours of operation, or more frequently as required, and at the end of each shift.

2) For appliances using water that meets the minimum water quality standards, blowdown must be performed at the end of each shift.

3. Blowdown Procedure

a. Follow the Shut Down instructions in Chapter 4.

b. **EITHER** restart the appliance by following “Lighting” instructions in Chapter 4, **OR** if the appliance will not be used again this shift, go to “Shut Down and Cleaning.”

B. SHUTDOWN AND CLEANING

- **Perform the Shutdown and Cleaning Procedure at the end of each shift or more often if needed.**

⚠WARNING

ELECTRIC SHOCK HAZARD
Do not clean this appliance with hoses or water jets!
Doing so can cause injury and equipment damage.

⚠ DANGER

HIGH HEAT HAZARD
Wait for this appliance to cool before cleaning!
Attempting to clean a hot appliance can cause
DEATH, INJURY, BURNS, and SCALDS.

Shutdown and Cleaning Procedure for the End of Each Shift:

1. Follow the Shutdown instructions in Chapter 4.
2. Open the cooking compartment doors and allow the appliance to cool.
3. Remove the slide racks. Wash, and rinse them according to health and sanitation requirements.
4. Remove spilled food from inside the compartments. Use a soft bristle brush to remove stuck food.
5. Clean but do not remove the drain screens.

6. Clean the interior of the compartment thoroughly.
   - Do NOT use abrasive cleaning compounds or steel wool.
7. Rinse the inside of the cooking compartments with clean water.
8. Clean the door gasket assemblies:
   a. Remove the door gasket assembly (see Figure 5-1) by holding the gasket assembly at the sides and lifting and away from the door.
   b. Wipe the gasket assembly with a damp cloth.
   c. Wipe the inside of the door with a damp cloth.
   d. Rotate the gasket assembly 180°. This makes the gasket last longer.
   e. Replace the gasket assembly by sliding the retaining pins into the keyhole slots.

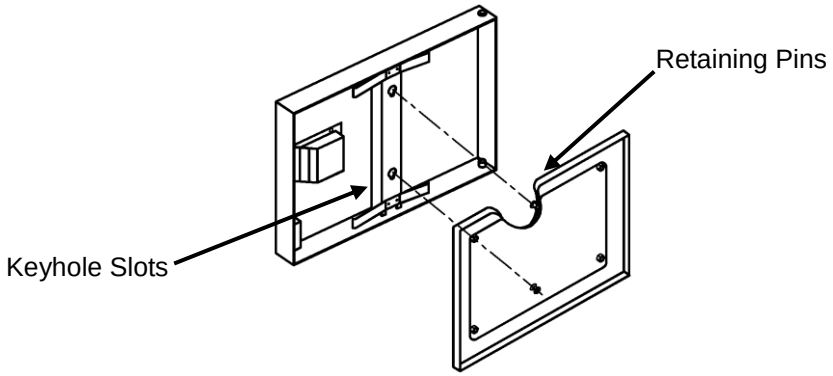

Figure 5-1
Door Gasket Assembly

9. Replace the cleaned slide racks.
10. Wipe the exterior with a damp cloth.
11. Leave cooking compartment doors open until the next use to help prevent compartment odor buildup and help increase gasket life.

CHAPTER 6 GENERAL INSTALLATION INFORMATION

A. Inspect for Shipping Damage

- If the appliance is damaged or damage is suspected:
  1. Submit a Damage Claim to the Shipper immediately.
  2. Inform your dealer at once.
  3. Inform Cleveland Range in writing within three (3) days.

⚠ DANGER

Operating this appliance out of level can cause DEATH, INJURY, and EQUIPMENT DAMAGE.
This appliance must be level both front-to-back and side-to-side in all installations.
NEVER operate this appliance out of level.
If this appliance is suspected to be out of level, shut it down at once and call your qualified Cleveland Range authorized service agency immediately.

CHAPTER 7 INSTALLATION

A. Select a Location

1. For safe and efficient operation:
   a. Installation must comply with <u>all</u> local fire and health codes.
   b. The location selected must be capable of supporting this appliance.
      - The operating weight of a 24CGA10 is 780 lbs.
   c. Position the appliance so it will not tip or slide.
   d. The operating surface must be level enough to allow leveling with the adjustable legs. This appliance **<u>MUST</u>** be level both front to back and side to side before operation.
   e. A suitable drain must be available within 12 feet of this appliance. Do NOT install the appliance directly over a drain.
   f. The location must include space for Operating and Service/Secondary Clearances and the Exhaust Hood. Refer to spec sheet for more details.

⚠WARNING

All clearance requirements above, below, and around this appliance are the same for non-combustible locations as for combustible locations.
Failure to maintain required clearances and additional distances as needed can result in INJURY and EQUIPMENT DAMAGE.
Consult manufacturers' literature, and sales and service agencies as needed.

   g. KEEP THE APPLIANCE AREA FREE AND CLEAR OF COMBUSTIBLES.
   h. Proper air supply for ventilation and combustion is REQUIRED for and CRITICAL to safe, efficient operation of this appliance.
   i. Make sure the air vents of this appliance are not blocked with or by anything.

j. Allow for sufficient extra distance if a "high heat source," e.g. a broiler, is located next to this appliance. Contact Cleveland Range at 216-481-4900 or 1-800-338-2204 for recommendations.

k. Do NOT install this appliance directly over a drain. Steam rising up out of the drain will adversely affect operation, hamper cooling air circulation, and damage electrical and electronic components.

B. Exhaust Hood Requirements

1. This gas fired appliance must be installed under a suitable ventilation hood as required by the National Fuel Gas Code, ANSI Z223.1/NFPA 54 and ANSI Z83.11-2004 / CSA 1.8-2004.
2. The ventilation hood system must include an interlock to prevent the operation of this appliance without the operation of the ventilation hood.
3. The exhaust hood must extend over the gas flue opening and meet the following requirements:
   a. This gas fired appliance must be vented in accordance with all local, state and national codes for venting gas fired appliances.
   b. The exhaust hood must be sized for the cumulative ventilation requirements of all the gas-fired appliances in the area under the hood, including this appliance.
      - The BTU/HR for a 24CGA10 is 125,000.
   c. If an existing hood does not meet all specifications, a new one must be constructed.
   d. When determining hood size, include operating clearances. Refer spec sheet for more details.

C. Position and Level the Appliance

1. Move the appliance into position.
2. Place a level along the bottom edge of the appliance.
3. Use the adjustable legs of the appliance to level it front-to-back and side-to-side.

D. Slide Racks (Pan Racks)

1. Refer to Figure 3-1. Each rack has four loops: two top, and two bottom. Hold the slide rack so the ends of the hanger loops are towards compartment wall, as shown in Figure 3-1.
2. Slide one rack into compartment with the loop side closest to the compartment wall and rack slots horizontal.
3. Hook the loops over the top and bottom pins
4. Repeat steps a, b, c for the other racks.

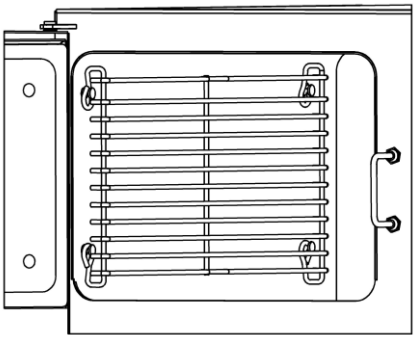

Figure 3-1
Slide Rack Installation

E. Gas Supply

Post instructions to be followed if the user smells gas. Display the instructions in a prominent location. Obtain the instructions from the local gas supplier.

1. Gas Supply Requirements
   - Gas supply type MUST match the type of gas shown on the rating plate.
   - Gas supply pressure must NOT exceed 14” water column (1/2 psi), and fall within the pressure range shown below when using 3/4” NPT line and a 1/2” NPT connection
     - Natural gas pressure at 1000 BTU/CF must be 5 1/2” – 14” water column.
     - Propane gas pressure must be between 11” – 14” water column.
   - If the gas or propane supply pressure exceeds 14” water column, a pressure regulating valve (pressure regulator) must be installed in the gas supply line to reduce pressure to this appliance. See Figure 3-2.

2. Gas Supply Line Requirements

   The Installer/Owner is responsible for furnishing and installing gas supply lines, valves, regulators, and accessories.

   When installing gas supply lines and accessories, observe the following:

   a. Refer to Figure 3-2 for the recommended layout of the gas supply lines.
   b. Use non-hardening pipe thread sealant resistant to LP gas.
   c. The ¾” NPT gas inlet is on the bottom of the 24CGA10. See Figure 3-2
   d. Install main manual shut off valve between the gas supply and the appliance. See Figure 3-2. This main manual shut off valve is called the “Main Manual Gas Valve.”
   e. Install a sediment trap (drip leg) in gas supply line. See Figure 3-2.

Gas Supply Line Layout
Figure 3-2

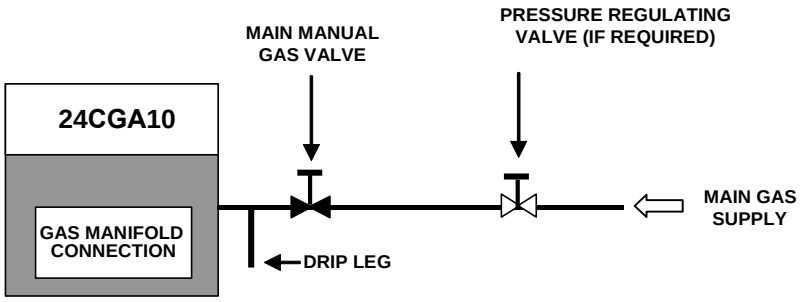

3. Test Gas Supply Lines
   a. Check all connections for proper tightness.
   b. Remove the control side panel to inspect internal gas connections. Do not replace the panel until installation is complete.
   c. Open the gas supply valves.

d. Check all lines and connections for leaks, both inside and outside this appliance, with soap and water solution.
e. All leaks must be corrected before attempting to operate this appliance.

4. Pressure Test Gas Supply Lines

If pressure testing is required, this appliance must be disconnected or isolated from the gas supply piping system during pressure testing as follows:

- The appliance and its individual shutoff valve (Main Manual Gas Valve) must be **disconnected** from the gas supply piping system during any pressure testing of that system at test pressures in excess of 1/2 psi (14" water column or 3.45 kPa).
- The appliance must be **isolated** from the gas supply piping system by closing its individual manual shutoff valve (Main Manual Gas Valve) during any pressure testing of the gas supply piping system at test pressures equal to or less than 1/2 psi (14" water column or 3.45 kPa).

F. Water Supply

1. Water Supply Quality Requirements

NOTICE
The use of good quality feed water as listed in the Cleveland Range Limited Warranty is the responsibility of the Owner-User. See Water Quality Recommendations as listed in the Cleveland Range Limited Warranty. THE USE OF POOR-QUALITY FEED WATER WILL VOID EQUIPMENT WARRANTIES.

a. Contact Cleveland Range for details on how to provide water per Minimum Water Quality Requirements in the Warranty, or how to increase the frequency of maintenance, cleaning, and descaling.
b. Poor water supply quality degrades performance.
c. Check the quality of supply water before designing the water supply by contacting a local water treatment specialist for on-premises water analysis.
d. Softened or chlorinated water damages the steam generator by increasing corrosion. Carbon type filters are required before water enters the steam generator if supply water is softened or chlorinated.
e. If a water treatment system must be installed to achieve acceptable water quality, install it **BEFORE** connecting the water supply lines.
f. If analysis shows that supply water is below Minimum Water Quality:
    - a water treatment system and/or carbon filter must be installed in the line feeding the steam generator.

2. Connect the Water Supply Lines

- The Installer/Owner is responsible for the water connection of this appliance.
- This appliance is to be installed to comply with all applicable federal, state, or local plumbing codes.
- **Connect this appliance to COLD WATER** The condenser system and steam generator will not work properly if they are connected to HOT or WARM water.

a. Water supply must have a minimum dynamic (flow) pressure of 35 psi (2.4 kg/cm²) and a maximum static pressure of 60-psi (4.1 kg/cm²).

b. If the static pressure is above 60 psi, a pressure regulator must be used and set at approximately 50 psi. Pressure above 60 psi can damage solenoid valves. See Figures 3-3 and 3-4.

c. If the supply water meets the requirements shown in the Warranty, then the Single Water Supply Arrangement shown in Figure 3-3 may be used.

   1) If using the single water supply arrangement: The supply piping to the tee fitting must be at least the next larger size of pipe than the connection provided on the appliance.

d. If the water supply fails to meet the requirements shown in the Warranty, then use the Separate Feed Water Supply Arrangement shown in Figure 3-4.

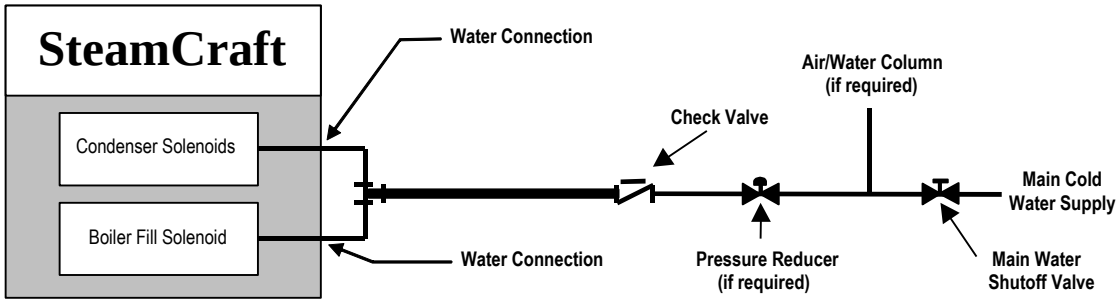

Figure 3-3 Cleveland Range Single Water Supply Arrangement

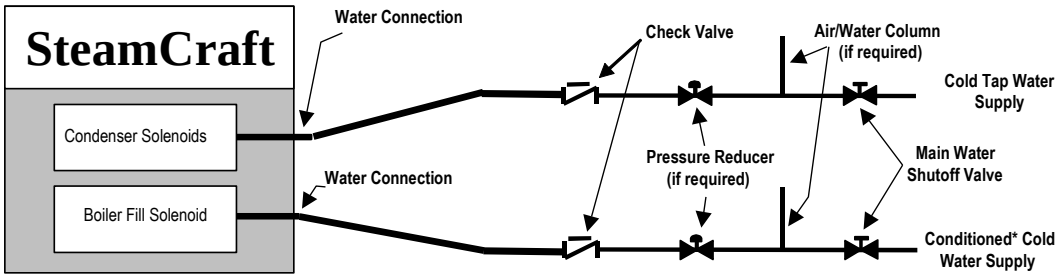

Figure 3-4 Cleveland Range Separate Water Supply Arrangement
*** "Conditioned" indicates water that has been filtered or treated by a Cleveland Range approved method to meet or exceed the water quality standards in the Warranty.**

e. Installation Requirements:

- Apply non-hardening pipe thread sealant to threaded connections.
- The 24CGA10 has two 3/8" NPT female fittings its underside: one for the Boiler and one for the condenser. Refer to spec sheet for exact location.
- Install a manual water shut-off valve (Main Water Shutoff Valve) (not provided) between the cold-water supply line(s) and the appliance.
- The National Sanitation Foundation (NSF) requires installation of a check valve (or other approved anti-backflow / anti-siphon device) (not provided) in all supply lines in accordance with and as required by local, state, and national health, sanitation and plumbing codes.
- Two 40 mesh water strainers (dirt filters), Cleveland Range Part Number 19870, are factory installed.
- Flush the water supply lines before connecting the lines to the appliance.

1) Test Water Supply Lines
   a. Check all connections for proper tightness.
   b. Remove the side panels to inspect the water connections inside the appliance.
   c. Open the water supply valves.
   d. Check all lines and connections for leaks, both inside and outside the appliance.

G. Electric Power Supply

- The electric supply must match all electrical and wiring requirements specified on the rating plate.
- NOTE: This appliance is **NOT** Ground Fault Interrupter (GFI or GFCI) compatible.
- NOTE: The 24CGA10 Electrical Diagram is located inside of the Condensate Drip Trough.

The connection must be made as follows:

1. Install a main disconnect switch and a separate fuse or breaker for this appliance as shown in Figure 3-9. The fused disconnect switch is referred to as the "Main External Power Switch."
2. Do not use a GFI (GFCI) circuit. This appliance is not GFI compatible.
3. **Do NOT use a power cord.**
4. Make the electrical connection using flexible conduit, per local code. See Figure 3-10.

⚠WARNING
This appliance is not GFI (GFCI) compatible. Do not use a GFI (GFCI) circuit. Using a GFI (GFCI) circuit can result in injury, equipment damage, and property damage.

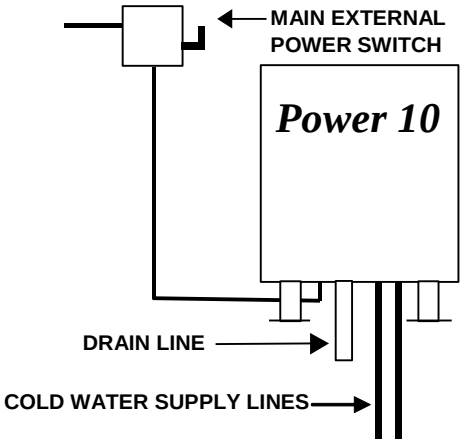

Figure 3-9
Electrical Layout

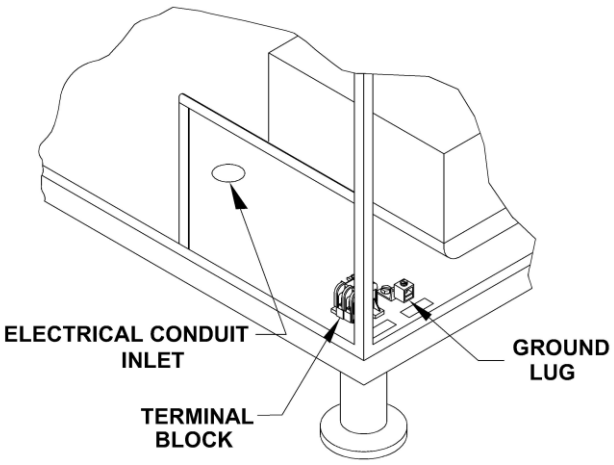

Figure 3-10
Hardwire Connection

H. Free Air Vented Drain Line

⚠ DANGER

DEATH, INJURY, EQUIPMENT and PROPERTY DAMAGE will result from improper installation of drain outlet lines. Install free air vented drain lines as described in this manual.

NOTICE: Furnishing and installing drain lines and drainpipe is the responsibility of the Installer/Owner.

The following restrictions and requirements are critical to the safety of personnel and equipment, and must not be violated under any circumstances:

1. The drain lines must be installed in compliance with the *Food Code* (latest edition) of the Food and Drug Administration (FDA), and any other applicable national, state, or local codes and regulations.
2. The drain line must be free air vented, have gravity flow from the appliance, and terminate outside the perimeter of the appliance.
3. Free air venting requires a minimum 1” clearance between the end of the drain line and the top of the floor drain. Refer spec sheet for more details.
4. Do NOT install the appliance directly over a drain. Steam rising up out of the drain will adversely affect operation, hamper cooling air circulation, and damage electrical and electronic components.
5. Do NOT connect the appliance’s drain connection to any drain material that cannot sustain 180° F.
6. Do NOT connect any other drain from any other equipment to the drain line of this appliance.
7. Do NOT connect the drain outlet extension line directly into a floor drain or a sewer line.
8. Do NOT connect this appliance’s drain directly to drains or to the plumbing of any other equipment.
9. Do NOT install a trap or shutoff in the drain line.
10. **Drainpipe Size and Length Guidelines:**
    - **Do NOT make a drainpipe outlet extension more than 12 feet long.**
    - **Do NOT use more than three elbows.**
    - **Up to 6’ pipe:** 1 1/2-inch pipe and fittings are acceptable.
    - **Up to 2 elbows:** 1 1/2-inch pipe and fittings are acceptable.
    - **6’ to 12’ pipe:** 2-inch pipe and fittings are required.
    - **3 elbows on any extension:** 2-inch pipe and fittings are required.
11. Refer to Figure 1-3 and 2-13: Connect the drain to the appliance.
    a. While assembling the pipes and fittings of the drain outlet extension, use non-hardening pipe thread sealant.
    b. Thread fittings together FINGER TIGHT ONLY! DO NOT USE A WRENCH!

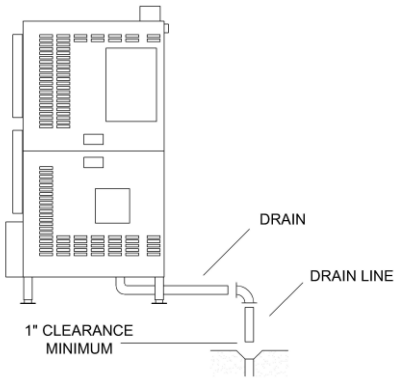

Figure 2-13
Typical Drain Layout

I. Installation Checklist

Installation Check List		
TASK	**REFERENCE Chapter Number**	**COMPLETED (Initial and Date)**
Preparation		
Check Operating Location Clearances	See spec sheet & Ch.7	
Test Supply Water Quality	Warranty, Ch.7	
Water Supply Requirements Met	Ch.7	
Electric Power Requirements Met	Rating Plate, Ch.7	
Gas Supply Requirements Met	Rating Plate, Ch.7	
Exhaust Hood Requirements Met	Ch.7 & See spec sheet	
Installation	Ch.7	
Check Level Front-to-Back and Side-to-Side	Ch.7	
Check Drain Line Connection	Ch.7	
Check Exhaust Hood Function	Ch.7	
Check Electrical Supply Connection	Ch.7	
Check Water Supply Connection	Ch.7	
Leak Test Water Supply Lines	Ch.7	
Check Gas Supply Connection	Ch.7	
Leak Test Gas Supply Connection	Ch.7	

Notes:

CHAPTER 8 STARTUP PROCEDURE

⚠ DANGER

DO NOT TRY TO LIGHT BURNERS WITH A FLAME.
This appliance has an electronic ignition system, which automatically lights burners, senses flame, and controls gas flow.
Burners cannot be lit with a flame.
DEATH, INJURY, OR EQUIPMENT DAMAGE may result from trying to light burners with a flame.

⚠ DANGER

BURN and SCALD HAZARD
Exposure to steam, condensate, and hot surfaces can cause death, burns, and scalds.
To help avoid injury:

- Do NOT breathe steam or condensate.
- Stand on the hinge side and away from the appliance and slowly open the cooking compartment door.
- Open the door slightly to allow steam, condensate, and heat to vent before looking or reaching into the cooking compartment.
- Always wear DRY heatproof gloves when reaching into the cooking compartment or handling hot items. Wet or damp gloves conduct heat and may cause burns when handling hot items.

Failure to follow these precautions can result in death, burns, and scalds.

Problems? See the Installer's Troubleshooting Guide at the end of this manual.

Burner Ignition Test (Lighting and Shutdown Instructions)

NOTE: Perform this test before Startup Test Procedure

NOTE: For new installations, or when air in gas lines is suspected, it may be necessary to bleed the air from the gas lines. Bleed air as close as possible to the inlet of the automatic gas valve.

A. Lighting Instructions (Test of function of pilot light and burner ignition system.)

1. If not already done:
   a. Test the water supply lines. (Leaks and pressure.)
   b. Test the gas supply lines. (Leaks and pressure.)
   c. Check that the ON/OFF valve of automatic gas control valve is in the ON position.
   d. Open the Main Manual Gas Valve.
2. Turn the Main External Power Switch OFF.
3. Control Panel Settings:
   a. MANUAL/TIMED Switch: TIMED. (If dial timer model.)
   b. TIMER DIAL: 0 minutes. (If dial timer model.)
4. Turn ON the electrical power to the appliance at the Main External Power Switch.
   a. When initial power is supplied to the appliance with the ON/OFF switch in the OFF position, a 3-minute automatic blowdown cycle starts.
   b. This cycle stops after 3 minutes OR when the ON/OFF switch is changed to the ON position.
5. Turn ON the electrical power to the appliance at the ON/OFF switch.

a. The red indicator in the ON/OFF switch lights.
b. The steam generator fills with water.
c. The burner does NOT light.

6. Turn ON the ON/OFF switch.
   a. The igniter initiates a spark and gas is supplied to the pilot for 90 seconds.
   b. If the pilot does not light in 90 seconds, then the ignition system locks out.
      - Reset system by waiting 5 minutes OR
      - Turn the ON/OFF switch OFF and back ON.
      - **If the burner does NOT light after two attempts, go to Step 8.**
7. When the burner lights, the steam generator begins heating.
   a. The Heat Standby feature cycles the burners on and off to maintain operating temperature if the cooking compartments are not in use.
      - The Heat Standby Feature will turn the burners on every 6 minutes for 20 seconds as long as the steamer is ON and has water in it and the cooking compartments are off or the appliance is in Timed mode with the Timers at 0.
      - **Do not work near or above the exhaust flue whenever power is on.**
      - **There is no warning to Heat Standby burner ignition.**
   b. The appliance is ready to cook.
      1) End this test here and go to the Shutdown Instructions.
8. If the burner does not light: Wait 5 minutes and then repeat Steps 2-6 up to three more times.
   - **EITHER:** If the burner does NOT light after repeating Steps 2-6 four times, go to the Shutdown Instructions and call a qualified Cleveland Range authorized service representative to adjust the burner controls.
   - **OR:** If the burner lights in four or less tries of Steps 2-6, go to Step 7.

B. Shutdown Instructions

1. Turn OFF the electrical power to the appliance, at both the ON/OFF Switch and the Main External Power Switch.
2. Turn OFF the gas supply at Main Manual Gas Valve.

CHAPTER 9 OPERATING TESTS

Startup Test Procedure for the 24CGA10

This procedure evaluates the function of the operating controls of this appliance.

- This appliance will have one of three control panels: manual dial timer, electronic with a keypad timer control, or ON/OFF. There are some operating differences between these control panels.
- After successfully performing the Startup Procedure, perform the test procedure for the type of control panel on the appliance being installed.

A. Startup Procedure with the Appliance De-Energized.

1. Start with or the Main External Power Switch OFF.
2. Check the fuses or circuit breakers for proper size.
3. Make sure the water supply line valves are open.
4. Make sure the Main Manual Gas Valve is open.
5. Open the cooking compartment doors.
   - Check for proper installation of drain screens, slide racks, and door gasket assemblies.
   - Check that the drains are not blocked.
6. Shut the cooking compartment doors.
7. Control panel settings:
   a. TIMED/MANUAL switch to TIMED.
8. Go to B. “Boiler Drain and Rinse Cycle Inspection.”

⚠WARNING

BURN and SCALD HAZARD

If the drain is blocked, hot water can collect inside the cooking compartment and spill out when the door is opened.
Water leaking from the door gasket can be a sign of a blocked drain.
When checking inside the steamer: always open the door slowly and stand to the hinge side and away from the steamer.
BURNS and SCALDS can result from hot water spilling out.

⚠ DANGER

ELECTRIC SHOCK HAZARD
DEATH, INJURY, or EQUIPMENT DAMAGE can result from touching any component inside this appliance when the power is connected.
Whenever possible disconnect the power while installing, servicing, or testing this appliance.
When installation, service, or tests require power to be connected to this appliance: use extreme caution and every possible precaution and safety measure while testing or servicing this appliance.

B. Generator Drain and Rinse Cycle Inspection (3-minute Blowdown Cycle)

1. Turn OFF the Main External Power Switch.
2. Turn OFF the ON/OFF switch.
3. Turn ON the Main External Power Switch start the 3-Minute Blowdown Cycle.
   a. Watch for plumbing leaks:
   b. If there are leaks:
      1) Turn OFF the Main External Power Switch.
      2) Repair leaks.
      3) Start this test over.
4. The automatic blowdown cycle opens the fill and rinse valves.
5. The drain valve remains open.
6. The drain valve and water column float assembly are flushed with fresh water.
7. Stop the blowdown cycle before it is complete by turning the ON/OFF switch ON.
   a. The operating controls energize
   b. The red ON indicator in the ON/OFF switch lights.
   c. Blowdown stops
   d. The steam generator fills.
8. Start a 3-minute blowdown cycle by turning the ON/OFF switch OFF.
9. A steady stream of water flows from drainpipe into the floor drain.
10. No water flows into the cooking compartment.
11. After the 3-minute blowdown cycle ends, no water flows into the float column or out of the drainpipe.
12. **Go to C**. “Operating Test Procedures.”

C. Operating Test Procedures

1. Turn OFF the Main External Power Switch.
2. Turn OFF the ON/OFF switch.
3. Turn ON the Main External Power Switch.
   a. The 3-minute blowdown cycle starts.
   b. Turn the ON/OFF switch ON.
      - The red ON indicator in the ON/OFF switch lights.
      - The automatic blowdown cycle stops.
   c. Start a manual steaming cycle.
      1) ON / OFF MODELS: Set the COMPARTMENT STEAM selector switch to ON.
      2) TIMER or KEYPAD MODELS: Set the TIMED/MANUAL selector switch to MANUAL.
      3) The condenser solenoid clicks open, condenser flow starts, and water flows from the drainpipe.
         - If no water flows from the drain: make sure the condenser water supply valve is open and the water lines are connected properly.
   d. Water rises in the sight glass.
   e. When water reaches the safety level sensor, steam enters the cooking compartment after 5 to 7 minutes.
      - Water may drip from the nozzles until steam clears the lines.
   f. The cooking compartments steam until turned OFF or set to TIMED mode with the timer zeroed.

g. Check for steam leaks around the door gasket.
h. Leave the ON/OFF switch in the ON position.
i. Set the controls to stop steaming:
   - TIMER MODELS: Set the Timer to 0 (zero) minutes.
j. If the control panel **does not have a timer**, complete Step l.
   - If the control panel **has a timer or a Door Interlock Switch,** skip Step 2. and go to the appropriate test(s).
   1) Turn the appliance OFF using the ON/OFF switch:
      - The red indicator in the ON/OFF switch turns OFF.
      - Automatic blowdown starts and runs for 3 minutes.
   2) After blowdown ends:
      a) Turn OFF the Main External Power Switch.
      b) Replace all panels and sheeting.
      c) Turn ON the Main External Power Switch.

D. Timer Test for <u>Dial Timer</u> Control Panel

1. Set the TIMED/MANUAL switch to MANUAL and let the appliance continue steaming.
2. Zero the Timer by turning the dial counterclockwise until it points to 0 (zero).
   Note: The buzzer will NOT sound in Manual Mode.
3. Set the TIMED/MANUAL switch to TIMED.
   a. The buzzer sounds for 3 seconds.
   b. Steaming stops.
   c. Condenser flow stops.
4. Open the cooking compartment doors, and
   a. Let the steam vent.
   b. Let the cooking compartments cool for 3 minutes.
5. Close the cooking compartment doors.
6. Turn the timer dial to 10 minutes.
   - The cooking compartments begin to heat.
7. The condenser solenoid clicks open, condenser flow starts, and water flows from the drainpipe.
8. The Boiler makes steam, and
   - The fill valve solenoid clicks and the fill valve opens and closes.
   - The water in the sight glass rises and falls as the Boiler and the fill valve operate.
9. The Timer counts down to 0 (zero), and
   a. Condenser flow stops.
   b. The buzzer sounds for 3 seconds.
   c. Steaming stops.
10. Turn the ON/OFF switch to OFF:
    a. The red indicator turns OFF.
    b. The automatic blowdown cycle starts.
    c. The automatic blowdown cycle ends after 3 minutes.
    d. After blowdown ends:
       (1) Turn OFF the Main External Power Switch.
       (2) Replace all panels and sheeting.

(3) Turn ON the Main External Power Switch.

E. Timer Test for <u>Keypad</u> Control Panel

1. Set the TIMED/MANUAL switch to MANUAL and let the appliance continue steaming.
2. Zero the timer: Press and hold the CLEAR key until the timer reads 00:00
3. Set the TIMED/MANUAL switch to TIMED.
   a. Open the cooking compartment doors, and let the steam vent.
   b. Let the cooking compartments to cool for 3 minutes.
4. Close the cooking compartment doors.
5. Set the TIMED/MANUAL switch to TIMED.
   a. Press the number keys 1, 0, 0, 0
   b. The display reads 10:00 (ten minutes and zero seconds).
6. Press the START/STOP key.
   - The timer reads “PAUS” (pause).
   - The cooking compartments begin to heat.
7. The timer reads “PAUS” (pause) until cooking temperature is reached (193°F).
8. The steam generator makes steam and
   - The fill valve solenoid clicks the fill valve open and closed.
   - The water in the sight glass rises and falls as the steam generator and the fill valve operate.
9. The condenser solenoid clicks open, condenser flow starts, and water flows from the drainpipe.
10. The timer counts down to 00:00 (zero), and
    a. Condenser flow stops.
    b. The buzzer sounds until the START/STOP key is pressed.
    c. Steaming stops.
11. Turn the ON/OFF switch OFF.
    a. The red indicator in the ON/OFF switch turns OFF.
    b. The automatic blowdown cycle starts.
    c. The automatic blowdown cycle ends after 3 minutes.
    d. After blowdown ends:
       (1) Turn OFF the Main External Power Switch.
       (2) Replace all panels and sheeting.
       (3) Turn ON the Main External Power Switch.

F. General Information about the Steam Shut Off Switch

- The cooking compartments of the 24CGA10 equipped with Steam Shut Off Switches (automatic steam cutoff switches) turn OFF the production of steam to a cooking compartment when the door to that compartment is opened.

⚠ DANGER

BURN AND SCALD HAZARD WARNING FOR STEAMERS WITH OPTIONAL COMPARTMENT DOOR STEAM SHUT OFF SWITCH (SCS):

COMPARTMENT DOOR STEAM SHUT OFF SWITCHES ARE <u>NOT</u> INSTANT OFF!!!

- Even though the release of steam from the boiler ends as soon as a door is opened, residual steam in the system may take up to a minute to clear from the steam lines and the cooking compartment.
- To help prevent injury, follow all the standard precautions for opening the cooking compartment door and reaching into the cooking compartment.

Failure to do so can result in death, burns, and scalds.

- If a cooking compartment is opened and the other left closed, the closed cooking compartment continues to steam as normal.

⚠WARNING
BURN and SCALD HAZARD Residual steam in the system may take up to a minute to clear from the steam lines and the cooking compartment. Always wait until this residual steam has cleared before reaching into the cooking compartment. Reaching into a cooking compartment while steam is being released or clearing the steam lines can cause BURNS and SCALDS.

G. Function Test for the Steam Shut Off Switch

- Perform this test after the appliance passes Initial Setup, Blowdown Inspection, and Operating Test, and the appliance is ready for use.

1. Start the appliance with both cooking compartments in MANUAL mode.
2. Wait for the cooking compartments to reach cooking temperature, indicated by the SureCook light going out (Timer models) or “PAUS” disappearing from the Timer Display (Keypad models).
3. Stand to the hinge side and back from the upper door and carefully open the upper door.
4. Steaming stops within a minute.
5. If steaming does not stop within a minute: Shut down the appliance and call your qualified Cleveland Range authorized service representative.
6. Leave the upper door open and let the cooking compartment cool for three minutes.
7. Close the upper compartment door. Steaming starts and the cooking compartment reaches cooking temperature, and the SureCook light goes out (Timer models) **OR** “PAUS” disappearing from the Timer Display (Keypad models).
8. If steaming does not start: Shut down the appliance and call your qualified Cleveland Range authorized service representative.
9. Repeat this test with the lower cooking compartment door.
10. Repeat this test with both cooking compartment doors at the same time.

CHAPTER 10 PREVENTATIVE MAINTENANCE

A. General Information

- Follow the maintenance instructions and schedules to help keep the appliance working properly.
- Increase the frequency of maintenance as needed depending on use and water quality.
- Contact your qualified Cleveland Range authorized service agency or Cleveland Range for more information about maintenance scheduling, products, and services.

B. Maintenance and Service Records

1. Make a file just for maintenance records.
2. Keep a written record of daily, weekly, monthly, and yearly maintenance, service, and repair. Each record must include at least:
    - The date of the service, maintenance, or repair.
    - A description of the service, maintenance, or repair performed.

- Copies of purchase order(s) and invoice(s) for repair parts and service, maintenance, or repair. Include part numbers, if applicable.
- The name and signature of the person performing the service, maintenance, or repair.

C. Daily Maintenance

1. Blowdown

- Blowdown the steam generator. Follow the instructions in Chapter 5.

2. Clean the Appliance

- Clean the interior and exterior of the appliance. Follow the instructions in Chapter 5.

D. Weekly Maintenance

1. Clean the Cooking Compartment Drains

- Blockage of the drain line can cause pressure buildup in the compartment(s) resulting in steam leaks around the door gasket(s), reduced performance, and compartment implosion.

2. To inspect the drain screens and the drain lines for blockage:

a. Clean the cooking compartment and drain screens. Follow the instructions in Chapter 5.

b. Rotate the drain screen 90 degrees to inspect the drain opening.

c. Clean the opening and put the screen back into their operating position.

d. Pour a quart of water into the cooking compartment. If the water drains slowly or stands, clean the cooking compartment drains with a NSF/FDA approved drain cleaner.
   - Follow the instructions of the drain cleaner manufacturer.
   - Flush the cooking compartments and drains with clean water.

E. Monthly Maintenance

1. Descale the Steam Generator

- Steam Generators should be descaled once a month, or more often depending on scale buildup.
- Note the date of descaling in your maintenance and service records to help keep Steam Generator descaling on schedule.

2. SteamCraft Ultra 10 Descaling Procedure Using the Descaling Pump System

- Cleveland Range recommends that your service agency descales your 24CGA10.
- If you have trained and skilled in-house maintenance personnel, you may wish to discuss purchasing Descaling Pump System P/N: 1071421 for use with Dissolve® Descaler Solution P/N 106174 with your sales representative or service agency.
- Use no other system of descaling.

3. Manual Method to Descale Steam Generator

NOTE: Part No. 106174 is the Part No. for a case (6 1-gallon containers) of *DISSOLVE*® descaler..

THESE INSTRUCTIONS ARE FOR USE WITH *DISSOLVE*® DESCALER SOLUTION Cleveland Range Part Nos. 106174.

- **Health Hazard Data, Effects of Overexposure**
  - This product may cause a burning sensation to eyes or skin.
- **Emergency and First Aid Procedures**
  - In case of eye contact, immediately flush eyes with plenty of water.
  - If irritation persists, seek medical attention. In case of skin contact wash with soap and water.

- If inhaled, remove to fresh air and if burning persists, call a physician.
- If swallowed, drink 1 or 2 glasses of water and call a physician.

- **Spill or Leak Procedures**

- Rinse with plenty of water to dilute.
- Sodium carbonate or calcium carbonate may be used to soak up liquid.
- Considered non-hazardous, spent material may be disposed of in a sewer system with water flush.

⚠ CAUTION

Do not use any other product or method of descaling other than the *DISSOLVE*® Descaler method using Part No. 106174.

⚠ WARNING

Descaling procedure is slightly different depending on model. This entire procedure should be read and fully understood as it applies to the model being descaled, before beginning descaling operations.

⚠ DANGER

The liquid solution in Cleveland Range Descaler Solution Part No. 106174 or 1061741 can be harmful if not handled properly. Follow these basic safety rules for handling and using this product. Instructions and warnings on container labels supersede all other warnings and instructions.

Wear protective clothing when mixing or applying chemical cleaners

Wear rubber gloves, and OSHA approved eye protection when descaling

Avoid breathing fumes

If liquid contacts skin: wash with soap and water and seek medical attention.

If chemical contacts eyes: flush with water and seek medical attention

If chemical is swallowed or ingested: drink 1 or 2 glasses of water and seek medical attention

<u>NOTICES</u> regarding the Manual Descaling Procedure for SteamCraft® Ultra 5 and Ultra 10

- Cleveland Range recommends DISSOLVE® Descaler Solution, Part No. 106174.
- Use no other system of steamer descaling
- Appropriate warnings and safe handling procedures must be provided to handlers and users
- Instructions and warnings on Dissolve® containers and Material Safety Data Sheets supersede and replace instructions and warnings in this manual

- General precautions: wear rubber gloves, splash goggles and other protective clothing and equipment as necessary. Refer to Dissolve® container labels and Material Safety Data Sheets for information regarding eyewash, first aid, medical treatment, and spill control.

4. Descaling Procedure

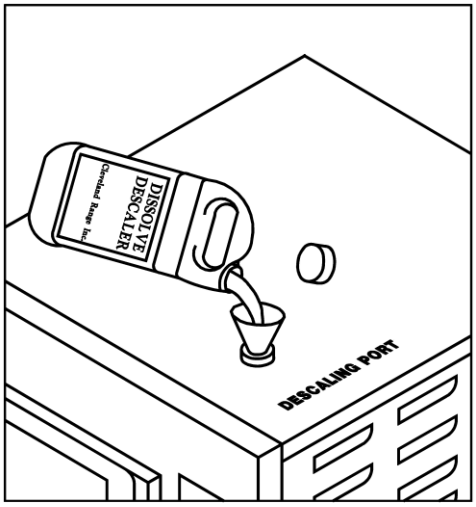

Figure 6-1
Descale Port

1) Turn steamer OFF and open door(s)
   - 3 minute Automatic Blowdown cycle runs
2) Turn steamer ON
   - Generator begins to refill
3) Press TIMED end of TIMED/MANUAL switch (or for ON/OFF Models put the ON/OFF selector Switch in the OFF Position)
4) DO NOT start timer, **DO NOT HEAT APPLIANCE**
   - Water must be cold for descaling
   - Open cooking compartment door(s)
   - Leave cooking compartment door(s) open
5) Remove descaling port cap (see Figure 6-1)
6) Add required amount of Dissolve® through the descale port while generator refills
   - Pour slowly to avoid overflow
   - Refill can take up to 8 minutes
   - Use 1 gallon Dissolve® for Ultra 5 gas
   - Use 1 ½ gallons Dissolve® for Ultra 10 gas
7) Add 1-2 gallons of cold tap water to descaling port after refill stops; continue to fill with cold water until descaling solution enters cooking compartment(s) through steam nozzles
   - Note: Some descaling solution will flow from drain of Ultra 10 gas steamers
   - Adding extra water to generator(s) raises descaling solution to higher than normal water fill level, allowing descaling solution to clean sensors and surfaces above normal water fill level
8) Let descaling solution soak in generator(s) for 1 hour
9) After 1 hour, turn ON/OFF switch OFF to start 3 minute Automatic Blowdown
   - This drains and rinses generator(s)
10) After Automatic Blowdown ends, turn ON/OFF switch to ON
11) Add cold tap water through descaling port after generator refills, until water enters cooking compartment(s) through steam nozzles
    - This raises the water level to rinse the surfaces cleaned in Step 8
12) Turn ON/OFF switch OFF to start 3 minute Automatic Blowdown to rinse generator
13) Replace descaling cap and close cooking compartment door(s)
14) Turn TIMED/MANUAL switch to TIMED
15) Turn steamer ON/OFF switch to ON and set TIMER for 20 minutes
    - For Keypad Timer models: Press START/STOP key to begin the cook cycle
    - For ON/OFF models: Turn the steamer ON for twenty minutes
16) After the timer counts down, turn ON/OFF switch to OFF to start Automatic Blowdown

17) Descaling is complete, resume normal startup, cooking, and shutdown procedures

F. Yearly Maintenance

1. Clean the Water Line Strainer

- Clean the water line strainer <u>at least</u> once a year.
- When first installed, check the strainer more frequently to find out how often it must be cleaned.

a. Close the valve(s) in the water supply line(s).

b. Unscrew the filter cap from the bottom of the strainer.

c. Remove the filter screen and wash it with clean water.

d. Check the O-ring for wear and replace if necessary.

e. Put the screen back in the cap

f. Put the cap back in the strainer.

g. Open the water supply valve(s) and check for water leaks.

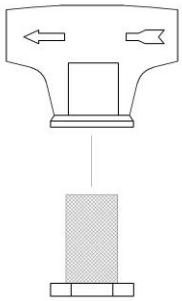

Figure 6-1
Water Line Strainer
Actual sizes and proportions may vary.

CHAPTER 11 TROUBLESHOOTING GUIDE

The Troubleshooting Guide is a list of symptoms of problems that may occur during routine operation.

- “Problem” (left column) lists common operating problems.
- “Possible Cause” (center column) lists causes of problems in the order they should be checked.
- “Remedy / Reference” (right column) lists fixes for problems from easiest to hardest.
- “Notes” in “Remedy / Reference column are at end of the Troubleshooting Guide.

ATTEMPTING TO REPAIR OR CORRECT PROBLEMS REQUIRING A QUALIFIED CLEVELAND RANGE AUTHORIZED SERVICE REPRESENTATIVE VOIDS THE WARRANTY

Trouble Shooting Guide

PROBLEM	POSSIBLE CAUSE	REMEDY/REFERENCE
Power indicator light does not turn ON when ON/OFF switch is in the ON position	Power turned OFF at main external power switch or breaker	Turn ON power at main external power switch or breaker
	Inoperative controls or failed light	See Note 1
Power ON but steam generator does not fill	Water supply to steamer shut off	Open water supply valves
	Water line strainer and/or external filter system is clogged	Clean water supply strainer and/or filter system
	Inoperative solenoids or controls	See Note 1
Control panel POWER indicator light ON and steamer does not make steam in MANUAL or TIMED modes	Water supply to steamer shut OFF	Open water supply valves
	Door interlock switch not engaged or has failed (if unit has this option)	Close door completely If problem persists, see Note 1
	Water line strainer and/or external filter is clogged	Clean water supply strainer and/or external filter system
	Gas supply valve is closed	Open gas supply valve
	Inoperative controls or solenoid	See Note 1
Abnormal amount of steam coming from drain	Hot water instead of cold water connected to condenser fitting	Make proper connections See section on Water Supply
	Water supply to condenser turned OFF	Open water supply valve
	Condenser water line strainer and/or nozzle clogged	Clean out condenser water supply strainer and/or nozzle
	Water supply line to condenser blocked, broken, or leaking	Repair or replace water supply line See Note 1
	Inoperative controls or solenoids	Turn OFF electricity at main external power switch See Note 1
Power light is ON, but timer does not light (Electronic Timer models only), no display	Timer transformer has failed	See Note 1
	Inoperative controls	See Note 1
Compartment bottom dirty with food drippings	Juices and/or food leaking from pans	Put a solid pan under perforated pans to catch drippings, or put less food in pans and clean daily
Reduced Steam flow into cooking compartment	Steam generator scale buildup	Descale steam generator with Cleveland Range approved descaler
	Gas inlet pressure low	See Note 2

	Inoperative or improperly adjusted controls	See Note 1

(Continued On Next Page)

Trouble Shooting Guide
(Continued)

PROBLEM	POSSIBLE CAUSE	REMEDY/REFERENCE
Water leaking from bottom of cabinet	Broken or loose plumbing inside steamer cabinet	Turn OFF electricity at main external power switch and close water supply valve(s) See Note 1
Steam and / or water draining around compartment door **See Warning under Note 9**	A small amount of water condensing around the door is normal	No action necessary
	External drain not properly installed, should be free-air vented and pitched down.	See Notes 2 and 3
	External drain is blocked or restricted	Clean external drain See Note 3
	Door gasket or door parts worn	See Note 1
	Inoperative controls inside cabinet	Turn OFF power at main external power switch See Note 1
Water leaking from water pipes or drain lines	Plumbing needs repair	See Note 3
ON/OFF Indicator ON but steamer does not make steam in timed mode	Inoperative timer control or damaged wiring	See Note 1
Water is flowing out of steam ports into cooking compartment **See Warning under Note 9**	Water probes are dirty	Turn OFF water supply to steamer and descale steamer manually with Cleveland Range approved descaler See Operators Manual for instructions If condition persists see Note 1
	Inoperative controls or solenoid	See Note 1
Water coming from drain even when not cooking	Unit is equipped with mineral purge cycle option	If only a small amount of water is coming intermittently from drain, this is normal operation
	Condenser valve is bad	See Note 1
	Drain solenoid is stuck partway open	Turn OFF power to blowdown steamer. If problem persists, see Note 1
Steam flow does not stop when TIMER stops.	Operating in manual mode.	Switch to timed mode for timer to control steam flow.
	Inoperative controls inside cabinet.	Turn OFF power at ON/OFF lever / switch See Note 1
Food takes too long to cook **To verify steamer's proper operation see Note 8**	Pans too close to bottom of cabinet	Put pans in racks near top of cabinet
	Compartment overloaded with too much food	Put less food into pan Use fewer pans
	Food is being cooked in covered solid pans	Remove covering Steam must have direct access to food for cooking to take place

(Continued On Next Page)

Trouble Shooting Guide
(Continued)

PROBLEM	POSSIBLE CAUSE	REMEDY/REFERENCE
Food takes too long to cook (continued) **To verify steamer's proper operation see Note 8**	Food is frozen	Increase cooking times for frozen food
	Suggested cooking times are usually listed for cooking at sea level	Extend cooking times for altitudes above 2000 feet
	Hot water connected to condenser line	Make proper connections See section on Water Supply. See Note 3
	Condenser water is turned OFF	Turn ON water to condenser
	Condenser water line strainer and/or nozzle is clogged	Clean out condenser water supply strainer and/or nozzle
	Steam generator scale buildup	Descale steam generator with Cleveland Range approved descaler
	Inoperative or improperly adjusted controls	See Note 1
Water comes out of descale port	Descale cap is missing	Install descale cap. Descale port must be closed tightly for steamer to operate properly. If missing, see Note 10
	Descale cap is loose	Tighten descale cap. Descale port must be closed tightly for steamer to operate properly
	Descale cap and/or gasket is damaged	See Note 10

NOTES

1. If the problem is inside the appliance, call a qualified Cleveland Range authorized service representative or Cleveland Range. (Please have the model number and serial number ready when calling.) Cleveland Range will not pay for warranty repairs by unauthorized maintenance and repair centers.
2. Proper installation of the appliance is the responsibility of the Owner-User. Refer to the Warranty.
3. Repairs to external plumbing should be done by a Licensed Plumber.
4. To restart the unit, follow the Lighting (Start-Up) instructions in this manual.
5. Repairs to external wiring should be done by a Licensed Electrician.
6. For more information on products and services, contact your nearest Authorized Sales Representative
7. Call Cleveland Range at 216-481-4900 for preventative maintenance programs, descaling kits, descaling information, and water treatment systems.
8. To evaluate whether this appliance operating at normal cooking performance, conduct the Egg Test. NOTE: this test is not valid for pressure steamers.
   a. Place a perforated steam table pan in the middle rack position in the cooking compartment.
   b. Turn ON the appliance and set the selector switch to the Manual Mode (or for ON/OFF models set the selector to the ON position) to start steaming.
   c. Preheat the cooking compartment for 10 minutes.
   d. After the compartment is preheated, follow the instructions below.
      1) Place a fresh egg in a perforated pan and slide the pan into the cooking compartment.
      2) Close the door and set the timer as directed by the size chart.

EGG SIZE CHART	
Egg Size	SteamCraft Steamer
Medium	10 minutes
Large	12 minutes
Extra Large	12 minutes

3) When time is complete, carefully remove the egg and place it in a container
4) Run cold water over the egg for 5 minutes
5) After cooling, crack the eggshell and peel the egg
6) The result is a perfect hard-boiled egg – the appliance is operating normally.

9. When opening a cooking compartment door, especially when water or steam leaks around gasket, heed the warning below:

⚠WARNING

BURN, SCALD AND EQUIPMENT DAMAGE HAZARD

If the drain is blocked, hot water can fill the cooking compartment and spill out when the cooking compartment door is opened.
Signs of blocked drains include steam or water leaks around the cooking compartment door, and reduced cooking performance.
To help avoid injury:

- Stand on the hinge side and away from the appliance and slowly open the cooking compartment door.
- Inspect the drain(s) before each use and clean them if needed.

Failure to follow these precautions can cause burns, scalds, and equipment damage.

10. Order replacement descale caps and gaskets from a Cleveland Range authorized maintenance and repair center.

Every new piece of Welbilt Foodservice equipment comes with KitchenCare® and you choose the level of service that meets your operational needs from one restaurant to multiple locations

StarCare – Warranty & lifetime service, certified OEM parts, global parts inventory, performance audited

ExtraCare — CareCode, 24/7 Support, online/mobile product information

LifeCare – Install & equipment orientation, planned maintenance, KitchenConnect™, MenuConnect®

Talk with KitchenCare® • 1-844-724-CARE • www.mtwkitchencare.com

WELBILT KitchenCare

To learn how Welbilt Foodservice and its leading brands can equip you, visit our global web site at www.welbilt.com, then discover the regional or local resources available to you.

©2016 Welbilt Foodservice except where explicitly stated otherwise. All rights reserved. Continuing product improvement may necessitate change of specifiations without notice.

Commercial Kitchen Equipment Parts

Find more Cleveland equipment resources at

parthubz.com/equipment/cleveland

Need parts or service?

Call 833-700-8006

support@parthubz.com

parthubz.com