Commercial Kitchen Equipment Parts

ELECTROLUX PROFESSIONAL 700XP

Electrolux Professional 700XP User Manual

Provided by PartHubz

parthubz.com

833-700-8006 | support@parthubz.com

Induction cooktops

N7E/N9E

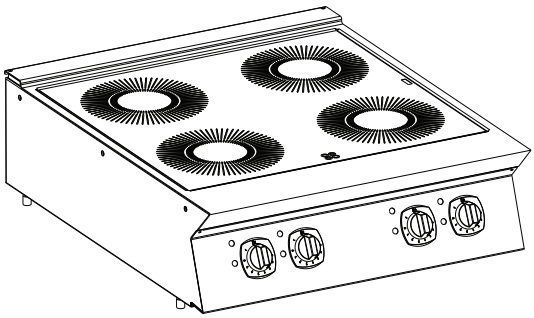

EN Installation and operating manual *

*Original instructions

59589FK02- 2020.04

Foreword

The installation, use and maintenance manual (hereinafter Manual) provides the user with information necessary for correct and safe use of the machine (or “appliance“).

The following must not be considered a long and exacting list of warnings, but rather a set of instructions suitable for improving machine performance in every respect and, above all, preventing injury to persons and animals and damage to property due to improper operating procedures.

All persons involved in machine transport, installation, commissioning, use and maintenance, repair and disassembly must consult and carefully read this manual before carrying out the various operations, in order to avoid wrong and improper actions that could compromise the machine's integrity or endanger people. Make sure to periodically inform the user regarding the safety regulations. It is also important to instruct and update personnel authorised to operate on the machine, regarding its use and maintenance.

The manual must be available to operators and carefully kept in the place where the machine is used, so that it is always at hand for consultation in case of doubts or whenever required.

If, after reading this manual, there are still doubts regarding machine use, do not hesitate to contact the Manufacturer or the authorised Service Centre to receive prompt and precise assistance for better operation and maximum efficiency of the machine. During all stages of machine use, always respect the current regulations on safety, work hygiene and environmental protection. It is the user's responsibility to make sure the machine is started and operated only in optimum conditions of safety for people, animals and property.

IMPORTANT

- The manufacturer declines any liability for operations carried out on the appliance without respecting the instructions given in this manual.
- The manufacturer reserves the right to modify the appliances presented in this publication without notice.
- No part of this manual may be reproduced.
- This manual is available in digital format by:
  - contacting the dealer or reference customer care;
  - downloading the latest and up to date manual on the web site;
- The manual must always be kept in an easily accessed place near the machine. Machine operators and maintenance personnel must be able to easily find and consult it at any time.

Contents

A WARNING AND SAFETY INFORMATION 5
A.1 General information 5
A.2 Personal protection equipment 6
A.3 General safety 6
A.4 Induction general safety 7
A.5 General safety rules 7
A.6 Safety signs to be placed near the machine area 9
A.7 Transport, handling and storage 10
A.8 Installation and assembly 10
A.9 Electrical connection 10
A.10 Machine space limits 10
A.11 Operating limits 11
A.12 Positioning 11
A.13 Reasonably foreseeable improper use 11
A.14 Machine cleaning and maintenance 12
A.15 Machine disposal 13
B WARRANTY 13
B.1 Warranty terms and exclusions 13
C TECHNICAL DATA 14
C.1 Dataplate position 14
C.2 Appliance and manufacturer's identification data 14
C.3 Induction appliance 15
D GENERAL INFORMATION 15
D.1 Introduction 15
D.2 Intended use and restrictions 15
D.3 Testing and inspection 15
D.4 Copyright 15
D.5 Keeping the manual 15
D.6 Recipients of the manual 15
D.7 Definitions 16
D.8 Responsibility 16
E NORMAL USE 16
E.1 Characteristics of personnel trained for normal machine use 16
E.2 Characteristics of personnel enabled to operate on the machine 16
E.3 Operator qualified for normal machine use 16
F INSTALLATION AND ASSEMBLY 17
F.1 Introduction 17
F.2 Customer's responsibilities 17
F.3 Disposal of packing 17
F.4 Joining Appliances 17
F.4.1 Floor fixing 17
F.4.2 Sealing Gaps Between Appliances 17
F.5 Installation limits 18
F.6 Gas, electricity, water and other connections (if present, depending on the appliance and/or model) 18
F.7 Electrical connection 18
F.7.1 Electrical appliances 18
F.7.2 To access the terminal board 18
F.7.3 Power cable 18
F.7.4 Circuit breaker 18
F.7.5 Equipotential node and Earth connection 18
G INSTRUCTION FOR THE USER 19
G.1 Induction models 19
G.1.1 Choice of pots 19
G.1.2 Switching on 19
G.1.3 Cooking advice 19
G.1.4 Switching off 20
H MACHINE CLEANING AND MAINTENANCE 20
H.1 Ordinary maintenance 20
H.1.1 Care information 20
H.1.2 Cleaning the appliance and accessories 20
H.1.3 External parts 20
H.1.4 Ceramic — glass surfaces 20
H.1.5 Induction surfaces 20
H.1.6 Induction air filters 21
H.1.7 Periods of non-use 21
H.1.8 Internal parts (every 6 months) 21
H.2 Warnings 21
H.3 Warnings codes 21
H.4 Inefficiencies detected during cooking 22
H.5 Repair and extraordinary maintenance 22
H.6 Maintenance intervals 22

I MACHINE DISPOSAL..... 23
I.1 Waste storage..... 23
I.2 Procedure regarding appliance dismantling macro operations 23
J ENCLOSED DOCUMENTS..... 24

A WARNING AND SAFETY INFORMATION

A.1 General information

To ensure safe use of the machine and a proper understanding of the manual it is necessary to be familiar with the terms and typographical conventions used in the documentation. The following symbols are used in the manual to indicate and identify the various types of hazards:

WARNING
Danger for the health and safety of operators.

WARNING
Danger of electrocution - dangerous voltage.

CAUTION
Risk of damage to the machine or the product.

WARNING
Danger of magnetic fields.

IMPORTANT
Important instructions or information on the product

Read the instructions before using the appliance

Clarifications and explanations

- Only specialised personnel are authorised to operate on the machine.
- This appliance must not be used by minors and adults with limited physical, sensory or mental abilities or without adequate experience and knowledge regarding its use.
  - Keep all packaging and detergents away from children.
  - Cleaning and user maintenance shall not be made by children without supervision.
- Do not store explosive substances, such as pressurized containers with flammable propellant, in this appliance or close to the appliance
- Do not remove, tamper with or make the machine “CE“ marking illegible.
- Refer to the data given on the machine’s data plate “CE“ marking for relations with the Manufacturer (e.g. when ordering spare parts, etc.).
- When scrapping the machine, the “CE“ marking must be destroyed.

A.2 Personal protection equipment

Summary table of the Personal Protection Equipment (PPE) to be used during the various stages of the machine's service life.

Stage	Protective garments	Safety footwear	Gloves	Glasses	Safety helmet
Transport	—	●	○	—	○
Handling	—	●	○	—	—
Unpacking	—	●	○	—	—
Installation	—	●	●[1]	—	—
Normal use	●	●	●[2]	—	—
Adjustments	○	●	—	—	—
Routine cleaning	○	●	●[1–3]	○	—
Extraordi-nary cleaning	○	●	●[1–3]	○	—
Maintenance	○	●	○	—	—
Dismantling	○	●	○	○	—
Scrapping	○	●	○	○	—
Key:					
●	**PPE REQUIRED**				
○	**PPE AVAILABLE OR TO BE USED IF NECESSARY**				
—	**PPE NOT REQUIRED**				

1. During these operations, gloves must be cut-resistant. Failure to use the personal protection equipment by operators, specialized personnel or users can involve exposure to damage to health (depending on the model).
2. During these operations, gloves must be heatproof to protect hands from contact with hot food or hot parts of the appliance and/or when removing hot items from it. Failure to use the personal protection equipment by operators, specialised personnel or users can involve exposure to chemical risk and cause possible damage to health (depending on the model).
3. During these operations, gloves must be suitable for contact with chemical substances used (refer to the safety data sheet of the substances used for information regarding the required PPE). Failure to use the personal protection equipment by operators, specialized personnel or users can involve exposure to chemical risk and cause possible damage to health (depending on the model).

A.3 General safety

- The machines are provided with electric and/or mechanical safety devices for protecting workers and the machine itself.
- Never operate the machine, removing, modifying or tampering with the guards, protection or safety devices.
- Do not make any modifications to the parts supplied with the appliance.
- Several illustrations in the manual show the machine, or parts of it, without guards or with guards removed. This is purely for explanatory purposes. Do not use the machine without the guards or with the protection devices deactivated.
- Do not remove, tamper with or make illegible the safety, danger and instruction signs and labels on the machine.
- Place emergency telephone numbers in a visible position.

- The A-weighted emission sound pressure level does not exceed 70 dB(A).
- Turn the appliance off in case of fault or poor operation.
- Do not use products (even if diluted) containing chlorine (sodium hypochlorite, hydrochloric or muriatic acid, etc.) to clean the appliance or the floor under it.
- Do not use metal tools to clean steel parts (wire brushes or Scotch Brite type scouring pads).
- Do not allow oil or grease to come into contact with plastic parts. Do not allow dirt, fat, food or other residuals to form deposits on the appliance.
- Do not spray water or use water jets or steam cleaner.
- Do not store or use gasoline or other flammable vapours, liquids or items in the vicinity of this or any other appliance.
- Do not spray aerosols in the vicinity of this appliance while it is in operation.

A.4 Induction general safety

- The hotplate cannot be cooled with direct jets of water, intentional or accidental (e.g. when filling pots with water from a side pourer or spill onto the hot-plate).
- The glass-ceramic top (6mm thickness) could be damaged due to punctiform impacts (e. g. falling of metal object on the surface) or hard handling of the pots.
- If the surface is damaged or cracked, immediately disconnect the appliance or appropriate part of the appliance from the supply.
- During every normal cooking process the glass-ceramic top is very hot and therefore must not be touched (burns danger).
- During every normal cooking process must not be left empty pans onto the glass-ceramic top (overheating danger).
- During every normal cooking process do not place paper, cardboard, cloths, etc., between the pot and the glass-ceramic top (risk of fire).
- During every normal cooking process no other object (e.g. plastic vessels, closed tinned foods, aluminium foil, cutlery or other metal objects) except pots, must be placed on the hotplate (burns danger). The hotplate must not be used as a rest surface.
- If a splashguard device is used for cooking, it must not have a metal surface.
- During every normal cooking process, objects such as rings, watches, etc., worn by the user can become very hot if brought near the surface of the appliance (burns danger).
- **Anyone fitted with a pacemaker or other metal implants can suffer life-threatening injuries when using induction appliances**. Ask the manufacturer of your implant or consult your doctor about possible risks before using the cooker.
- Every kind of objects that react to magnetisation (e.g. credit cards, telephone cards, etc.) must not be placed near or above the glass-ceramic top.
- The induction appliance has internal air cooling. The air intake and outlet openings located under the appliance must not be blocked with objects or cloths (overheating danger).
- At the end of cooking always switch off the cooking zones by positioning the relatives control knobs in the off position.
- It is advisable to use pots specially designed for this induction appliance (refer to G.1.1 *Choice of pots*), otherwise the appliance may malfunction or become damaged.

A.5 General safety rules

Protection devices installed on the machine

- The guards on the machine are:

  fixed guards (e.g. casings, covers, side panels, etc.), fixed to the machine and/or frame with screws or quick-release connectors that can only be removed or opened with tools.

Therefore the user must not remove or tamper with such devices. The Manufacturer declines any liability for damage due to tampering or their non-use.

Instructions for use and maintenance

- Risks mainly of a mechanical, thermal and electrical nature exist in the machine. Where possible the risks have been neutralised:
  - directly, by means of adequate design solutions.
  - indirectly by using guards, protection and safety devices.
- During maintenance, always carried out by personnel qualified, several risks remain, as these could not be eliminated, and must be neutralised by adopting specific measures and precautions.
- Do not carry out any checking, cleaning, repair or maintenance operations on moving parts. Workers must be informed of this prohibition by means of clearly visible signs.
- To guarantee machine efficiency and correct operation, periodical maintenance must be carried out according to the instructions given in this manual.
- Make sure to periodically check correct operation of all the safety devices and the insulation of electrical cables, which must be replaced if damaged.
- Repair and extraordinary Maintenance have to be carried out by specialised authorised personnel provided with all the appropriate personal protection equipment, tools, utensils and ancillary means.
- Never operate the machine, removing, modifying or tampering with the guards, protection or safety devices.
- Before carrying out any operation on the machine, always consult the manual which gives the correct procedures and contains important information on safety.

Residual risks

- The machine has several risks that were not completely eliminated from a design standpoint or with the installation of adequate protection devices. Nevertheless, through this manual the Manufacturer has taken steps to inform operators of such risks, carefully indicating the personal protection equipment to be used by them. In order to reduce the risks, provide for sufficient spaces while installing the unit.

  To preserve these conditions, the areas around the machine must always be:
  - kept free of obstacles (e.g. ladders, tools, containers, boxes, etc.);
  - clean and dry;
  - well lit.

  For the Customer's complete information, the residual risks remaining on the machine are indicated below: such situations are deemed improper and therefore strictly forbidden.

Residual risk	**Description of hazardous situation**
Slipping or falling	The operator can slip due to water or dirt on the floor
Burns/abrasions (e.g. heating elements)	The operator deliberately or unintentionally touches some components inside the machine without using protective gloves
Electrocution	Contact with live parts during maintenance operations carried out with the electrical panel powered

Residual risk	Description of hazardous situation
Sudden closing of the lid/door/ oven door (if present, depending on the appliance type)	The operator for normal machine use could suddenly and deliberately close the lid/door/oven door (if present, depending on the appliance type)
Tipping of loads	When handling the machine or the packing containing it, using unsuitable lifting systems or accessories or with the unbalanced load

Mechanical safety characteristics, hazards

- The appliance does not have sharp edges or protruding parts. The guards for the moving and live parts are fixed to the cabinet with screws, to prevent accidental access.

CAUTION

In case of a significant anomaly (e.g. short circuits, wires coming out of the terminal block, motor breakdowns, worn electrical cable sheathing, smell of gas indicating possible leakage, etc.) the operator must:
immediately deactivate the machine and disconnect all the supplies (electricity, gas, water).

A.6 Safety signs to be placed near the machine area

Prohibition	Meaning
	Do not remove the safety devices
	Do not use water to extinguish fires (placed on electrical parts)
	Keep the area around the appliance clear and free from combustible materials. Do not keep flammable materials in the vicinity of the appliance
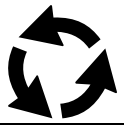	Install the appliance in a well-ventilated place to avoid the creation of dangerous mixtures of unburnt gases in the same room

Danger	Meaning
	caution, hot surface
	danger of electrocution (shown on electrical parts with indication of voltage)
	risk of electromagnetic fields
	Access forbidden to wearers of electrical stimulator (pacemakers)

End of use

- When the appliance is no longer to be used, make it unusable by removing the mains power supply wiring.

A.7 Transport, handling and storage

- Due to their size, the machines can be stacked on top of each other during transport, handling and storage by complying with that specified on the slip placed on the packing.
- Do not stand under suspended loads during loading/unloading operations. Unauthorised personnel must not enter the work area.
- The weight of the appliance alone is not sufficient to keep it steady.
- For machine lifting and anchoring, do not use movable or weak parts such as: casing, electrical raceways, pneumatic parts, etc.
- Do not push or pull the appliance to move it, as it may tip over.
- Machine transport, handling and storage personnel must be adequately instructed and trained regarding the use of lifting systems and personal protection equipment suitable for the type of operation carried out (e.g. overalls, safety shoes, gloves and helmet).
- When removing the anchoring systems, make sure the stability of the machine parts does not depend on the anchoring and, therefore, that this operation does not cause the load to fall off the vehicle. Before unloading the machine components, make sure all the anchoring systems are removed.
- Machine positioning, installation and disassembly must be carried out by specialised personnel.

A.8 Installation and assembly

- The operations described must be carried out by personnel qualified (refer to E.1 *Characteristics of personnel trained for normal machine use*) in compliance with the current safety regulations, regarding the equipment used and the operating procedures.
- The plug, if present, must be accessible after positioning the appliance in the place of installation.
- Disconnect the appliance from the power supply before carrying out any installation procedure.

A.9 Electrical connection

Before connecting, make sure the mains voltage and frequency match those indicated on the appliance data plate.

- Work on the electrical systems must only be carried out by specialised personnel.
- Connection to the power supply must be carried out in compliance with the regulations and provisions in force in the country of use; arrange a suitable high-sensitivity manual-reset differential omnipolar thermal-magnetic switch with contact gap enabling complete disconnection in category III overvoltage conditions.
- If the power cable is damaged, it must be replaced by the Customer Care Service or in any case by specialised personnel, in order to prevent any risk.
- Verify that a safety circuit breaker is installed between the power cable of the appliance and the mains electric line. The contact opening max. distance and leakage current must comply with the local safety regulations.
- Be sure to power the equipment with systems that are protected against overvoltage; the manufacturer declines all responsibility for effects due to anomalies induced by the electrical supply system.

A.10 Machine space limits

- A suitable space must be left around the appliance (for operations, maintenance, etc.).

- This space must be increased in case of use and/or transfer of other equipment and/or means or if exit routes are necessary inside the workplace.

A.11 Operating limits

Induction appliances: to guarantee continuous operation at maximum power, the room temperature must be below 40°C.

A.12 Positioning

- Install the appliance, taking all the safety precautions required for this type of operation, also respecting the relevant fire-prevention measures.
- Handle the appliance with care in order to avoid damage or danger to people. Use a pallet for handling and positioning.
- The installation diagram gives the appliance overall dimensions and the position of connections (gas, electricity, water). Check that they are available and ready for making all the necessary connections.
- Prevent the areas where the machine is installed to be polluted with corrosive substances (chlorine, etc.). In case such prevention cannot be guaranteed, the entire stainless steel surface has to be coated by a paraffin protective film spread by using a rag soaked with paraffin. The manufacturer declines any liability for corrosive effects due to external causes.
- The appliance can be installed separately or combined only with other appliances of the same range.
- The appliances are not suitable for recess-mounting. Leave a space of at least 250 mm between the appliance and side walls and 100 mm from the rear wall, or in any case an adequate space to enable subsequent servicing or maintenance operations.
- Suitably insulate surfaces that are at distances less than that indicated.
- Maintain a distance of at least 250 mm between the appliance and any combustible walls. Do not store or use flammable materials and liquids near the appliance.
- Check and, if necessary, level the appliance after positioning. Incorrect levelling can cause appliance malfunctioning.
- Wear protective gloves and unpack the machine, carrying out the following operations:
  - cut the straps and remove the protective film, taking care not to scratch the surface if scissors or blades are used;
  - remove the cardboard top, the polystyrene corners and the vertical protection pieces;
  - for appliances with stainless steel cabinet, remove the protective film very slowly without tearing it, to avoid leaving glue stuck to the surface;
  - should this happen, remove the traces of glue with a non-corrosive solvent, rinsing it off and drying thoroughly;
  - go over all stainless steel surfaces vigorously with a cloth moistened with paraffin oil in order to create a protective film.
- In case of electrical permanent connection: the device must be lockable in the open position and accessible even after the appliance is installed in its place.

⚠ **WARNING**
Keep the ventilation openings in the appliance casing free of any obstructions.

A.13 Reasonably foreseeable improper use

Improper use is any use different from that specified in this manual. During machine operation, other types of work or activities deemed improper and that in general can involve

risks for the safety of operators and damage to the appliance are not allowed. Reasonably foreseeable improper use includes:

- lack of machine maintenance, cleaning and periodical checks;
- structural changes or modifications to the operating logic;
- tampering with the guards or safety devices;
- failure to use personal protection equipment by operators, specialised personnel and maintenance personnel;
- failure to use suitable accessories (e.g. use of unsuitable equipment or ladders);
- keeping combustible or flammable materials, or in any case materials not compatible with or pertinent to the work, near the machine;
- wrong machine installation;
- placing in the machine any objects or things not compatible with its use, or that can damage the machine, cause injury or pollute the environment;
- climbing on the machine;
- non-compliance with the requirements for correct machine use;
- other actions that give rise to risks not eliminable by the Manufacturer.

The previously described actions are prohibited!

A.14 Machine cleaning and maintenance

- Before carrying out any cleaning or maintenance, disconnect the appliance from the power supply and carefully unplug it and empty all the water / oil tanks or grease collecting container (if presents).
- During maintenance, the cable and plug must be kept in a visible position by the operator carrying out the work.
- Do not touch the appliance with wet hands or feet or when barefoot.
- Do not remove the safety guards.
- Use a ladder with suitable protection for work on appliances with high accessibility (depending on the appliance type).
- Use suitable personal protection equipment (protective gloves). Refer to “A.2 *Personal protection equipment*“ for suitable personal protection equipment.

Ordinary maintenance

- Disconnect the power supply before cleaning the appliance.
- Do not clean the machine with jets of water.

Precaution in case of long periods

- Machine maintenance, checking and overhaul operations must only be carried out by specialised personnel or the Customer Care Service, provided with adequate personal protection equipment (safety shoes and gloves), tools and ancillary means.
- Work on the electrical equipment must only be carried out by a specialised electrician or the Customer Care Service
- Put the machine in safe conditions before starting any maintenance operation.
- Respect the requirements for the various routine and extraordinary maintenance operations. Non-compliance with the instructions can create risks for personnel.

Preventive maintenance

- In order to ensure the safety and performance of your equipment, it is recommended that service is undertaken by Electrolux authorised engineers every 12 months, in accordance with Electrolux Service Manuals. Please contact your local Electrolux Service Centre for further details.

Repair and extraordinary maintenance

- Repair and extraordinary Maintenance have to be carried out by specialised authorised personnel. The manufacturer declines any liability for any failure or damage caused by the intervention of an unauthorised technician by the Manufacturer and the original manufacturer warranty will be invalidated.

Parts and accessories

- Use only original accessories and/or spare parts. Failure to use original accessories and/or spare parts will invalidate the original manufacturer warranty and may render the machine not compliant with the safety standard.

A.15 Machine disposal

- Dismantling operations must be carried out by specialised personnel.
- Work on the electrical equipment must only be carried out by specialised personnel, with the power supply disconnected.
- Make the appliance unusable by removing the power cable and any compartment closing devices, to prevent the possibility of someone becoming trapped inside.

B WARRANTY

B.1 Warranty terms and exclusions

If the purchase of this product includes warranty coverage, warranty is provided in line with local regulations and subject to the product being installed and used for the purposes as designed, and as described within the appropriate equipment documentation.

Warranty will be applicable where the customer has used only genuine spare parts and has performed maintenance in accordance with Electrolux Professional user and maintenance documentation made available in paper or electronic format.

Electrolux Professional strongly recommends using Electrolux Professional approved cleaning, rinse and descaling agents to obtain optimal results and maintain product efficiency over time.

The Electrolux Professional warranty does not cover:

- service trips cost to deliver and pick up the product;
- installation;
- training on how to use/operate;
- replacement (and/or supply) of wear and tear parts unless resulting from defects in materials or workmanship reported within one (1) week from the failure;
- correction of external wiring;
- correction of unauthorized repairs as well as any damages, failures and inefficiencies caused by and/or resulting from;
  - insufficient and/or abnormal capacity of the electrical systems (current/voltage/frequency, including spikes and/or outages);
  - inadequate or interrupted water supply, steam, air, gas (including impurities and/or other that does not comply with the technical requirements for each machine);
  - plumbing parts, components or consumable cleaning products that are not approved by the manufacturer;
  - customer's negligence, misuse, abuse and/or non-compliance with the use and care instructions detailed within the appropriate equipment documentation;
  - improper or poor: installation, repair, maintenance (including tampering, modifications and repairs carried out by third parties not authorized) and modification of safety systems;
  - Use of non-original components (e. g.: consumables, wear and tear, or spare parts);
  - environment conditions provoking thermal (e. g. overheating/freezing) or chemical (e. g. corrosion/oxidation) stress;
  - foreign objects placed in- or connected to- the product;
  - accidents or force majeure;
  - transportation and handling, including scratches, dents, chips, and/or other damage to the finish of the product, unless such damage results from defects in materials or workmanship and is reported within one (1) week of delivery unless otherwise agreed;
- product with original serial numbers that have been removed, altered or cannot be readily determined;
- replacement of light bulbs, filters or any consumable parts;
- any accessories and software not approved or specified by Electrolux Professional.

Warranty does not include scheduled maintenance activities (including the parts required for it) or the supply of cleaning agents unless specifically covered within any local agreement, subject to local terms and conditions.

Check on Electrolux Professional website the list of authorized customer care.

C TECHNICAL DATA

C.1 Dataplate position

IMPORTANT
This instruction manual contains information relevant to various appliances. See the dataplate located under the control panel to identify the appliance (see fig. below).

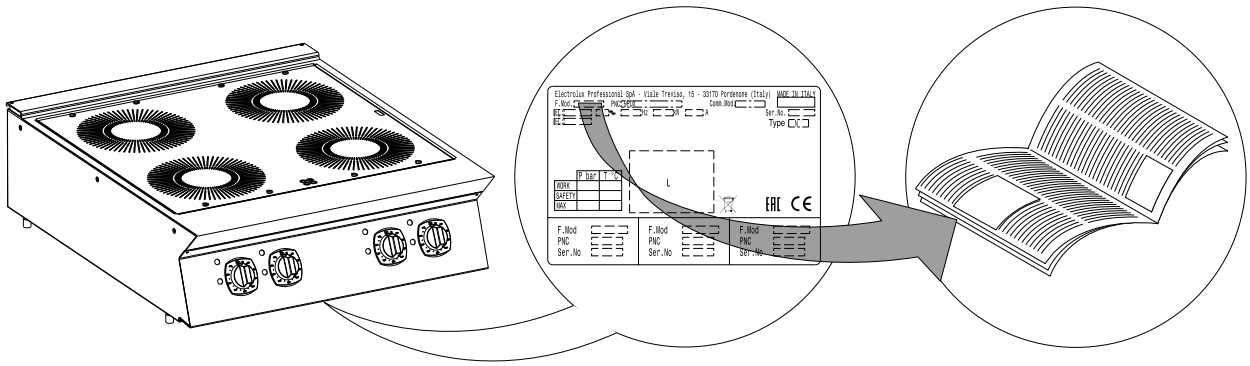

IMPORTANT
When installing the appliance, make sure the electrical connection is carried out in compliance with that specified on the data plate.

C.2 Appliance and manufacturer's identification data

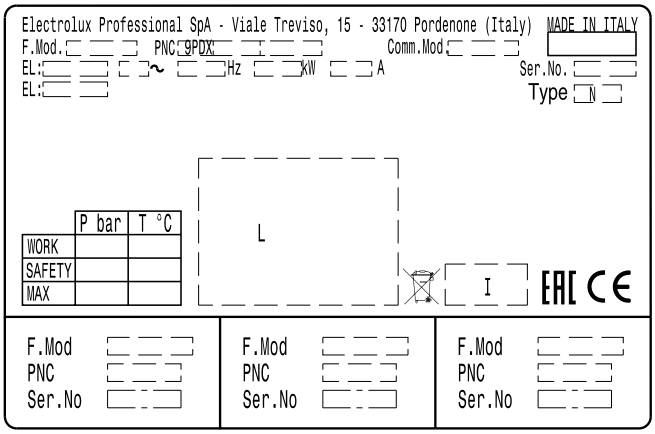

The dataplate gives the product identification and technical data. The meaning of the various information given on it is listed below:

F.Mod.	factory description of product
Comm.Model	commercial description
PNC	production number code
Ser.No.	serial number
Type	family type
El	power supply voltage + phase
Hz	power supply frequency
kW	max. power input
A	current absorbed
Power unit El.	power
I	dust and water protection rating
CE	CE marking
N	certification group
L	dust and water protection rating
Electrolux Professional SpA Viale Treviso 15 33170 Pordenone Italy	manufacturer

C.3 Induction appliance

Models		N7E					
		N7CIN	IH720	IH740	IH72P		IH74P
		+7INEDW00P	+7INED2000	+7INEH4000	+7INEH2F0P	+7INED200P	+7INEH400P
		400mm	400mm	800mm	800mm	400mm	800mm
Power supply voltage	V	380–415	380–415	380–415	380–415	380–415	380–415
Frequency	Hz.	50/60	50/60	50/60	50/60	50/60	50/60
Phases	Nr.	3	3	3	3	3	3
Hotplates	Nr.	1	2	4	2	2	4
Max total power	kW	5	7	14	10	10	20
Power supply cable section	mm2	2,5	2,5	4	2,5	2,5	6

Models		N9E		
		N9CIN	IH920	IH940
		+9INEDW00P +9HHCDAOMCE	+9INED2008 +9HHADAOMCE	+9INEH4008 +9HHBDAOMEE
		400mm	400mm	800mm
Power supply voltage	V	380–415	380–415	380–415
Frequency	Hz.	50/60	50/60	50/60
Phases	Nr.	3	3	3
Hotplates	Nr.	1	2	4
Max total power	kW	5	10	20
Power supply cable section	mm2	2,5	2,5	6

D GENERAL INFORMATION

WARNING
Refer to "*WARNING and Safety Information*"

D.1 Introduction

Given below is some information regarding the intended use of this appliance, its testing, and a description of the symbols used (that identifies the type of warning), the definitions of terms used in the manual and useful information for the appliance user.

D.2 Intended use and restrictions

This appliance is designed for cooking food. It is intended for commercial use.

This appliance must not be used by minors and/or adults with limited physical, sensory or mental abilities or without adequate experience and knowledge regarding its use.

Children shall not play with the appliance. Cleaning and user maintenance shall not be made by children without supervision.

CAUTION
The machine is not suitable for installation outdoors and/or in places exposed to atmospheric agents (rain, direct sunlight, etc.).

D.3 Testing and inspection

Our appliances have been designed and optimized, with laboratory testing, in order to obtain high performance and efficiency.

Passing of the tests (visual inspection - gas/electrical test - functional test) is guaranteed and certified by the specific enclosures.

D.4 Copyright

This manual is intended solely for consultation by the operator and can only be given to third parties with the permission of Electrolux Professional SpA.

D.5 Keeping the manual

The manual must be carefully kept for the entire life of the machine, until scrapping. The manual must stay with the machine in case of transfer, sale, hire, granting of use or leasing.

D.6 Recipients of the manual

This manual is intended for:

- the carrier and handling personnel;
- installation and commissioning personnel;
- the employer of machine users and the workplace manager;
- operators for normal machine use;
- specialised personnel - Customer Care service (see service manual).

D.7 Definitions

Listed below are the definitions of the main terms used in the manual. It is advisable to read them carefully before use.

Operator	machine installation, adjustment, use, maintenance, cleaning, repair and transport personnel.
Manufacturer	Electrolux Professional SpA or any other service centre authorised by Electrolux Professional SpA.
Operator for normal machine use	an operator who has been informed and trained regarding the tasks and hazards involved in normal machine use.
Customer Care service or specialised personnel	an operator instructed/trained by the Manufacturer and who, based on his professional and specific training, experience and knowledge of the accident-prevention regulations, is able to appraise the operations to be carried out on the machine and recognise and prevent any risks. His professionalism covers the mechanical, electrotechnical and electronics fields etc.
Danger	source of possible injury or harm to health.
Hazardous situation	any situation where an operator is exposed to one or more hazards.
Risk	a combination of probabilities and risks of injury or harm to health in a hazardous situation.
Protection devices	safety measures consisting of the use of specific technical means (guards and safety devices) for protecting operators against risks.
Guard	an element of a machine used in a specific way to provide protection by means of a physical barrier.
Safety device	a device (other than a guard) that eliminates or reduces the risk; it can be used alone or in combination with a guard.
Customer	the person who purchased the machine and/or who manages and uses it (e. g. company, entrepreneur, firm).
Electrocution	an accidental discharge of electric current on a human body.

D.8 Responsibility

The Manufacturer declines any liability for damage and malfunctioning caused by:

- non-compliance with the instructions contained in this manual;
- repairs not carried out in a workmanlike fashion, and replacements with parts different from those specified in the spare parts catalogue (the fitting and use of non-original spare parts and accessories can negatively affect machine operation and invalidates the original manufacturer warranty);
- operations carried out by non-specialised personnel;
- unauthorized modifications or operations;
- missing, lack or inadequate maintenance;
- improper machine use;
- unforeseeable extraordinary events;
- use of the machine by uninformed and / or untrained personnel;
- non-application of the current provisions in the country of use, concerning safety, hygiene and health in the workplace.

The Manufacturer declines any liability for damage caused by arbitrary modifications and conversions carried out by the user or the Customer.

The employer, workplace manager or service technician are responsible for identifying and choosing adequate and suitable personal protection equipment to be worn by operators, in compliance with regulations in force in the country of use.

The Manufacturer declines any liability for inaccuracies contained in the manual, if due to printing or translation errors.

Any supplements to the installation, use and maintenance manual the Customer receives from the Manufacturer will form an integral part of the manual and therefore must be kept together with it.

E NORMAL USE

WARNING
Refer to "*WARNING and Safety Information*"

E.1 Characteristics of personnel trained for normal machine use

The Customer must make sure the personnel for normal machine use are adequately trained and skilled in their duties, as well as ensuring their own safety and that of other persons.

The Customer must make sure his personnel have understood the instructions received and in particular those regarding work hygiene and safety in use of the machine.

E.2 Characteristics of personnel enabled to operate on the machine

The Customer is responsible for ensuring that persons assigned to the various duties:

- read and understand the manual;
- receive adequate training and instruction for their duties in order to perform them safely;
- receive specific training for correct machine use.

E.3 Operator qualified for normal machine use

Must have at least:

- knowledge of the technology and specific experience in operating the machine;
- adequate general basic education and technical knowledge for reading and understanding the contents of the manual, including correct interpretation of the drawings, signs and pictograms;
- sufficient technical knowledge for safely performing his duties as specified in the manual;
- knowledge of the regulations on work hygiene and safety.

In case of a significant anomaly (e. g. short circuits, wires coming out of the terminal block, motor breakdowns, worn electrical cable sheathing, etc.) the operator for normal machine use must:

- immediately deactivate the machine and disconnect all the supplies (electricity, gas, water).

F INSTALLATION AND ASSEMBLY

WARNING
Refer to "*WARNING and Safety Information*"

F.1 Introduction

To ensure correct operation of the appliance and maintain safe conditions during use, carefully follow the instructions given below in this section.

CAUTION
Before moving the appliance make sure the load bearing capacity of the lifting equipment used is suitable for its weight.

WARNING
The appliance is marked with the induction generator frequency or frequency range in kHz.

WARNING
The appliance generates magnetic fields; frequency range: 10-100 kHz.

F.2 Customer's responsibilities

The tasks and works required of the Customer are:

- prearrange a high-sensitivity manual-reset magneto-thermal circuit-breaker;
- prearrange a device lockable in the open position for the connection to the power supply.
- check the floor planarity on which the machine is placed.
- install a rapid gas shutoff valve ahead of each individual appliance (depending on the model). Install the valve in an easily accessed place.
- for information regarding the electrical connection, refer to F.7.1 *Electrical appliances* paragraph;

F.3 Disposal of packing

The packing must be disposed of in compliance with the current regulations in the country where the appliance is used. All the packing materials are environmentally friendly.

They can be safely kept, recycled or burned in an appropriate waste incineration plant. Recyclable plastic parts are marked as follows:

PE	**Polyethylene** • Outer wrapping • Instructions bag
PP	**Polypropylene** • Straps
PS	**Polystyrene foam** • Corner protectors

The parts in wood and cardboard can be disposed of, respecting the current regulations in the country where the machine is used.

F.4 Joining Appliances

1. Undo the 4 fixing screws;
2. Remove the control panels of the appliances (Fig.1A);
3. Remove the fixing screw nearest the control panel, from each side to be joined (Fig.1B);
4. Bring the appliances together;
5. Turn the feet to level them until the tops match (Fig.1D);
6. Turn one of the two plates inside the appliances 180°C (Fig.1C);

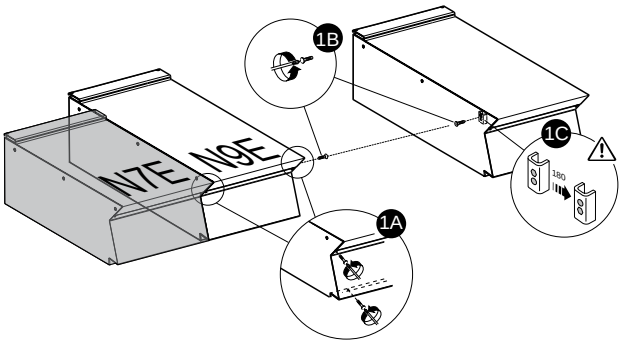

7. From inside the control panel of the same appliance, join them at the front side, screwing one M5x40 Hex Head screw (supplied) on the opposite insert (Fig.1E);
8. From the rear of the appliances, insert the coupling plate (provided) in the side slots on the back panels;
9. Secure the plate with two flat head M5 screws provided (Fig.1F).

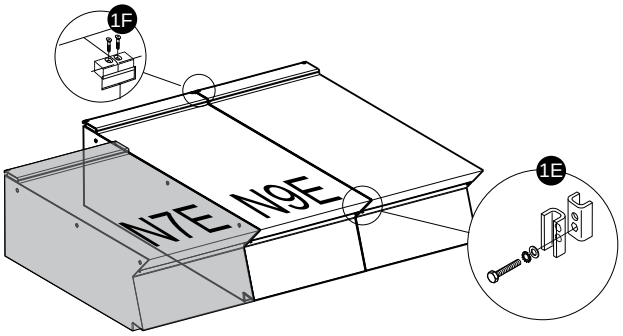

F.4.1 Floor fixing

To avoid accidental tipping of built-in half-module appliances installed separately, fix them to the floor carefully following the instructions enclosed with the corresponding accessory (F206136).

F.4.2 Sealing Gaps Between Appliances

Follow the instructions supplied with the optional sealing paste pack.

F.5 Installation limits

- In case of installation on a counter position a baffle (“A“) to separate the cooling air inflow (IN) and outflow (OUT).

  The baffle must close the space between the bottom and the counter.

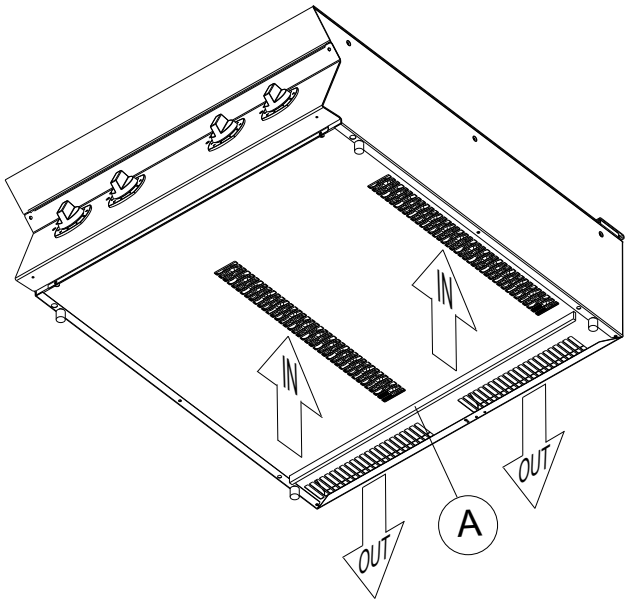

IMPORTANT
The machine is not suitable for installation outdoors and/or in places exposed to atmospheric agents (rain, direct sunlight, etc.) at altitudes exceeding 2000 m above sea level.

F.6 Gas, electricity, water and other connections (if present, depending on the appliance and/or model)

- Any installation work or maintenance to the supply system (gas, electricity, water and/or steam, if present) must only be carried out by the utility company or an authorised installation technician.
- Refer to the appliance dataplate for the product code.
- See the installation diagram for the type and position of appliance connections.

F.7 Electrical connection

F.7.1 Electrical appliances

WARNING
Work on the electrical systems must only be carried out by specialised personnel.

Before connecting, make sure that:

- the mains voltage and frequency match those indicated on the appliance data plate;
- there is an efficient earth contact;
- the power supply is arranged and able to take the actual current absorption and that it is correctly executed according to the regulations and provisions in force in the country of use.
- a differential thermal-magnetic switch suitable for the input specified on the dataplate, with contact gap enabling complete disconnection in category III overvoltage conditions and complying with the regulations in force, is installed between the power cable and the electric line.

  For the correct size of the switch, refer to the absorbed current specified on the appliance dataplate.

F.7.2 To access the terminal board

- Remove the appliance control panel “C“ by undoing the fixing screws.
- Connect the power cable to the terminal block “M“ according to the wiring diagram provided with the appliance.
- Secure the power cable with the cable clamp.

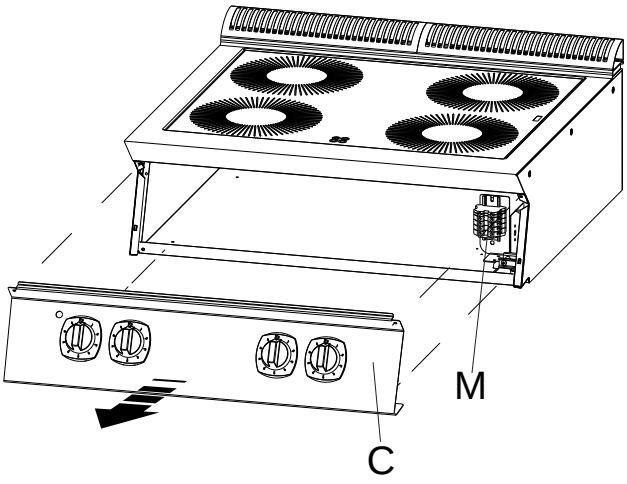

- After making the connection, with the appliance working check that the power supply does not fluctuate by ±10% the rated voltage.
- Installation requires the inclusion of a device lockable in the "open" position during maintenance.

F.7.3 Power cable

Unless otherwise specified, our appliances are not equipped with a power cable.

The installer must use a flexible cable having characteristics not lower than the H07RN-F rubber insulated type.

Protect the section of cable outside the appliance with a metal or rigid plastic tube.

WARNING
If the power cable is damaged, it must be replaced by the after-sales service or in any case by qualified personnel, in order prevent any risk

WARNING
The manufacturer declines any liability for damage or injury resulting from breach of the above rules or non-compliance with the electric safety regulation in force in the country where the machine is used

F.7.4 Circuit breaker

Verify that a safety circuit breaker is installed between the power cable of the appliance and the mains electric line.

The contact opening max. distance and leakage current must comply with the local safety regulations.

F.7.5 Equipotential node and Earth connection

Connect the appliance to an earth; it must be included in an equipotential node by means of the screw located at the front right under the frame.

The screw is marked with the symbol ⏚.

G INSTRUCTION FOR THE USER

IMPORTANT
In case of accidental breaking of the glass-ceramic surface, immediately unplug the equipment

G.1 Induction models

The 1/2 module Wok cooktop has one 5 kW (N7E/N9E) heating zone.

The 1/2 module cooktops have two 3.5 kW (N7E)/5 kW. (N9E) heating zones. The 1 module cooktops have four 3.5 kW (N7E)/ 5 kW (N9E) heating zones.

All the heating zones are independent and can be adjusted separately.

NOTE!
The induction cooking plate (in glass-ceramic) is ready to use; a pre-heat phase is not necessary.

G.1.1 Choice of pots

The induction cooking system works with cookware whose bottom material reacts to the variable magnetic field produced by the components of the equipment.

The use of cookware with different characteristics therefore produces different effects.

It is therefore possible that the performances obtained will change according to the type of cookware used.

The manufacturer offers optional accessories (not included) that guarantee the highest performance.

The induction cooking system is equipped with a pot recognition system.

If the pot is removed from a turned on cooking area, that area switches off automatically.

When the pot is put back on the zone, the zone comes on again.

- It is advisable to use pots specially designed for induction, and in particular multilayer-type pots.
- Use pots with bottom in iron, iron plate, enamelled iron, cast iron, special multilayer metals.
- Do not use pots in layered metal with aluminium body and open edge.
- This heating system does not work with unsuitable materials; these are: nickel-chromium s/steel, aluminium, copper, brass, glass, porcelain.
- Pots of diameter less than approx. **12 cm [4,72″]** are not recognized by the system; heating remains off.
- It is also advisable to use pots with maximum diameter **28 cm [11,02″]** in order to obtain maximum heating efficiency.
- Do not use empty pots or pans on the appliance as they can quickly reach very high temperatures.

CAUTION
To avoid compromising inductor functionality, never use pots with bottoms that are not perfectly flat: the temperature may not be measured correctly, damaging the appliance.

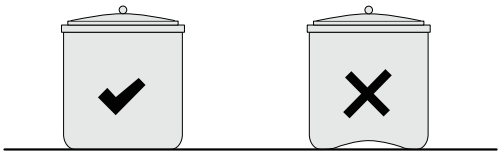

To avoid compromising inductor functionality of the Wok cooktop, never **use pots with bottoms flat**: the temperature may not be measured correctly, damaging the appliance.

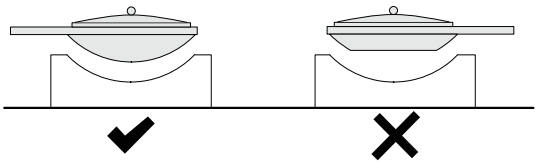

NOTE!
Use wok pots suggested by Electrolux Professional in order to obtain max performances of your appliance.
For further details please contact Electrolux Professional.

G.1.2 Switching on

Each heating zone is controlled by a knob “M“:

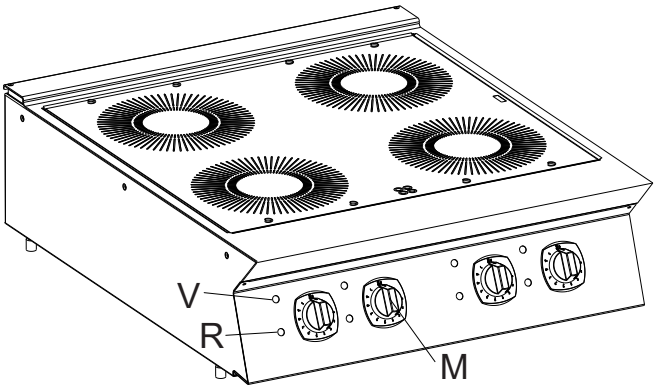

- Turn on the switch installed ahead of the appliance.
- Turn knob “M“ to switch on the relevant heating zone to the desired power;:

  The knob has the following positions:

  – **“0“:** zone off;
  – **“1“...“4“:** minimum power;
  – **“5“...“8“:** medium power;
  – **“9:“** maximum power.

  When the switch is turned on and a suitable pot is positioned on the appliance, the green On indicator “V“ lights up.

  If there are no pots or an unsuitable pot on the appliance, the light flashes at 2-second intervals.

  Lighting up of red lamp “R“ signals a serious problem in the inductor. In this case, call the authorized technical assistant.

G.1.3 Cooking advice

- Never allow two or more pots to touch on the top when switched on.

- Induction has a very low inertia in transferring electric energy from the source to the food: if the energy value is changed the reaction on the food occurs immediately.
- Heating is very rapid: at max. power, bottoms of empty pots and pans reach approximately 200°C [392°F].
- Shifting the pot on the glass-ceramic plate causes uneven conduction of heat on the bottom and therefore food sticking to a part of it: the pot must always remain in the middle of the cooking zone.
- When heating oil or fat, watch the pot constantly because these substances can quickly overheat and burn.
- Optimum even heating is achieved with pots properly centred on the circular serigraphy.
- Never place more than one pot on the same circular area.

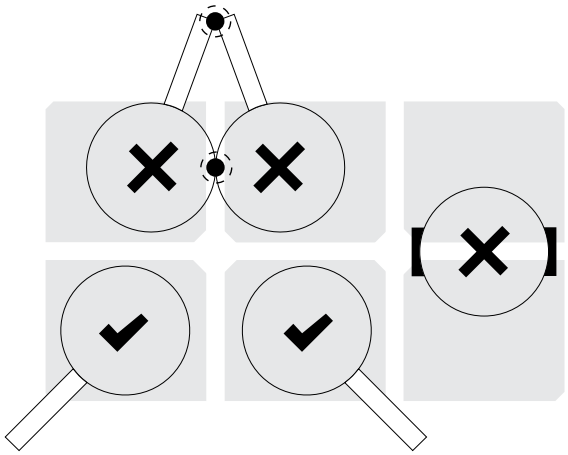

G.1.4 Switching off

- Turn the control knobs “M“ to “0“.

H MACHINE CLEANING AND MAINTENANCE

WARNING
Refer to “*WARNING and Safety Information*“

H.1 Ordinary maintenance

H.1.1 Care information

The following care operations have to be carried out by the owner and/or user of the appliance.

IMPORTANT
Problems resulting from poor or lack of care as hereinafter described will not be covered by the warranty.

WARNING
Before carrying out any cleaning or maintenance, disconnect the appliance from the power supply.

H.1.2 Cleaning the appliance and accessories

Before using the appliance, clean all the internal parts and accessories with lukewarm water and neutral soap or products that are over 90% biodegradable (in order to reduce the emission of pollutants into the environment), then rinse and dry thoroughly.

CAUTION
Do not use solvent-based detergents (e.g. trichloro-ethylene) or abrasive powders for cleaning.

H.1.3 External parts

SATIN-FINISH STEEL SURFACES (daily)

- Clean all steel surfaces: dirt is easily removed when it has just formed.
- Remove grime, fat and other cooking residuals from steel surfaces when cool using soapy water, with or without detergent, and a cloth or sponge.
  Dry the surfaces thoroughly after cleaning.
- In case of encrusted grime, fat or food residuals, go over with a cloth or sponge, wipe in the direction of the satin finish and rinse often:
  Rubbing in a circular motion combined with the particles of dirt on the cloth/sponge could spoil the steel’s satin finish.
- Metal objects can spoil or damage the steel: damaged surfaces become dirty more easily and are more subject to corrosion.
- Restore the satin finish if necessary.

SURFACES BLACKENED BY HEAT (when necessary)

- Exposure to high temperatures can cause the formation of dark marks.
  These do not constitute damage and can be removed by following the instructions given in the previous section.

H.1.4 Ceramic — glass surfaces

- Clean the glass-ceramic top using a paper serviette soaked in a specific detergent for glass; rinse the top, then dry with a clean and dry cloth.
- Do not clean the top when hot.

H.1.5 Induction surfaces

- It is forbidden to use aluminium foil in proximity of the induction zones: relevant damages shall not be covered by the manufacturer warranty.
- If noticing aluminium foils (even in small pieces), immediately remove to prevent damaging the induction device.

CAUTION
Make sure no water comes into contact with electrical components: water penetration can cause short circuiting and dissipation, tripping the appliance's protection devices.

H.1.6 Induction air filters

- To avoid breakage and damaging the appliance, check and clean the filter at least once a month; this operation must be carried out by an authorized technician.
- For cleaning:
  - remove the filter from its seat;
  - bang it hard to clean off the dust;
  - If the filter is dirty with grease, wash it with degreasing soap, then rinse and dry;
  - at the end of the operation, refit the filter in its seat.

  Every three months it is advisable to replace the filter if it has deteriorated.

H.1.7 Periods of non-use

If the appliance is not going to be used for some time, take the following precautions:

- Close the valves or main switches ahead of the appliances
- Go over all stainless steel surfaces vigorously with a cloth moistened with paraffin oil in order to create a protective film.
- Periodically air the premises.
- Have the appliance checked before using it again.
- To prevent too rapid evaporation of accumulated moisture with consequent breakage of elements, switch electric appliances on at minimum heat for at least 45 minutes before reuse.

CAUTION
Put the machine in safe conditions before starting any maintenance operation.

After carrying out maintenance, make sure the machine is able to work safely and, in particular, that the protection and safety devices are efficient.

CAUTION
Respect the requirements for the various routine and extraordinary maintenance operations; non-compliance with the instructions can create risks for personnel.

H.1.8 Internal parts (every 6 months)

IMPORTANT
Operations to be carried out only by specialised personnel.

- Check the condition of the internal parts.
- Remove any deposits of dirt inside the appliance.
- Check and clean the discharge system.

IMPORTANT
In particular conditions (e. g. intensive use of the appliance, salty environment, etc.) the above cleaning should be more frequent.

H.2 Warnings

Red light on and green light flashing between two longer lighting phases requires an initial action by the user and, if necessary, a more thorough check by Customer Care Service, (see the table given below).

Each cooking zone has an internal temperature control device that activates before any overheating, reducing the cooking zone power.

- If overheating persists, the cooking zone is temporarily turned off.
- Cooling is quicker if the pot is taken off the glass-ceramic plate.
- It is advisable to turn the zone off with the control knob and wait a while.

When cooled, the cooking zone can be switched on again by turning the control knob from "0" to the desired setting.

H.3 Warnings codes

Nr. lamp green led	Warning	Cause	Corrective Action (User)	Corrective Action (After-Sales Service)
1	Cooking zone overtemperature	The zone temperature is too high	Switch of the power zone and restart after zone cooling down	—
		Material of pot unsuitable	Use a pot made from appropriate material	—
2	None	—	—	—
3	Main board IGBT temperature sensor	Dirty air filters	Disconnect the appliance from the mains and call the after-sales service	Clean the air filters
		Cooling duct obstructed		Make sure the cooling air inlet and outlet are not blocked
		Ingestion of hot air from the cooling inlets		Check the cooling air path
		Cooling fan blocked or faulty		Clean the cooling fan if problem persist replace the induction generator
		Temperature sensor of power terminals faulty		Replace the induction generator
4	Potentiometer error	Disconnection between the generator and controls	Disconnect the appliance from the mains and call the after-sales service	Check the internal connections
		Potentiometer faulty		Replace potentiometer
5	Main board failure on +15V power supply output	Induction generator failure	Disconnect the appliance from the mains and call the after-sales service	Replace the induction generator

6	Cooling system failure	Cooling fan blocked	Disconnect the appliance from the mains and call the after-sales service	Clean or replace the cooling fan
7	Cooking zone temperature sensor	Inductor temperature sensor disconnected or interrupted	Disconnect the appliance from the mains and call the after-sales service	Check the inductor temperature sensor if it works replace induction generator
8	None	—	—	—
9	None	—	—	—
10	Main board power circuit failure	Phase relay faulty	Disconnect the appliance from the mains and call the after-sales service	Replace the induction generator
11	Zone temperature sensor out of range	Sensor is shorted or the conditioning circuit is not working properly	Disconnect the appliance from the mains and call the after-sales service	Check the inductor temperature sensor if it works replace induction generator
12	None	—	—	—
13	Main board mains voltage	Generator mains voltage to low	Disconnect the appliance from the mains and call the after-sales service	Check the main power supply
14	None	—	—	—
15	Main board microcontroller error	Induction generator failure	Disconnect the appliance from the mains and call the after-sales service	Replace the induction generator

H.4 Inefficiencies detected during cooking

INEFFICIENCY	CAUSE	CORRECTIVE ACTION
Insufficient heating of cooking zone	Material of pot unsuitable	Use a pot made from appropriate material
	A mains phase is lacking	Check the mains connections
Continuous heating of cooking zone at max. power	Control interface faulty	Check or replace the control interface
A free cooking zone starts working	Pot detection sensor faulty	Repair or replace the generator
Small metal objects are heated	Pot detection sensor faulty	Repair or replace the generator
No heating of cooking zone	Pot bottom less than 12 cm wide	Use a pot of suitable size
	A phase is lacking	Check the mains connections
The appliance does not respond	Main fuse blown	Check the mains connections
	Supply line faulty	
The fuses blow when switching the appliance on	Short circuit in generator	Repair or replace the generator
Failed heating of a single cooking zone	Generator faulty	Repair or replace the generator

H.5 Repair and extraordinary maintenance

NOTE!
Repair and extraordinary maintenance have to be carried out by specialised authorised personnel, who can ask the manufacturer to supply a service manual.

H.6 Maintenance intervals

All the components requiring maintenance are accessible from the front or the rear panel of the appliance.

The inspection and maintenance intervals depend on the actual machine operation conditions and ambient conditions (presence of dust, damp, etc.), therefore precise time intervals cannot be given.

In any case, careful and periodical machine maintenance is advisable in order to minimise service interruptions.

To ensure constant machine efficiency, it is advisable to carry out the checks with the frequency given in the following table:

IMPORTANT
Machine maintenance, checking and overhaul operations must only be carried out by a specialised Technician or the Customer Care Service, provided with adequate personal protection equipment (safety shoes and gloves), tools and ancillary means;
Work on the electrical equipment must only be carried out by a specialised electrician or the Customer Care Service.

Maintenance, inspections, checks and cleaning	Frequency	Responsibility
Ordinary cleaning • general cleaning of machine and surrounding area.	Daily	Operator
Mechanical protection devices • check their condition and for any deformation, loosening or removed parts.	Yearly	Service
Control • check the mechanical part, for cracks or deformation, tightening of screws: check the readability and condition of words, stickers and symbols and restore if necessary.	Yearly	Service
Machine structure • tightening of main bolts (screws, fixing systems, etc.) of machine.	Yearly	Service
Safety signs • check the readability and condition of safety signs.	Yearly	Service
Electrical control panel • check the electrical components installed inside the electrical control panel. Check the wiring between the electrical panel and machine parts.	Yearly	Service
Electrical connection cable and plug • check the connection cable (replace if necessary) and plug.	Yearly	Service
Preventive maintenance • remove any deposits of dirt inside the appliance.	Every 6 months[1]	Service
Control • check the conditions of the internal parts.	Every 6 months[1]	Service
Control • check and clean the discharge system.	Every 6 months[1]	Service
General machine overhaul • check all components, electrical equipment, corrosion, pipes…	Every 10 years[2]	Service

1. In particular conditions (e. g. intensive use of the appliance, salty environment, etc.) the preventive maintenance should be more frequent.
2. the machine is designed and built for a duration of about 10 years. After this period of time (from commissioning) the machine must undergo a general inspection and overhaul. Some examples of checks to be carried out are given below.

- Check for any oxidised electrical components or parts; if necessary, replace them and restore the initial conditions;
- Check the structure and welded joints in particular;
- Check and replace bolts and/or screws, also checking for any loose components;
- Check the electrical and electronic system;
- Check the functionality of safety devices;
- Check the general condition of protection devices and guards.

NOTE!
It is advisable to stipulate a preventive and scheduled maintenance contract with the Customer Care Service.

Decommissioning

- All scrapping operations must occur with the machine stopped and cold and the electrical power supply disconnected;
- Work on the electrical equipment must only be carried out by a qualified electrician, with the power supply disconnected;
- To carry out these operations it is necessary to use: overalls, safety shoes and gloves;
- During decommissioning and handling of the various parts, the minimum height from the floor must be maintained.

I MACHINE DISPOSAL

WARNING
Refer to "*WARNING and Safety Information*"

I.1 Waste storage

At the end of the product's life-cycle, make sure it is not dispersed in the environment.

Depending on the model, the doors must be removed before scrapping the appliance.

SPECIAL waste materials can be stored temporarily while awaiting treatment for disposal and/or permanent storage. In any case, the current environmental protection laws in the user's country must be observed.

I.2 Procedure regarding appliance dismantling macro operations

Before disposing of the machine, make sure to carefully check its physical condition, and in particular any parts of the structure that can give or break during scrapping.

The machine's parts must be disposed of in a differentiated way, according to their different characteristics (e. g. metals, oils, greases, plastic, rubber, etc.).

Different regulations are in force in the various countries, therefore comply with the provisions of the laws and competent bodies in the country where scrapping takes place.

In general, the appliance must be taken to a specialised collection/ scrapping centre.

Dismantle the appliance, grouping the components according to their chemical characteristics, remembering that the compressor contains lubricant oil and refrigerant fluid which can be recycled, and that the refrigerator components are special waste assimilable with urban waste.

The symbol on the product indicates that this product should not be treated as domestic waste, but must be correctly disposed of in order to prevent any negative consequences for the environment and human health. For further information on the recycling of this product, contact the local dealer or agent, the Customer Care service or the local body responsible for waste disposal.

NOTE!
When scrapping the machine, any marking, this manual and other documents concerning the appliance must be destroyed.

J ENCLOSED DOCUMENTS

- Set of test and inspection documents.
- Wiring diagram.
- Installation diagram.
- Declaration of Conformity

CE

Electrolux Professional SPA
Viale Treviso 15
33170 Pordenone
www.professional.electrolux.com

Commercial Kitchen Equipment Parts

Find more Electrolux Professional equipment resources at

parthubz.com/equipment/electrolux-professional

Need parts or service?

Call 833-700-8006

support@parthubz.com

parthubz.com