Commercial Kitchen Equipment Parts

ELECTROLUX PROFESSIONAL VP2

Electrolux Professional VP2 document

Provided by PartHubz

parthubz.com

833-700-8006 | support@parthubz.com

Electrolux Professional
Restaurants

Greens Machine

The Evolution of Vegetable Drying

Electrolux

Crisp Fresh Colorful

18 lb
in less then 5 minutes

There is nothing worse than pale and soft vegetables. It doesn't attract customers and will not give a profitable dish price.
Ensuring crisp, fresh and colorful vegetables always, is one of the most important tasks in the daily work of the kitchen. With the VP2 Greens Machine, chefs can deliver great tasting produce as part of their menus.

Available in multiple voltages:
115V and 220V available

Longer Shelf life
with crisp dry produce

Preserved Freshness
delivered to customers always

Higher Profitability

Ease of Use

Click here to see the more of what VP2 can do for you

Delivering on our promise.
Simple. Fast. Safe.

- **Guarantee crispier and fresher produce** by extracting more water off surface thus saving also on dressings
- **Preserve dryer produce longer** in inventory, saving you money in the longterm
- **Dry produce quicker** with the new internal perforated basket spinning at 400 RPM
- **Longer lasting equipment** designed with a tough stainless steel body
- **Keep your staff safe** with the new interlocked lid's magnetic safety switch
- **Move & Use** the VP Vegetable Dryer anywhere in the kitchen with a built-in water reservoir and wheels
- **Reliable results delivered everytime** with the VP's new high powered 1/2 HP motor

Excellence in features, ergonomics and design

Productivity

Basket Design - Rotating at 400 RPM, the newly designed perforated basket extracts more moisture quicker.

Stainless Steel Body - Resists rust and corrosion for longer life.

Ergonomics

Move & Use - Delivered with locking casters makes the VP2 a mobile unit in any kitchen.
Casters with breaks on every model.

Waterproof Switches - Waterproof On & Off switches placed at operational ergonomic height.

Safety

MSS: Magnetic Safety Switch - The newly designed outer lid engages with the basket to ensure effective function, start and stop.

Water Reservoir - VP2 has an included water collecting reservoir with water level sensor (also included is a direct drain option).

ITEM #

MODEL #

NAME #

SIS #

AIA #

Spin Dryers
VP2 "Greens Machine" Vegetable Dryer, 20Gal (75Lt) with basket, stainless steel drum

Spin Dryers

VP2 "Greens Machine" Vegetable Dryer, 20Gal (75Lt) with basket, stainless steel drum

600095 (VP2)	VP2 "Greens Machine" Vegetable Dryer, 20Gal (75Lt) with basket, stainless steel drum

Short Form Specification

Item No. _____

VP2 "Greens Machine" Vegetable Dryer, 20Gal (75Lt) with basket, stainless steel drum, floor model, capacity approximately 16 heads of lettuce, adjustable built-in 5 minute timer, ON & OFF buttons at ergonomic height, built-in water collection reservoir, stainless steel outer drum (body), 3 casters with brakes.

SPECS: 370 watts (1/2HP) motor, 115v/60/1, 2.7 amps, NEMA 5-15P, 8ft cord

Intertek Intertek 5-15P

APPROVAL: _____

Main Features

- Dries up to 16 heads of lettuce in under 5 minutes. Other green leaves and cut vegetables can be dried as well.
- Delivered with plastic basket, equipped with handle grips for easy loading/unloading.
- Built-in 5 minute timer protected by hinged cover.
- ON/OFF water proof buttons at ergonomic height.
- Electrical braking system to stop basket rotation in a few seconds at the end of the cycle or when lid is opened.
- Ergonomically fits under working kitchen counters for storage after use.
- Built in reservoir, water can be easily collected. No need of floor drain (optional).
- Easy lock casters.
- ETL electrical and sanitation listed.
- 2 year parts warranty, 1 year labor.

Construction

- Stainless steel external drum (body).
- Removable plastic inner basket, 20Gal (75Lt) capacity.
- Hinged plastic lid with built-in safety device.
- Mounted on casters with brakes.
- Water reservoir (built-in) equipped with level indicator.
- Basket rotates at approximately 400 RPM.

Included Accessories

- 1 of Additional basket with holes — PNC 653788

Optional Accessories

- Additional basket with holes — PNC 653788 ☐

Spin Dryers
VP2 "Greens Machine" Vegetable Dryer, 20Gal (75Lt) with basket, stainless steel drum

Front

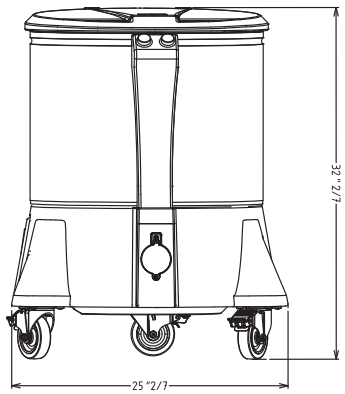

Top

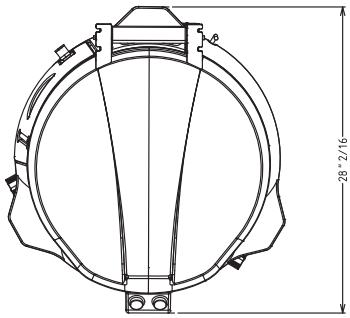

EI = Electrical connection

Side

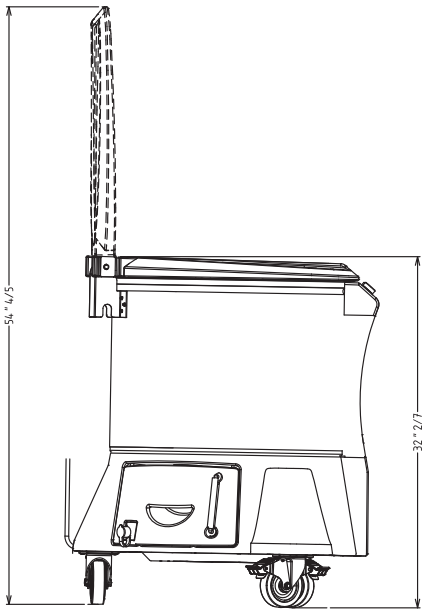

Electric

Supply voltage:	
600095 (VP2)	115 V/1N ph/60 Hz
Total Watts:	0.373 kW
Horsepower:	1/2 HP

Key Information:

External dimensions, Width:	26 9/16" (675 mm)
External dimensions, Depth:	26 9/16" (675 mm)
External dimensions, Height:	32 1/64" (813 mm)
Shipping weight:	121 lbs (55 kg)

Spin Dryers
VP2 "Greens Machine" Vegetable Dryer, 20Gal (75Lt) with basket, stainless steel drum

The company reserves the right to make modifications to the products without prior notice. All information correct at time of printing.

2016.09.30

Discover the Electrolux Excellence and share more of our thinking at www.electroluxusa.com/professional

Follow us on

Excellence
with the environment in mind

- All our factories are ISO 14001-certified
- All our solutions are designed for low consumption of water, energy, detergents and harmful emissions
- In recent years over 70% of our product features have been updated with the environmental needs of our customers in mind
- Our technology is ROHS and REACH compliant and over 95% recyclable
- Our products are 100% quality tested by experts

The Company reserves the right to change specifications without notice. Pictures are not contractual.

Commercial Kitchen Equipment Parts

Find more Electrolux Professional equipment resources at

parthubz.com/equipment/electrolux-professional

Need parts or service?

Call 833-700-8006

support@parthubz.com

parthubz.com