Commercial Kitchen Equipment Parts

FRYMASTER 3FQG30U

Frymaster 3FQG30U Parts Diagram

Provided by PartHubz

parthubz.com

833-700-8006 | support@parthubz.com

FRYMASTER

FilterQuick™ FQE30

Electric Fryer

Parts Manual

This manual is updated as new information and models are released. Visit our website for the latest manual.

8 1 9 7 1 1 7
Part Number: FRY_P_8197117 02/2018

WELBILT

NOTICE

IF, DURING THE WARRANTY PERIOD, THE CUSTOMER USES A PART FOR THIS FRYMASTER EQUIPMENT OTHER THAN AN UNMODIFIED NEW OR RECYCLED PART PURCHASED DIRECTLY FROM FRYMASTER, OR ANY OF ITS FACTORY AUTHORIZED SERVICERS, AND/OR THE PART BEING USED IS MODIFIED FROM ITS ORIGINAL CONFIGURATION, THIS WARRANTY WILL BE VOID. FURTHER, FRYMASTER DEAN AND ITS AFFILIATES WILL NOT BE LIABLE FOR ANY CLAIMS, DAMAGES OR EXPENSES INCURRED BY THE CUSTOMER WHICH ARISE DIRECTLY OR INDIRECTLY, IN WHOLE OR IN PART, DUE TO THE INSTALLATION OF ANY MODIFIED PART AND/OR PART RECEIVED FROM AN UNAUTHORIZED SERVICER.

NOTICE

This appliance is intended for professional use only and is to be operated by qualified personnel only. A Factory Authorized Servicer (FAS) or other qualified professional should perform installation, maintenance, and repairs. Installation, maintenance, or repairs by unqualified personnel may void the manufacturer's warranty.

⚠ DANGER

Improper installation, adjustment, maintenance or service, and unauthorized alterations or modifications can cause property damage, injury, or death. Read the installation, operating, and service instructions thoroughly before installing or servicing this equipment.

⚠ DANGER

The front ledge of this appliance is not a step! Do not stand on the appliance. Serious injury can result from slips or contact with the hot oil.

⚠ WARNING

Do not attach accessories to this fryer unless fryer is secured from tipping. Personal injury may result.

⚠ DANGER

Adequate means must be provided to limit the movement of this appliance without depending on or transmitting stress to the electrical conduit. A restraint kit is provided with the fryer. If the restraint kit is missing contact your local KES.

⚠ DANGER

Prior to movement, testing, maintenance and any repair on your Frymaster fryer, disconnect all electrical power from the fryer.

FILTERQUICK™ FQE30 SERIES ELECTRIC FRYERS PARTS
TABLE OF CONTENTS

CAUTIONARY STATEMENTS i

CHAPTER 1: Parts List

1.1 Accessories 1-1
1.2 Doors, Sides, Tilt Housings, Top Caps and Casters 1-2
1.3 Drain System Components 1-3
1.4 Electronics and Wiring Components 1-4
1.4.1 Component Boxes 1-4
1.4.2 Contactor Boxes 1-6
1.4.3 Heating Element Assemblies and Associated Parts 1-7
1.4.3.1 Element Assemblies and Hardware 1-7
1.4.3.2 Element Tube Assemblies 1-9
1.4.4 Controllers 1-9
1.4.5 Wiring 1-10
1.4.5.1 Contactor Box Wiring Assemblies 12-Pin Dual Vat 1-10
1.4.5.2 Contactor Box Wiring Assemblies 12-Pin Full Vat 1-10
1.4.5.3 Contactor Box Wiring Assemblies 6-Pin Left Element 1-11
1.4.5.4 Contactor Box Wiring Assemblies 9-Pin Right Element 1-11
1.4.5.5 Main Wiring Harnesses 1-12
1.4.5.6 Component Box, Filter Pump and Basket Lift Wiring Harnesses 1-13
1.4.5.7 Component Box to Filter Pump Harness 1-13
1.4.5.8 Basket Lift Harness 1-14
1.4.5.9 Interface Board to Controller Wiring Harness 15-Pin 1-14
1.4.5.10 FilterQuick™ 3000, MIB, AIF and ATO Wiring Harnesses 1-14
1.4.5.11 Control Panel Frames and Push-Pull Road Assembly 1-15
1.5 Filtration System Components 1-15
1.6 Filtration Electronic Components 1-16
1.6.1 Manual Interface Board (MIB) Assembly 1-16
1.6.2 Automatic Intermittent Filtration (AIF) Board Assembly 1-17
1.6.3 FilterQuick PCB/Controller Board Matrix 1-17
1.6.4 Control Panel Frames and Push-Pull Rod Assembly 1-18
1.6.5 Control Panel Frames and Push Button Assembly 1-19
1.7 Frypot Assemblies and Associated Parts 1-20
1.8 Oil Return Manifolds 1-21
1.9 Return Valve 1-21
1.10 Auto Top-Off Components 1-22
1.10.1 JIB Cradle, JIB Box, JIB Cap/Pick-Up Assembly, and ATO Board Assemblies 1-23
1.10.2 ATO Liquid Shortening Pump Assembly 1-23
1.10.3 ATO Solid Shortening Pump Assembly 1-24
1.10.4 Shortening Melting Unit 1-25
1.11 Bulk Oil Components 1-26
1.11.1 Bulk Manifold and Accessories 1-26
1.11.2 Bulk Dispose Waste Valve 1-28
1.11.3 RTI Test Box 1-28
1.12 Basket Lift Assembly and Associated Parts 1-29
1.13 Oil Quality Sensor (OQS) and Associated Parts 1-31
1.14 Wiring Connectors, Pin Terminals and Power Cords 1-32
1.15 Fasteners… 1-33
1.16 FilterQuick™ Electric Simplified Wiring 1-34
1.16.1 FilterQuick™ Electric Simplified Wiring with Push Button 1-34
1.16.2 FilterQuick™ Electric Simplified Wiring with Push Pull Handles 1-35

FILTERQUICK™ FQE30 SERIES ELECTRIC FRYERS
CHAPTER 1: PARTS LIST

1.1 Accessories

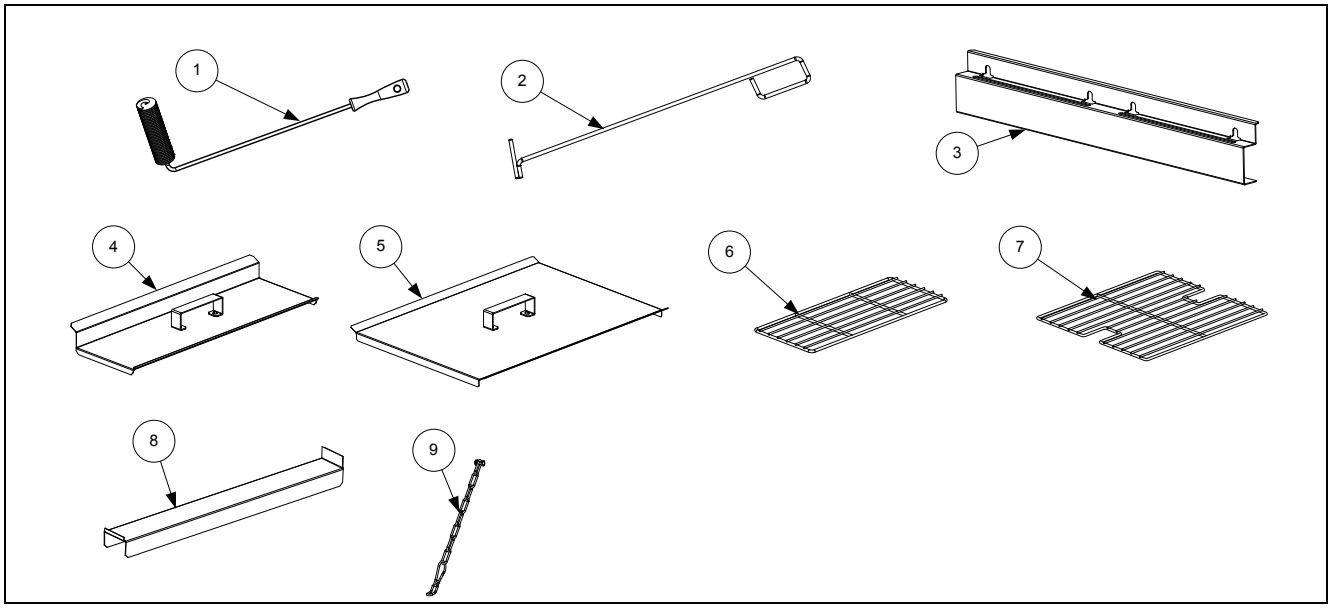

ITEM	PART #	COMPONENT
1	8030278	Brush, Frypot
2	8030388	Fryers Friend
3	2307495	Hanger, Basket Two/Four Station (BK 2309290)
	2307497	Hanger, Basket Three Station (BK 2309292)
4	1068329	Cover, Dual-Vat Frypot
5	1068325	Cover, Full-Vat Frypot
6	8030132	Rack, Full-Vat Basket Support
7	8030106	Rack, Dual-Vat Basket Support
8	1086157	Connecting Strip, Frypot
9	8260900	Kit, Chain Restraint
*	8030002	Powder, Filter (80- 1-Cup Applications)
*	8030445	Pack, 100-Sheet Filter Paper 16.5 X 25.5

* Not illustrated.

1.2 Doors, Sides, Tilt Housings, Top Caps and Casters

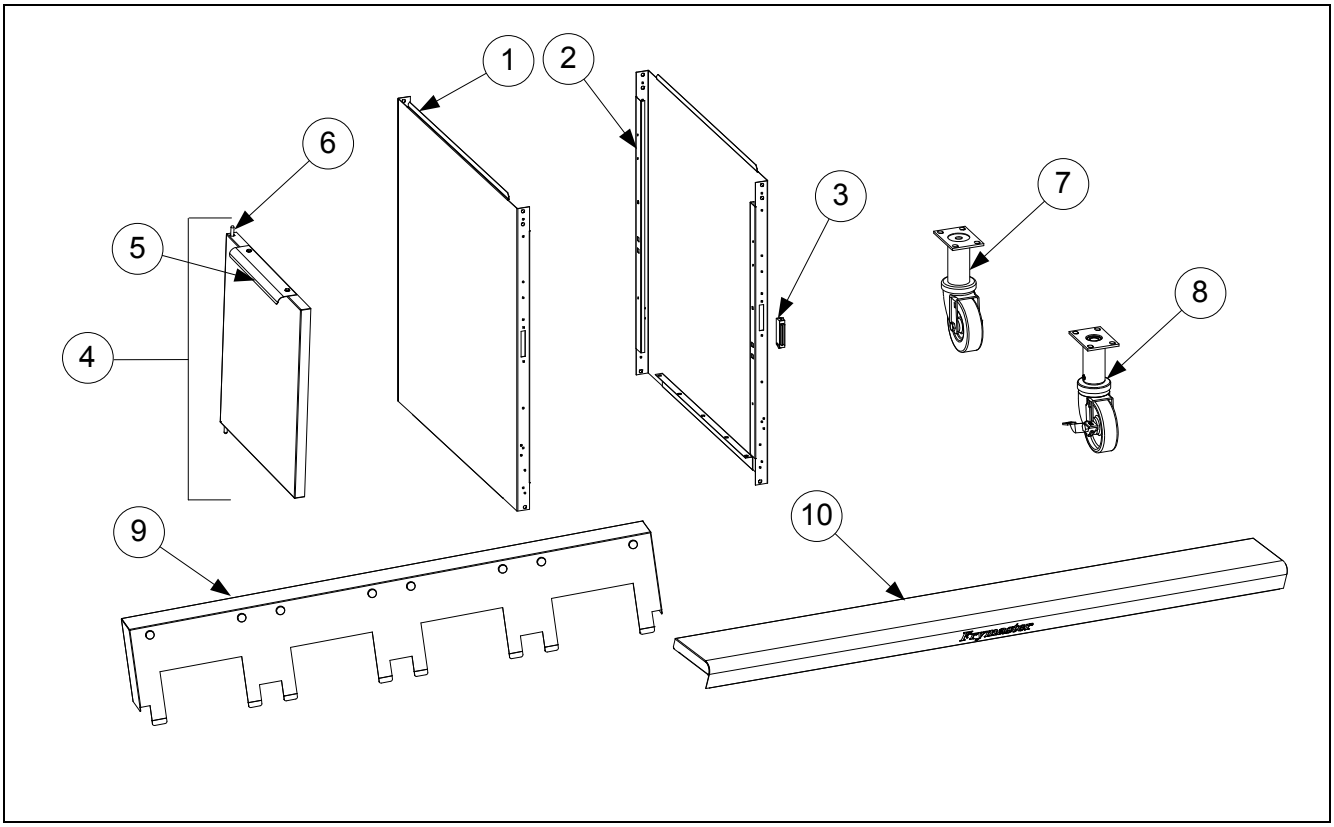

ITEM	PART #	COMPONENT
1	2310323	Side, Standard Cabinet Left SS (use 2210323 for Enameled Steel)
2	2320323	Side, Standard Cabinet Right SS (use 2220323 for Enameled Steel)
3	8101105	Magnet, Door (vertical) (use 8102346 for horizontal over filter pan)
4	1064397	Door, Left or Right (use 1080825 for door w holder)
5	2304960	Handle, Eurolook Door
6	1064067	Pin Assembly, Door
*	8100275	Spring, Door Pin
*	8090970	Retaining Ring
*	2307192	Hinge, Door Lower
*	2206097	Holder, Manual
7	8100327	Caster 4" without Brake -Rear
8	8100944	Caster 3" with Brake -Front
9		Tilt Housing (Housing for four station fryer shown)
	8237891	Two Station
	8237892	Three Station
	8237893	Four Station
	8237894	Five Station
10		Top Cap
	8242354	Two Station ***(Also requires four 8090078 10-32 Nutserts)***
	8242355	Three Station ***(Also requires six 8090078 10-32 Nutserts)***
	8238961	Four Station ***(Also requires eight 8090078 10-32 Nutserts)***
	8238962	Five Station ***(Also requires ten 8090078 10-32 Nutserts)***
*	8160971	Gasket, Top cap/Frypot (1 needed per frypot)

* Not illustrated.

1.3 Drain System Components

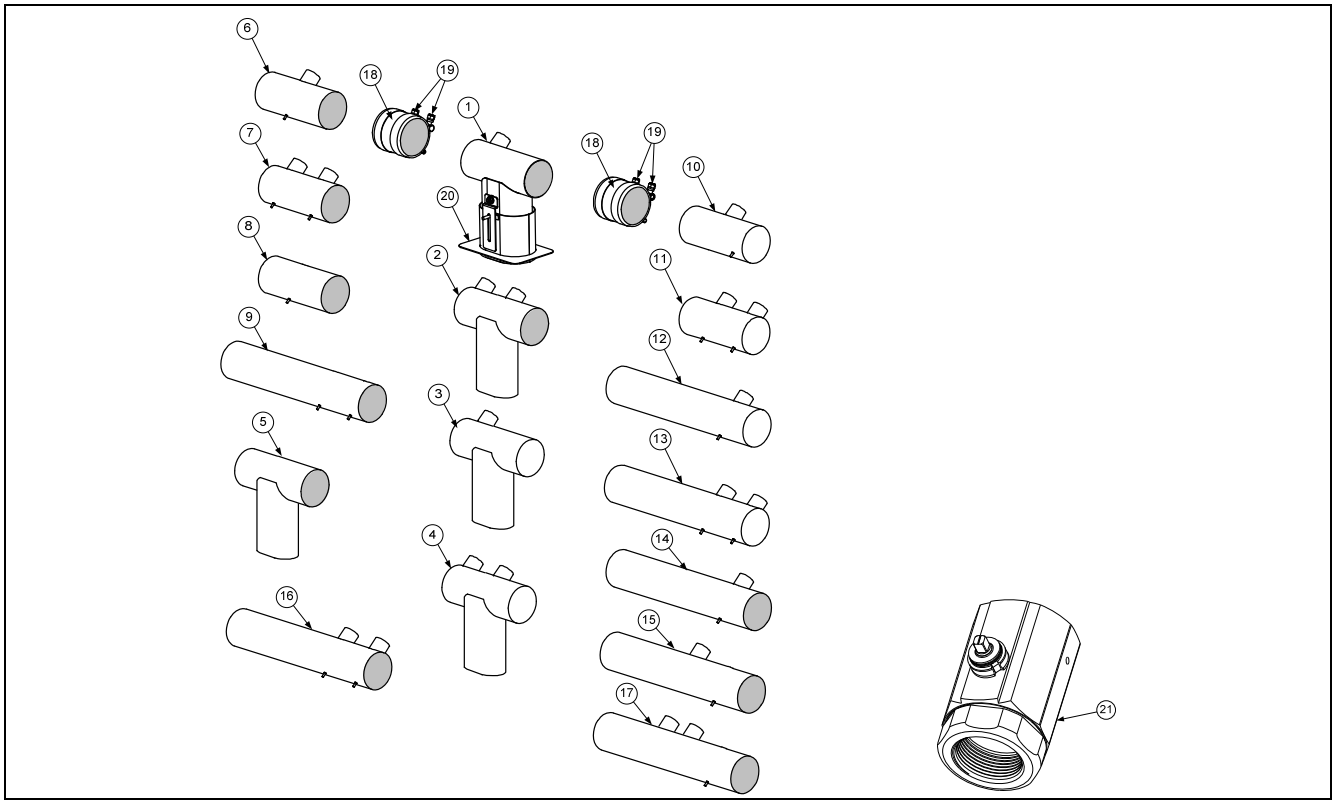

ITEM	PART#	COMPONENT
1	1085806	Drain Tube, Dump Full-Vat Left Closed/Right End Open
2	1085854	Drain Tube, Dump Dual-Vat Left Closed/Right End Open
3	1085836	Drain Tube, Dump Full-Vat Left Closed Both Ends
4	1085856	Drain Tube, Dump Dual-Vat Left Closed Both Ends
5	1085842	Drain Tube, Dump Full-Vat Left Closed/Right End Open
6	8236019	Drain Tube, Full-Vat, Short, Open Both Ends
7	8236021	Drain Tube, Dual-Vat, Short, Open Both Ends
8	8103550	Drain Tube, Short, Open Both Ends
9	8103551	Drain Tube, Long, Open Both Ends
10	8236240	Drain Tube, Short Full-Vat Left Open/Right End Closed
11	8236242	Drain Tube, Short Dual-Vat Left Open/Right End Closed
12	8236202	Drain Tube, Long Full-Vat Left Open/Right End Closed
13	8236114	Drain Tube, Long Dual-Vat Left Open/Right End Closed
14	8236117	Drain Tube, Long Full-Vat Open Both Ends 15.31”
	8238831	Drain Tube, Long Full-Vat Open Both Ends 18.95”
15	8238833	Drain Tube, Long Full-Vat Open Both Ends 15.49”
16	8236115	Drain Tube, Long Dual-Vat Open Both Ends 15.31”
	8238840	Drain Tube, Long Dual-Vat Open Both Ends 18.95”
17	8238839	Drain Tube, Long Dual-Vat Open Both Ends 15.49”
18	8160772	Sleeve
19	8090969	Clamp
*	8160665	Vinyl Cap
*	8130336	Plug, ½” NPT Square Head Pipe
*	8111071	Tubing, ¼-inch OD Teflon Vent (sold by the foot)
20	8237915	Guard, Filter Lid Splash
21	8103755	Valve, 1¼-inch NPT Rotary Actuator

* Not illustrated.

1.4 Electronics and Wiring Components

1.4.1 Component Boxes

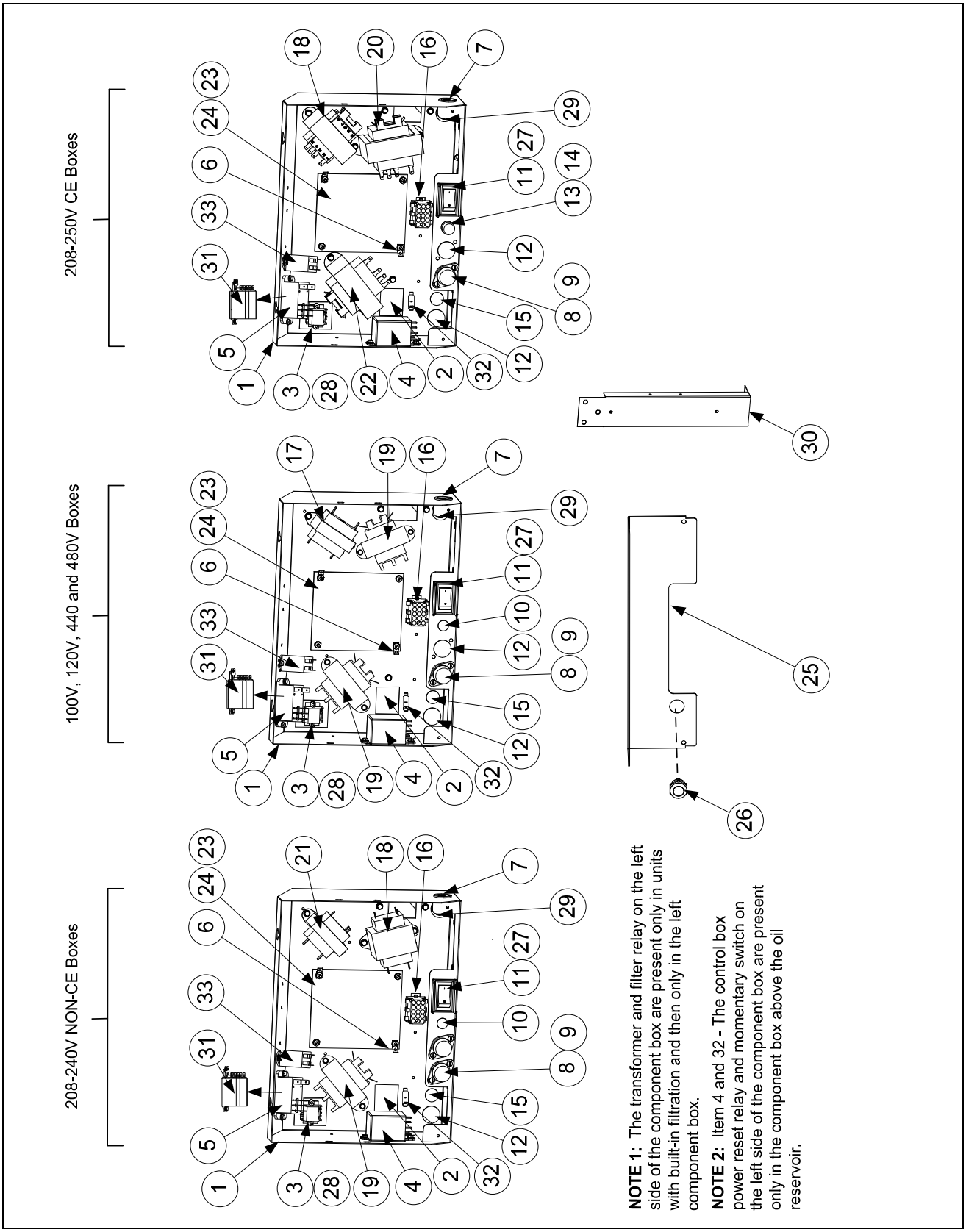

1.4.1 Component Boxes cont.

ITEM	PART #	COMPONENT
1	1082483	Box Assembly, Component
2	2003300	Bracket, Component Box Strain Relief
3	8101164	Terminal Block
√ 4	8074770	Relay, DPDT 20A 240V *(resets control power; right hand boxes only; one in each control box in some units.)*
√ 5	8074482	Relay, Filter 2 Pole 30A DPDT 24VDC
6	8070037	Terminal, ¼-inch Push-on
7	8070121	Bushing, Heyco Plastic AB-625-500
8	8070922	Holder, Buss Fuse HPS Screw Type
9	8072278	Fuse, 20 AMP
10	8102446	Plug, Button .50 Heyco Double "D"
√ 11	8074036	Switch, Power
	8073575	Plug, Carling Switch Hole *(used on some models without a switch)*
12	8071947	Plug, Button .875 Dome
13	8071321	Holder, AGC Panel Mount ¼" Fuse *(Some models use item 10 here.)*
14	8071597	Fuse, 3 AMP, 250V Slow-Blow
*	8071174	Fuse, 3 AMP, 250V Slow-Blow
15	8102445	Plug, Button .625 Heyco Double "D"
16	1065750	Harness Assembly, RE FV Control
	1065751	Harness Assembly, RE DV Control
√ 17	8070855	Transformer, 100-120V/12V 20VA Controller
	8074967	Transformer, 100-120V/24V 75VA (**Used in DV component box**)
√ 18	8070800	Transformer, 100-120V/24V 50VA Filter ***(Used in FV component boxes)***
√	8074933	Transformer, 120/208/240/24V 75VA Filter ***(Used in DV component box)***
	8074968	Transformer, 208-250V/24V 75VA (**Used in DV component box**)
	8122126SP	Transformer, 208-250V/24V 75VA (**Used in DV component box**)
	8074967	Transformer, 100-120V/24V 75VA (**Used in DV component box**)
√ 19	8072181	Transformer, 100-120V/24V 62VA Filter
	8070680	Transformer, 208/240V/24V 20VA Filter/Contactor
√ 20	8072191	Transformer, 208-240V/12V 30VA Controller
√ 21	8070979	Transformer, 208-240V/12V 43VA Controller
√ 22	8072180	Transformer, 100-120V/24V 50VA Filter/Contactor
23	8090349	Spacer, 4mm X 6mm Aluminum
24		Interface Board
√	8262260	Standard Full or Dual Vat Interface Board *(includes sound harness)*
*	8074403	Speaker, 4-Watt SMT
25	2200829	Guard, Finger w/ switch opening
	2200828	Guard, Finger w/ out switch opening
26	8074678	Switch, Momentary Flush JIB Reset
27	2205038	Guard, RE Box Switch
28	8160217	Paper, Insulating Terminal Block
29	8100045	Bushing, .875 Diameter 11/16"
30	2006654	Brace, Component Box
√ 31	8074346	Relay, 120V DPDT 20A
32	8072659	Switch, Momentary (*resets control power; located in box over JIB.*)
33	8075623	Relay, 24VDC SPDT
*	8262249	RE Hood/Ansul Interlock Kit (includes terminal block, wires and connectors)

* Not illustrated.
√ Recommended parts.

1.4.2 Contactor Boxes

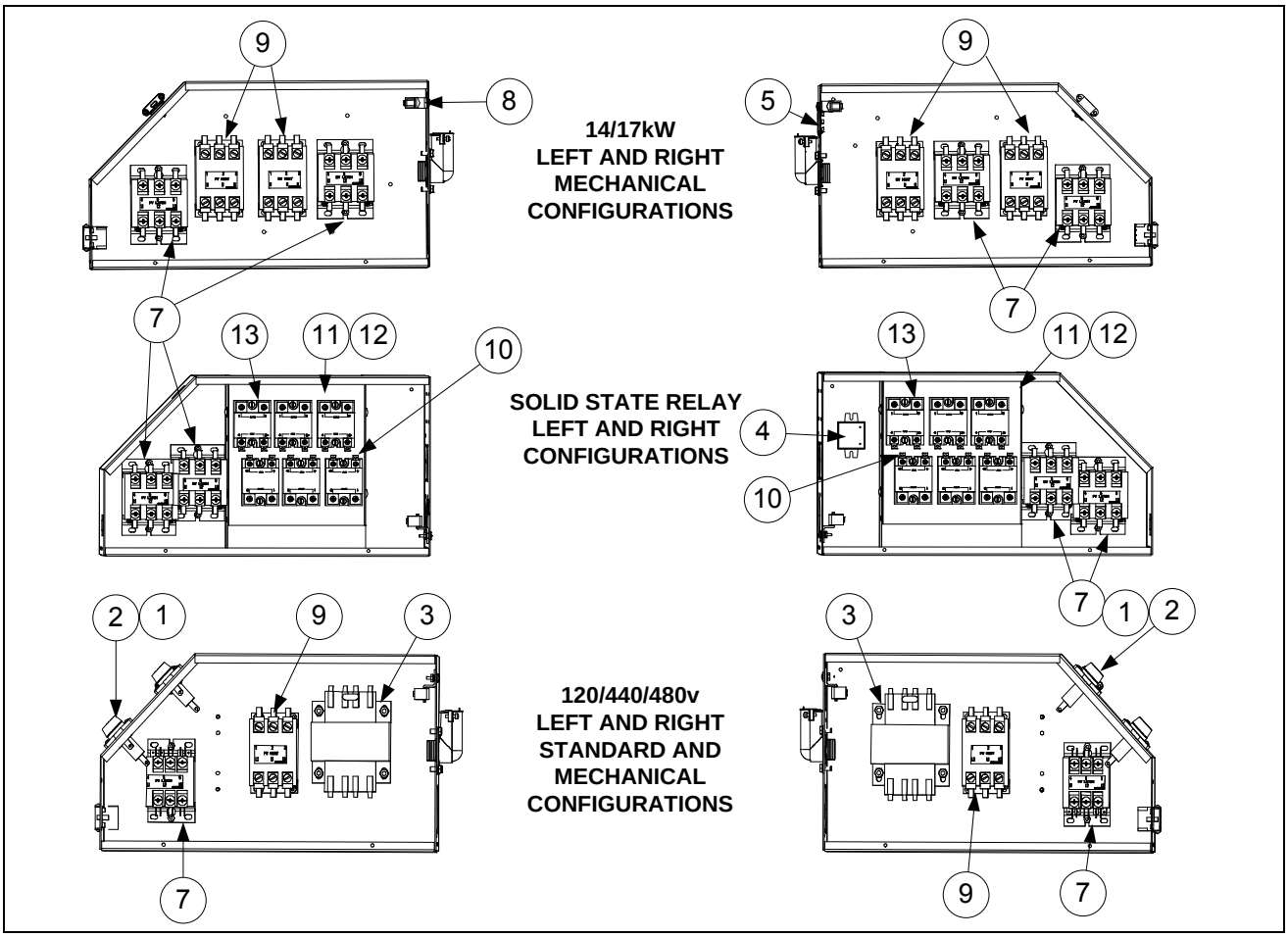

NOTES: The configurations illustrated show all possible components, but a particular configuration may not include all the components shown.

ITEM	PART #	COMPONENT
1	8072278	Fuse, 20 Amp
2	8070922	Holder, Bus Fuse
3	8070331	Transformer, 220V-480V 250VA
4	1066204	Filter Assembly, EPRI (Used on some CE WYE configurations)
5	8102554	Plug, Cord Cutout 1.125 Button
6	8071947	Plug, .875 Diameter Dome
√ 7	8101202	Contactor, 24V 40 Amp Mechanical ***(Latch)***
8	8070070	Terminal, Ground Lug
√ 9	8072284	Contactor, 24V 50 Amp Mechanical ***(Heat)***
10	8070037	Terminal, ¼-inch Push-on
11**	8068673	Heatsink Assembly, FV Solid State Relay (See components below)
		Components of Items 12 and 13
12	8261562	Kit Relay, Solid State 40 Amp 280V with Heatsink
13	8072749	Heatsink, Solid State
*	2210482	Cover, Left Contactor Box
*	2220482	Cover, Right Contactor Box
*	8070012	Relay, Tilt Switch 18 Amp 1/3 HP 24 V Coil

* Not illustrated. ** Full Vat has three relays (8261562); Dual-Vat has six relays.
√ Recommended parts.

1.4.3 Heating Element Assemblies and Associated Parts

1.4.3.1 Element Assemblies and Hardware

FULL-VAT ELEMENT ASSEMBLY

DUAL-VAT ELEMENT ASSEMBLY

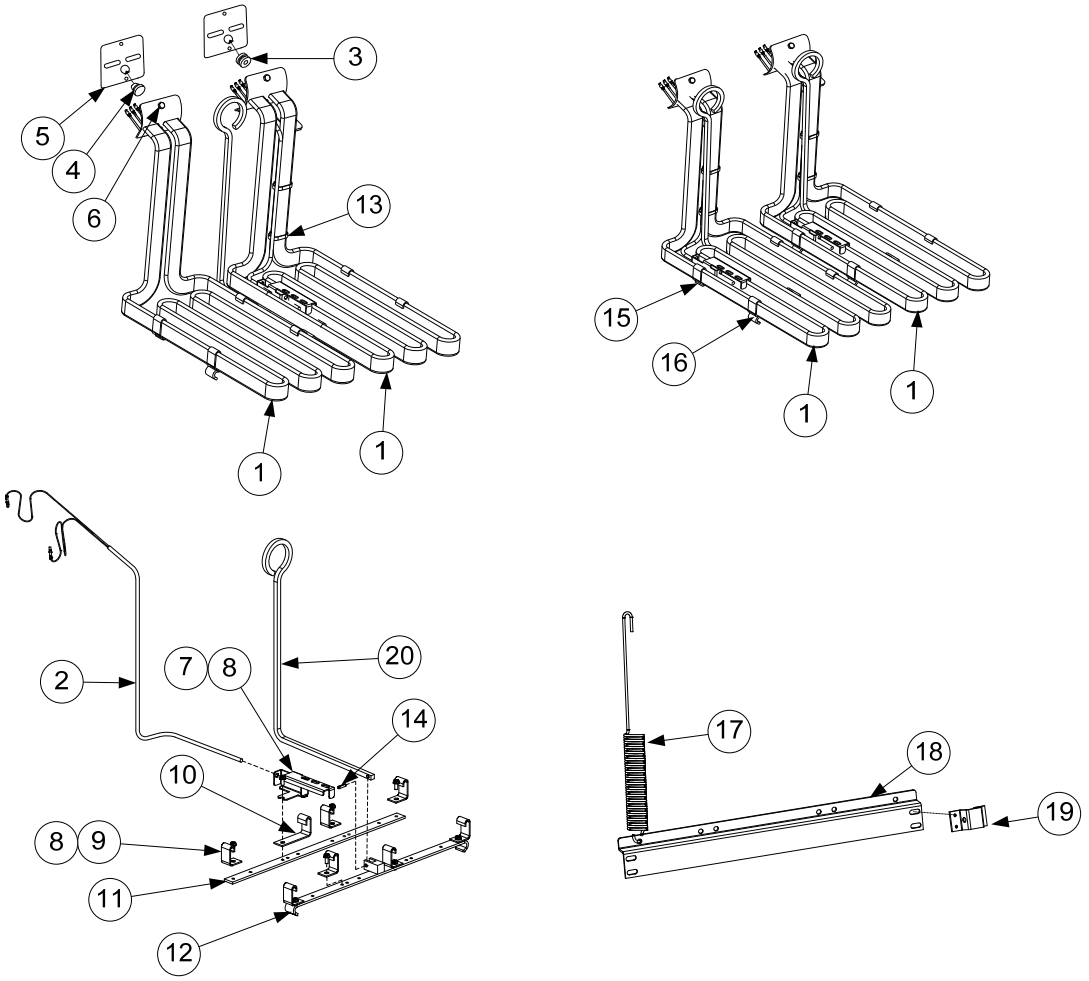

NOTES:
The dual-vat assembly is almost the same as the full-vat assembly except for having two of Items 2, 3, 7, 14, 15, 16 and 20. The only difference between element assemblies for different voltage and kW ratings is the element itself (Item 1).

Items 17, 18 and 19 are shown as associated parts. The are not part of either assembly.

NOTE: These elements apply only to FQE30 Series Fryers.

1.4.3.1 Element Assemblies and Hardware cont.

ITEM	PART #	COMPONENT
1		Element Kits – *includes gaskets, grommets, tie wraps, screws and nuts.*
	8262198	200V 7.0 kW **(220V 8.5kW used in some export 3-phase 4-wire WYE units)**
	8262201	200V 8.5 kW
	8262192	208V 7.0 kW
	8262197	208V 8.5 kW
	8262200	220V 7.0 kW **(220V 8.5kW used in some export 3-phase 4-wire WYE units)**
	8262193	230V 7.0 kW
	8262199	230V/400V 7.0 kW/8.5 kW**(220V 8.5kW used in some export 3-phase 4-wire WYE units)**
	8262194	240V 7.0 kW
	8262204	400V 8.5kW
	8262195	440V 7.0 kW
	8262202	440V 8.5 kW
	8262196	480V 7.0 kW
	8262203	480V 8.5 kW
√ 2	8262212	Probe, Temperature RE – *includes tie wraps and grommet.*
	8074324	Probe, Temperature Fast Ready
3	8160681	Grommet, Probe
4	8160480	Plug, .375-inch Dome
5	8160688	Gasket, Element
6	8091003	Screw, 10-32 X ⅜-inch Hex Head SS
*	8090766	Nut, 10-32 Keps Hex Head SS
*	2304028	Wrench, Element Tube Nut Spanner
7	2303714	Bracket, Temperature Probe 7.0 kW (14kW)
	2300784	Bracket, Temperature Probe 8.5 kW (17kW)
8	8090518	Screw, 8-32 X ⅜-inch Slotted Hex Head
9	2601201	Clamp, Element (Short)
10	2300781	Clamp, Element (Long)
11	2304902	Support, Full-Vat Element Rear
12	8235621	Support, Full-Vat Element Front
13	8090567	Tie-Wrap, Metal
14	8101212	Pin, .125 X .5-inch Split
15	2304903	Support, Dual-Vat Element Rear Dual Vat
16	8238085	Support, Dual-Vat Element Front Dual Vat -14kW
	8238086	Support, Dual-Vat Element Front Dual Vat -17kW
17	8103030	Spring, Element Lift Left
	8103031	Spring, Element Lift Right
18	2201190	Bracket, Lower Spring Single Foot Print
	2200464	Bracket, Lower Spring
19	2200733	Bracket, Lower Spring Mating
20	8101233	Handle, Element Lift

* Not illustrated.
√ Recommended parts.

1.4.3.2 Element Tube Assemblies

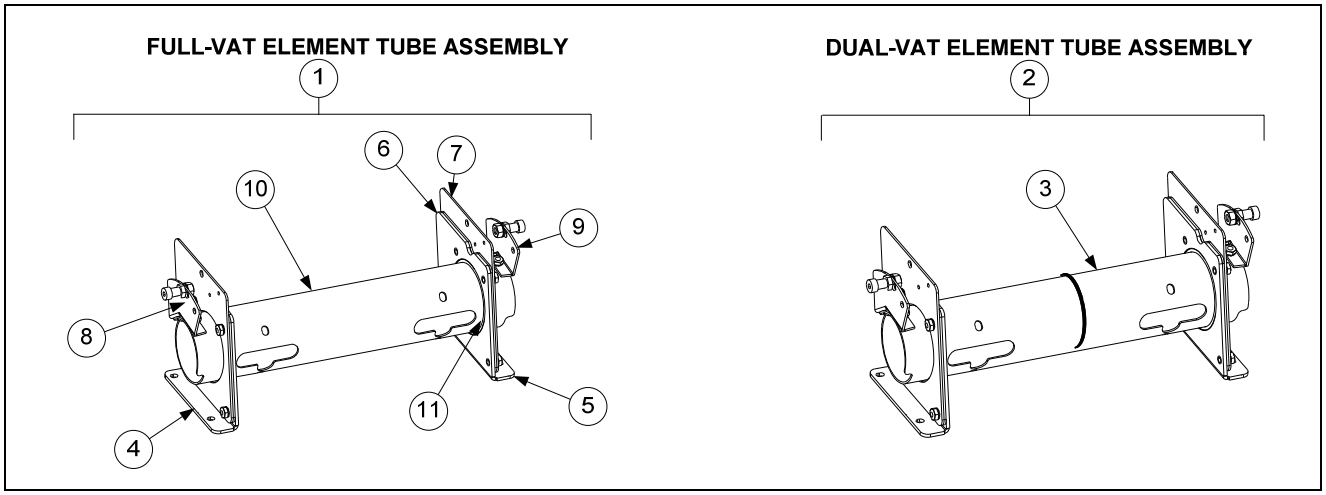

ITEM	PART #	COMPONENT
1	1080297	Tube Assembly, Full-Vat 14kW
	1080293	Tube Assembly, Full-Vat 17 kW
2	1080298SP	Tube Assembly Dual-Vat 14kW
	1080295	Tube Assembly Dual-Vat 17 kW
3	8103246	Bushing and Tube Assembly, Dual-Vat
4	1080315	Bracket Assembly, LH Element Tube Support
5	1080316	Bracket Assembly, RH Element Tube Support
6	2200122	Plate, Element Tube Support Inner
7	2200123	Plate, Element Tube Support Outer
8	1067651	Bracket Assembly, LH Upper Spring ***(use 1066569 for 17kW)***
9	1067652	Bracket Assembly, RH Upper Spring ***(use 1066570 for 17kW)***
10	8102992	Tube, Full Vat Element Mounting
11	8102993	Bushing, Tube End Teflon
*	8262598	Kit, Tilt Switch
*	8074742	Switch, Long Lever High Temp

* Not illustrated.

1.4.4 Controllers

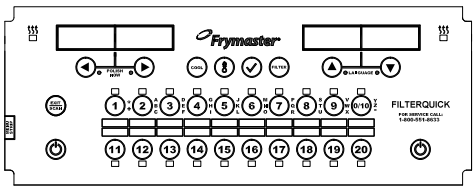

NOTE: See Page 1-14 for Interface Board to Controller Wiring Harness

ITEM	PART #	COMPONENT
√ 1	8263301	Replacement FilterQuick™ Controller
*	8263346	Software Kit, SD Card
*	2601264	Bezel Two Position (Used for 2, 4 and 5 battery) **Used with the push button**
*	2601265	Bezel Three Position (Used for 3 and 5 battery) **Used with the push button**
*	2600635	Bezel Two Position (Used for 2, 4 and 5 battery) **Used with the knob**
*	2600684	Bezel Three Position (Used for 3 and 5 battery) **Used with the knob**
*	8262458	Speaker SMT

√ Recommended parts.
* Not illustrated.

1.4.5 Wiring

1.4.5.1 Contactor Box Wiring Assemblies – 12-Pin Dual-Vat C-1

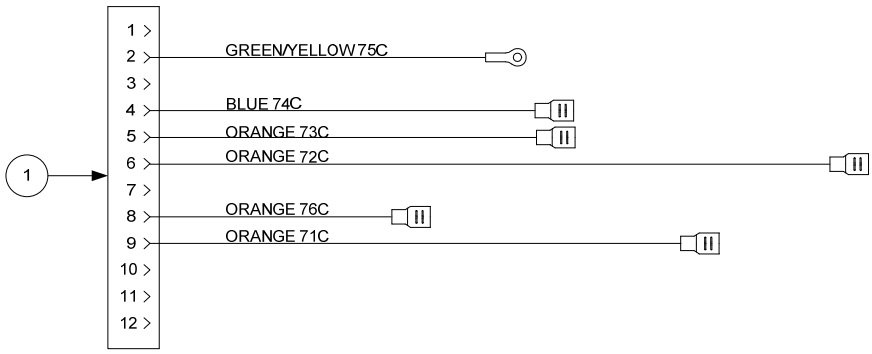

ITEM	PART #	COMPONENT
	1065980SP	Contactor Box Harness Assembly Dual Vat
1		Standard

1.4.5.2 Contactor Box Wiring Assemblies – 12-Pin Full-Vat C-1

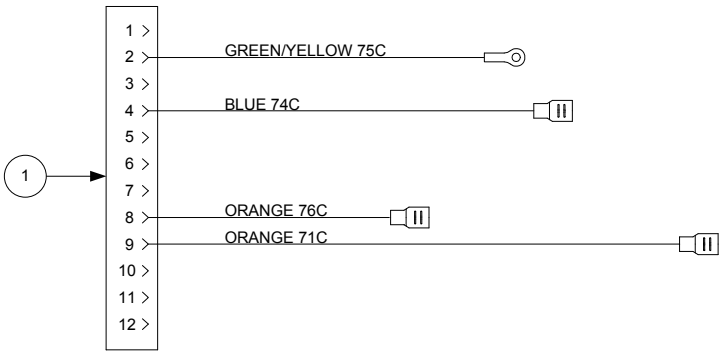

ITEM	PART #	COMPONENT
	1066031SP	Contactor Box Harness Assembly Full Vat
1		Standard

1.4.5.3 Contactor Box Wiring Assembly – 6-Pin (Left Element)

ITEM	PART #	COMPONENT
1	1068744SP	14/17 kW Mechanical Contactor
	1067851SP	High Amp Mechanical Contactor

1.4.5.4 Contactor Box Wiring Assembly – 9-Pin (Right Element)

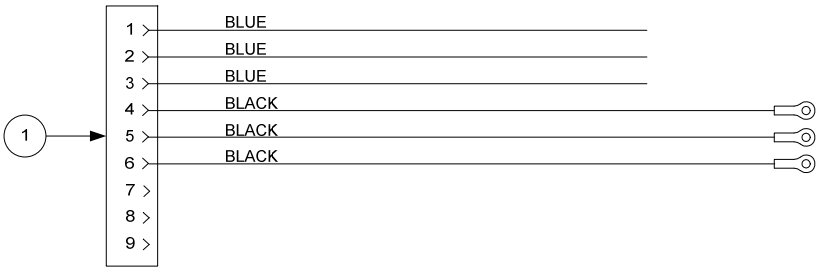

ITEM	PART #	COMPONENT
1	1068745SP	14/17 kW Mechanical Contactor
	1067852SP	High Amp Mechanical Contactor

1.4.5.5 Main Wiring Harnesses

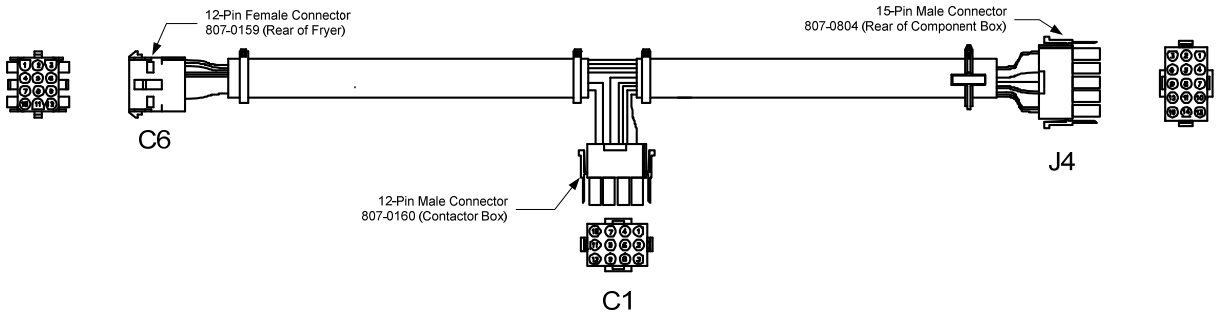

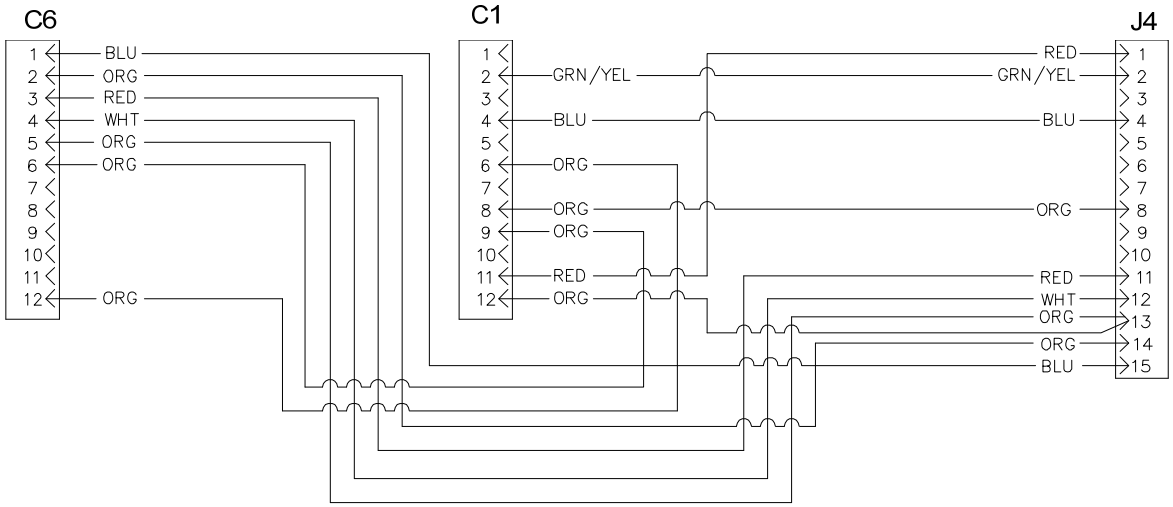

FULL VAT HARNESS
8074705

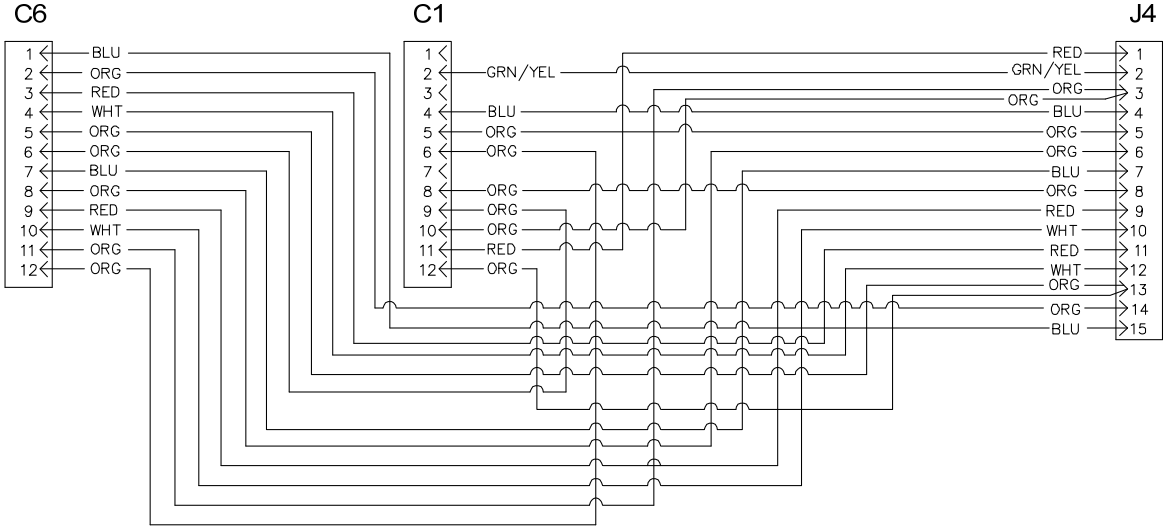

DUAL VAT HARNESS
8074773

1.4.5.6 Component Box, Filter Pump and Basket Lift Wiring Harnesses

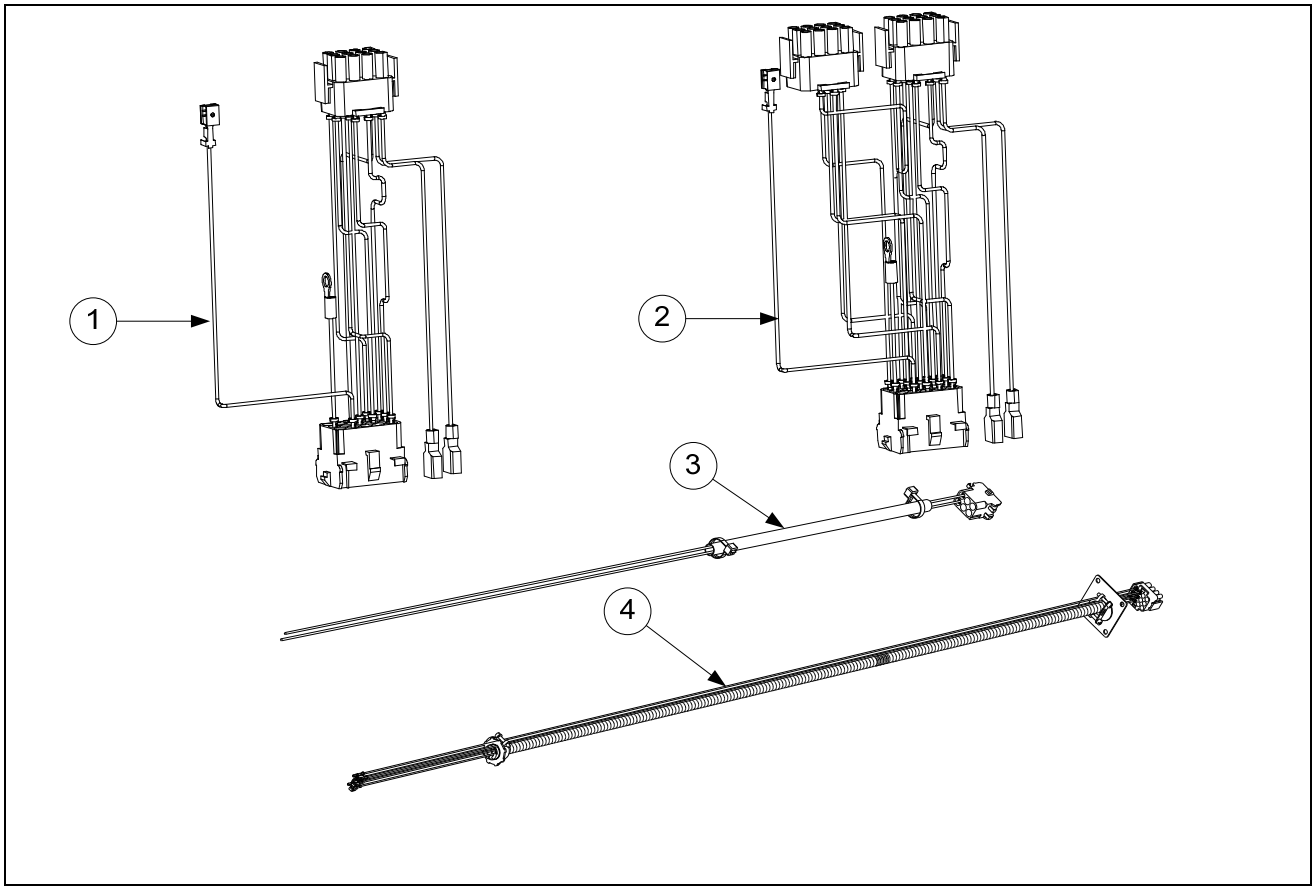

ITEM	PART #	COMPONENT
1	1065750SP	Full Vat Control Harness J4 to J2 ***(Standard)***
2	1065751SP	Dual Vat Control Harness J4 to J1 and J2 ***(Standard)***
3	1080490	Filter Pump C2 to Component Box Wiring Harness
4	1065962SP	Basket Lift Harness Assembly ***(Standard)***

1.4.5.7 Component Box to Filter Pump Harness

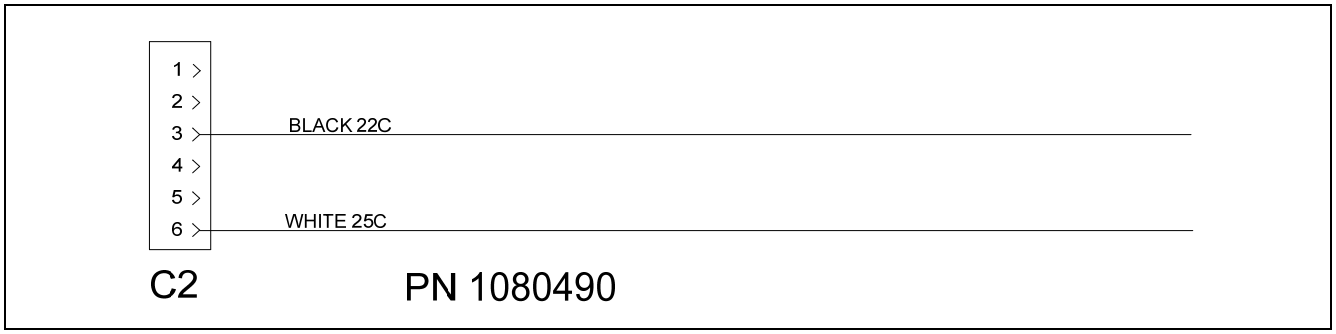

1.4.5.8 Basket Lift Harness

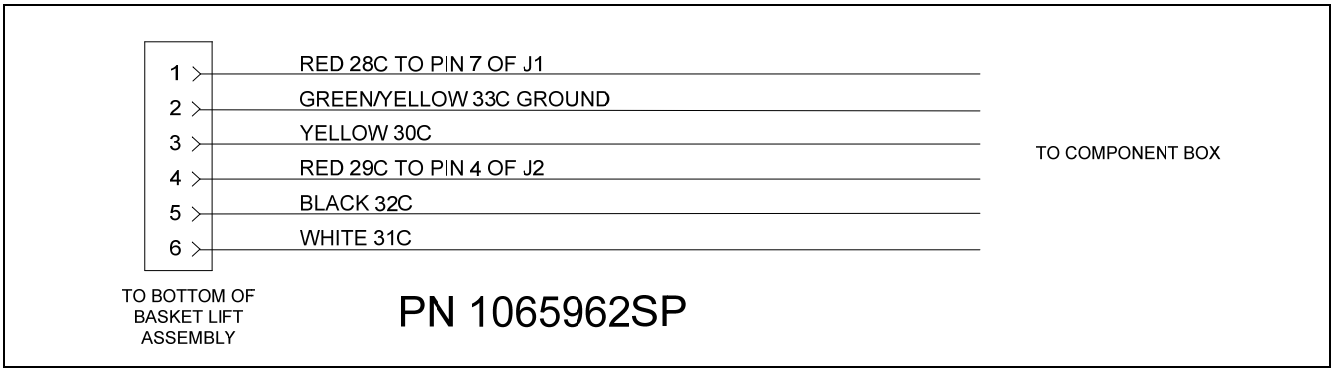

1.4.5.9 Interface Board to Controller Wiring Harness – 15-Pin

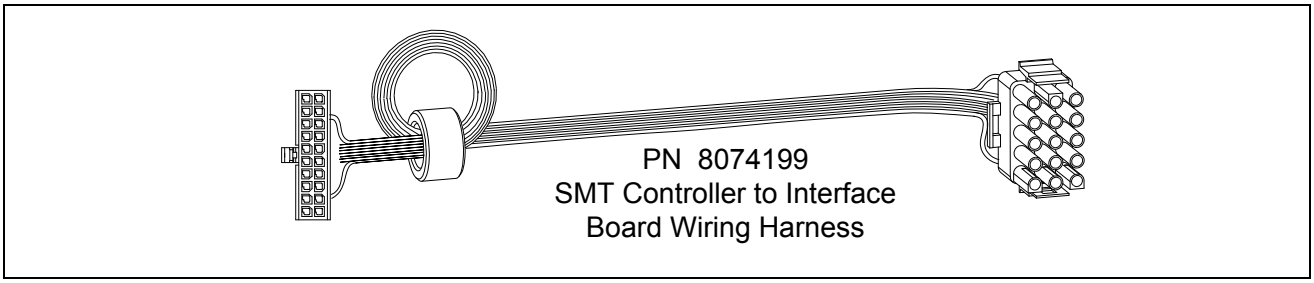

1.4.5.10 FilterQuick™ 3000, MIB, AIF and ATO Wiring

ITEM	PART #	COMPONENT
*	8074546	Computer Communication *(used from Computer to Computer)*
*	8074547	AIF Communication/Power *(used from MIB to AIF and AIF to AIF)*
*	8075787	MIB Power/Pan Sw *(used from Transformer and Fltr Rly to MIB to and Pan Sw) Non-Bulk*
*	8075785	MIB Power/Pan Sw *(used from Transformer and Fltr Rly to MIB to and Pan Sw) Bulk*
*	8074655	FV/DV Harness RTD Medium *(used from RTD to ATO Board)*
*	8262706	FV/DV ATO/RTD Probe Kit
*	8074553	ATO Power *(used from Transformer to ATO Board)*
*	8074771	ATO Power to Second ATO board *(used from Transformer to ATO Board)*
*	1069544	ATO Power to Secondary ATO box (4 and 5 battery only)
*	8074671	ATO Pump and JIB *(used from ATO Board to Top-off Pump and JIB Reset Switch)*
*	8074772	ATO Pump and JIB *(used from ATO Board to Top-off Pump and JIB Reset Switch)* ***4-5 Battery only***
*	8067742SP	Cord set, 120V Fryer and Motor with Ring Terminals
*	1060516	Cord set, 220-250V CE/Export Fryer and Motor with Ring Terminals
*	8074573	Computer Locator Wire *(used from Computer to Interface Board) See wiring diagram 8051734 in FQE30 service manual for locator pin positions.*
*	8074552	Communications Terminator *(used on Computer pin J6 and ATO board pin J10 to terminate network)*
	8074657	Jumper *(used on 4 and 5 battery ATO board plug J5 pin 7 and 8)*
*	1069256SP	Long Top-off Power *(used between Component Box to ATO Box)*
*	8074760	Harness, RTI-MIB connector
√ *	8074660PK	SMT Pin Service Repair Kit
√ *	2302345	SMT Pin Extractor

* Not illustrated.
√ Recommended parts.

NOTE: See wiring diagram on last page of this manual for wiring harness part numbers.

1.5 Filtration System Components

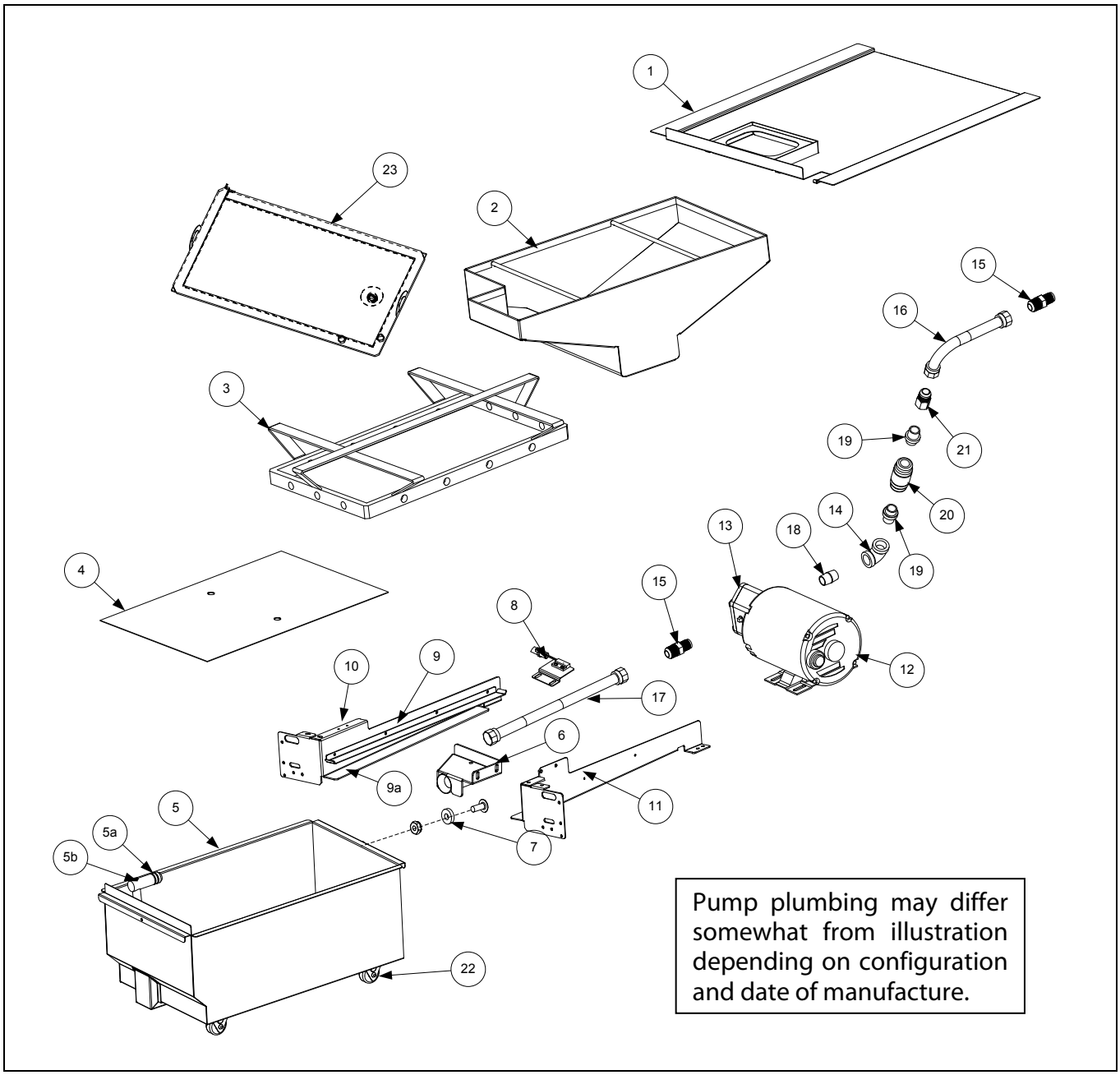

ITEM	PART #	COMPONENT
1	8238810	Lid, Filter Pan
2	8238626	Crumb Tray **(Use 8239381 for use with Filter Leaf)**
3	8103289	Hold-Down Ring for Pad 11.20 x 19.10
4	8122025	Sana Grid Filter Screen
5	1085759SP	Pan, Filter with casters
	1086977SP	Pan, Filter with casters (**For use with Filter Leaf only**)
√ 5a	8261392	O-Ring (Pkg. of 5; used with Item 5; two required)
5b	8130568	Plug, ⅛" Socket Head Pipe (used with Item 5)
6	8236399	Suction Tube
7	8103007	Magnet, Pull Ring

* Not illustrated.
√ Recommended parts

1.5 Filtration System Components cont.

ITEM	PART #	COMPONENT
8	1068080SP	Assembly, Filter Pan Switch (2- Battery)
	1069251SP	Assembly, Filter Pan Switch (3-5 - Battery)
√ *	1065876SP	Sensor, Magnet
9	2306616	Rail, Upper
9a	2306619	Rail, Lower
10	2203275	Support, Left Filter Pan
11	1068487	Support, Right Filter Pan
√ 12		Motor and Gasket Kit
	8261785	100V 50/60 Hz
	8261712	115V 50/60 Hz
	8261756	208V 50/60 Hz
	8261270	220-240V 50/60 Hz
	8261755	250V 50/60 Hz
√ 13	8263192	Pump and Gasket Kit, 8 GPM
	8160093	Gasket, Pump/Motor
*	8091062	Cap Screw, 5/16"-18 4.00" NC Hex *(Connects pump to motor)(use 8090194 washer)*
14	8130062	Elbow, ½" 90° BM
15	8101668	Adapter, ⅝" to ½" NPT Male
16	8101067	Flexline, 8.5-inch Oil Return (to oil return manifold)
17	8101057	Flexline, 13-inch Oil Return (to filter suction tube)
18	8130087	Nipple, ½" x 1.50-inch NPT BM
19	8103738	Adapter, Check Valve Close
20	8100667	Check Valve ½" NPT 1 PSI
21	8101669	Adapter, Female ⅝" OD x ½"
22	8104137	Caster, 2.00-inch
*	8071105	Heater Strip Assembly, 100-120V 25W 18"
*	8071098	Heater Strip Assembly, 208-250V 25W 18"
23	8104492	Leaf Assy, Filter (**Only for use with Filter Pan 108-6977SP**)

* Not illustrated. √ Recommended parts.

1.6 Filtration Electronic Components

1.6.1 Manual Interface Board (MIB) Assembly

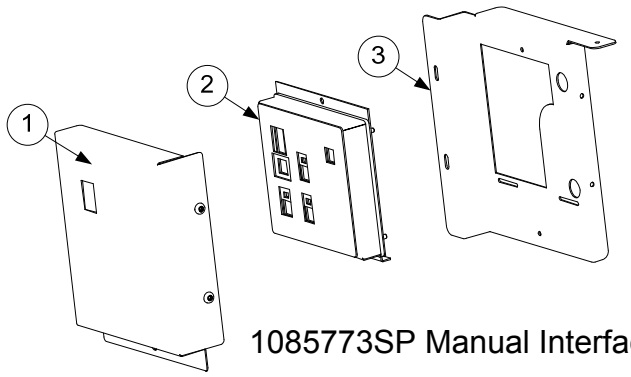

1085773SP Manual Interface Board Assembly

ITEM	PART #	COMPONENT
	1085773SP	Assembly, MIB
1	2400778	Cover, MIB (use 8091021 Torx screw)
√ 2	1085772	Assembly, MIB w/ Frame
	8074481	Overlay
3	2400777	Assembly Back, Box MIB

√ Recommended parts.

1.6.2 Automatic Intermittent Filtration (AIF) Board Assembly

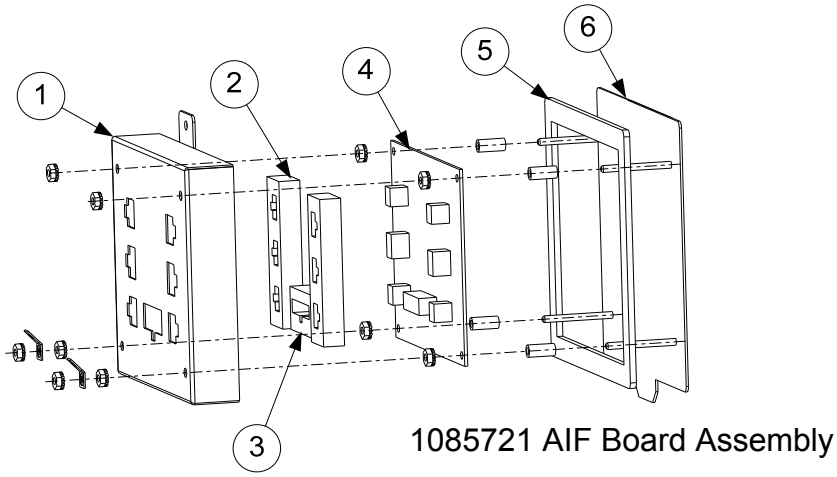

ITEM	PART #	COMPONENT
	1085721	Assembly, AIF
1	8241991	Cover, AIF Board
2	8160814	Gasket, AIF Board
3	8160815	Gasket, Computer Board
√ 4	1085720	Board, AIF
5	8160820	Seal, AIF Board
6	1080097	Panel Assembly, AIF Box

√ Recommended parts.

1.6.3 FilterQuick™ PCB/Controller Board Matrix

PART #	COMPONENT
1085772	Assembly, MIB PCB w/ metal work
1085721	Assembly, AIF Board w/ metal frame
1085720	Board, AIF Board PCB w/ software
1085717	Board, ATO PCB w/ software
1085780	FQ3000 Controller

1.6.4 Control Panel Frames and Push-Pull Rod Assembly

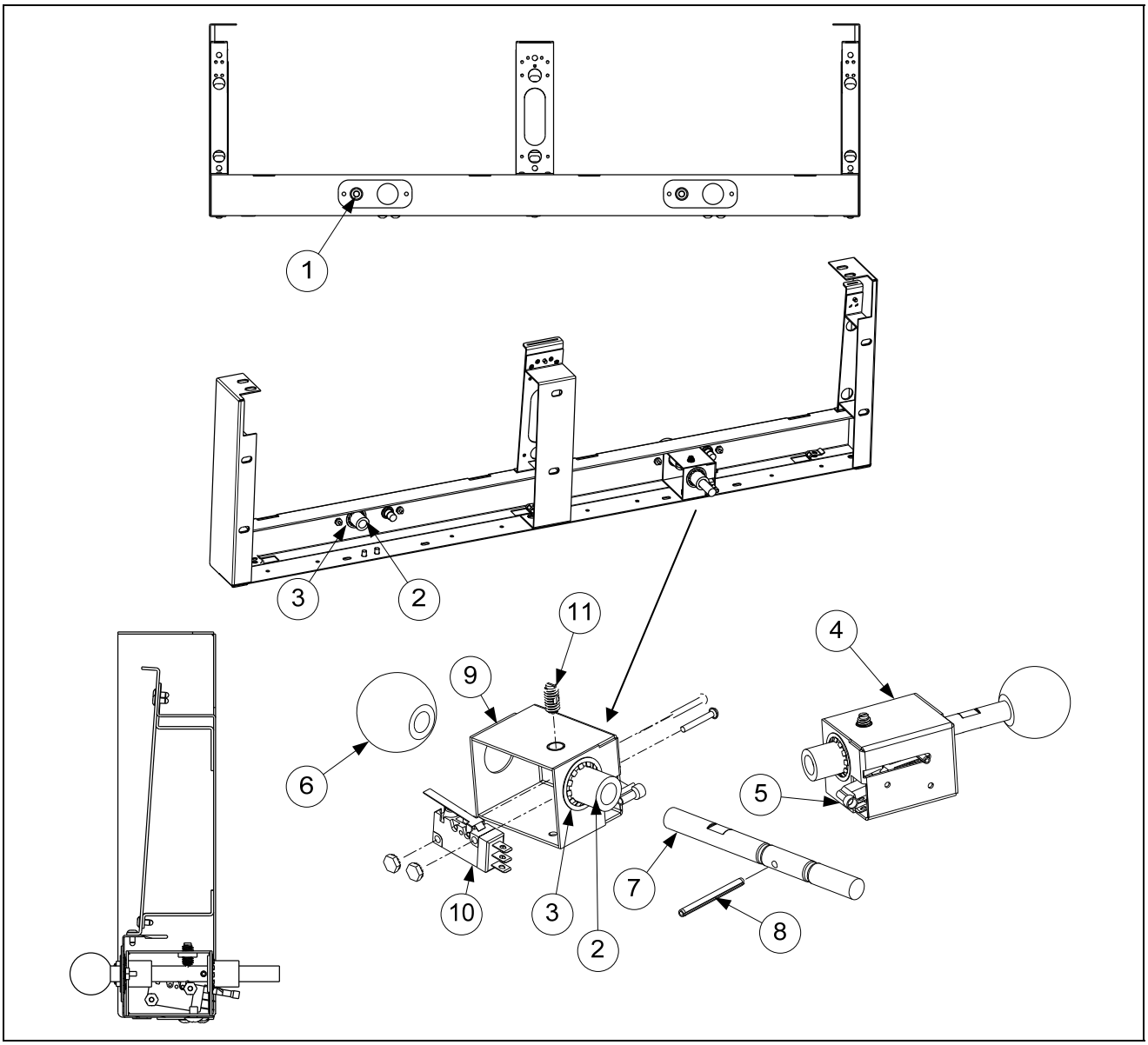

ITEM	PART #	COMPONENT
1	1085672	Harness, FilterQuick Drain with LED
2	8104345	Bushing, ⅜" Shaft Flanged Sleeve Bronze
3	8091107	Ring, ⅝" External Slef Locking Retaining
4	1085731	Assembly, Rod Push Pull
5	8071942	Terminal, Flag
6	8104399	Knob, 1.375" Ball
7	8104360	Rod, Push Pull
8	8104362	Pin, ⅛" x 1.50 SS Slotted Spring
9	8238864	Support, Rod Push Pull
10	8074936	Microswitch, Gold Plated
*	2600635	Bezel Two Position (Used for 2, 4 and 5 battery) **Used with the knob**
*	2600684	Bezel Three Position (Used for 3 and 5 battery) **Used with the knob**
11	8104397	Plunger, ¼-20 SS Ball Nose Spring

* Not illustrated.

1.6.5 Control Panel Frames and Push Button Assembly

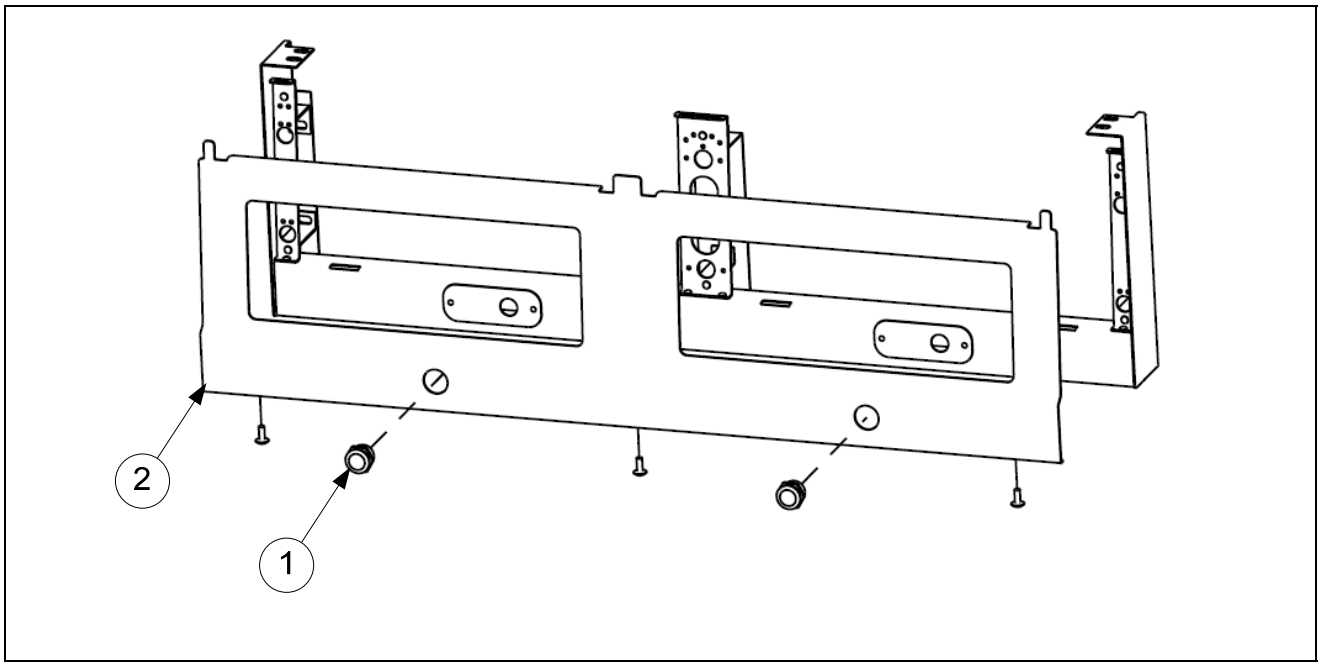

ITEM	PART #	COMPONENT
1	8075858	Switch, Push Button LED Blue Ring Light
2	2601264	Bezel, Fascia 2 position (2/4/5 Battery) with Button (shown)
	2601265	Bezel, Fascia 3 positon (3/5 Battery) with Button (not shown)
*	8263280	Kit, FQ 2- Battery Conversion from Handles to Push Button
*	8263281	Kit, FQ 3- Battery Conversion from Handles to Push Button
*	8263282	Kit, FQ 4- Battery Conversion from Handles to Push Button
*	8263284	Kit, FQ 5- Battery Conversion from Handles to Push Button

* Not illustrated.

1.7 Frypot Assemblies and Associated Parts

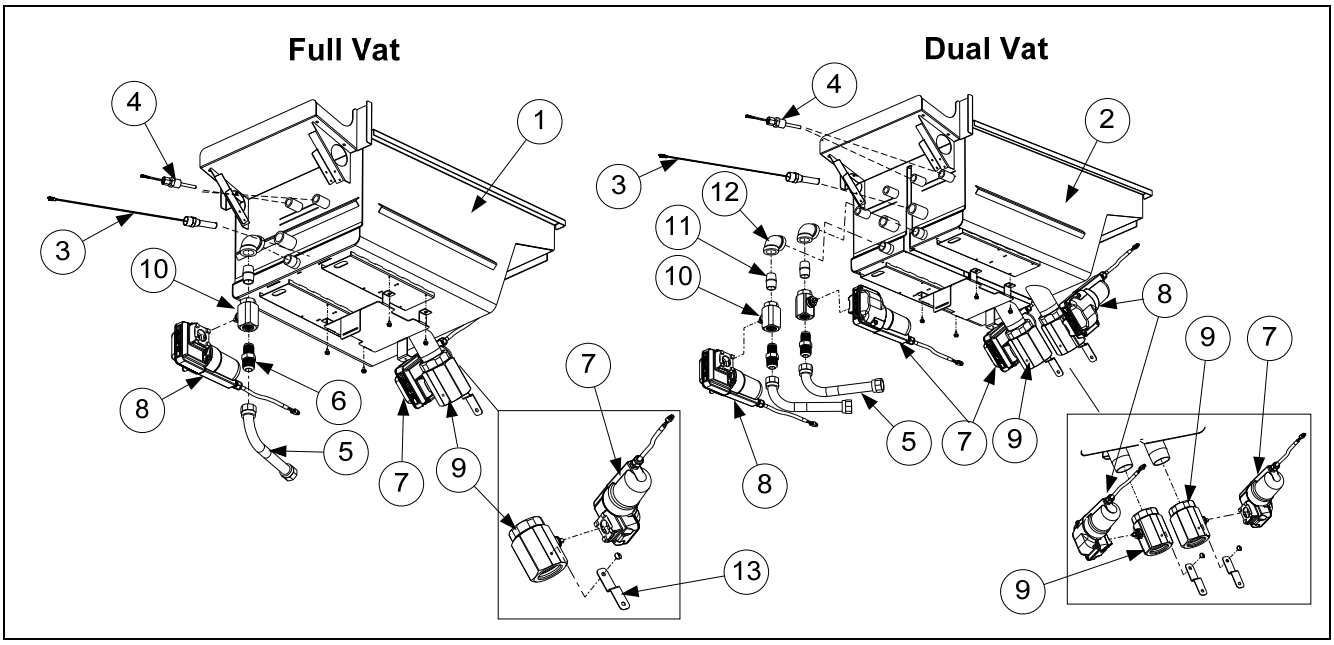

ITEM	PART #	COMPONENT
1	8238947	Frypot, Full-Vat
2	8238952	Frypot, Dual-Vat
√ 3		Thermostat Assembly, High-Limit Long Standard
	8262454	Non-CE Full Vat 425°F (218°C) (17kW FV and 14kW FV) (Color Coded Black 8067543)
	8262456	Non-CE Dual Vat 435°F (224°C) (22kW, 17kW DV and 14 kW DV) (Color Coded Red 8068035)
	8262455	CE Full and Dual Vat 415°F (213°C) (14kW and 17kW CE) (Color-Coded Yellow 8068132)
√ 4	8262706	Probe, Kit AIF/ATO RTD
5	8101067	Flexline, ⅝" OD x 8.50" Long
6	8101668	Adaptor, Male ⅝" OD x ½"
√ 7	8074961	Actuator, Rotary 24VDC (#1) Blue
√ 8	8074962	Actuator, Rotary 24VDC (#2) Black
√ 9	8104353	Valve, 1¼" Drain Rotary Actuator
√ 10	8103754	Valve, ½" NPT Return Rotary Actuator
11	8130022	Nipple, ½" x Close NPT BM
12	8130062	Elbow, ½" Blk 90°
*	8130087	Nipple, ½" x 1.50" NPT BM
13	2207386	Strap, Round Drain Elec

√ Recommended parts.
* Not illustrated.

1.8 Oil Return Manifolds

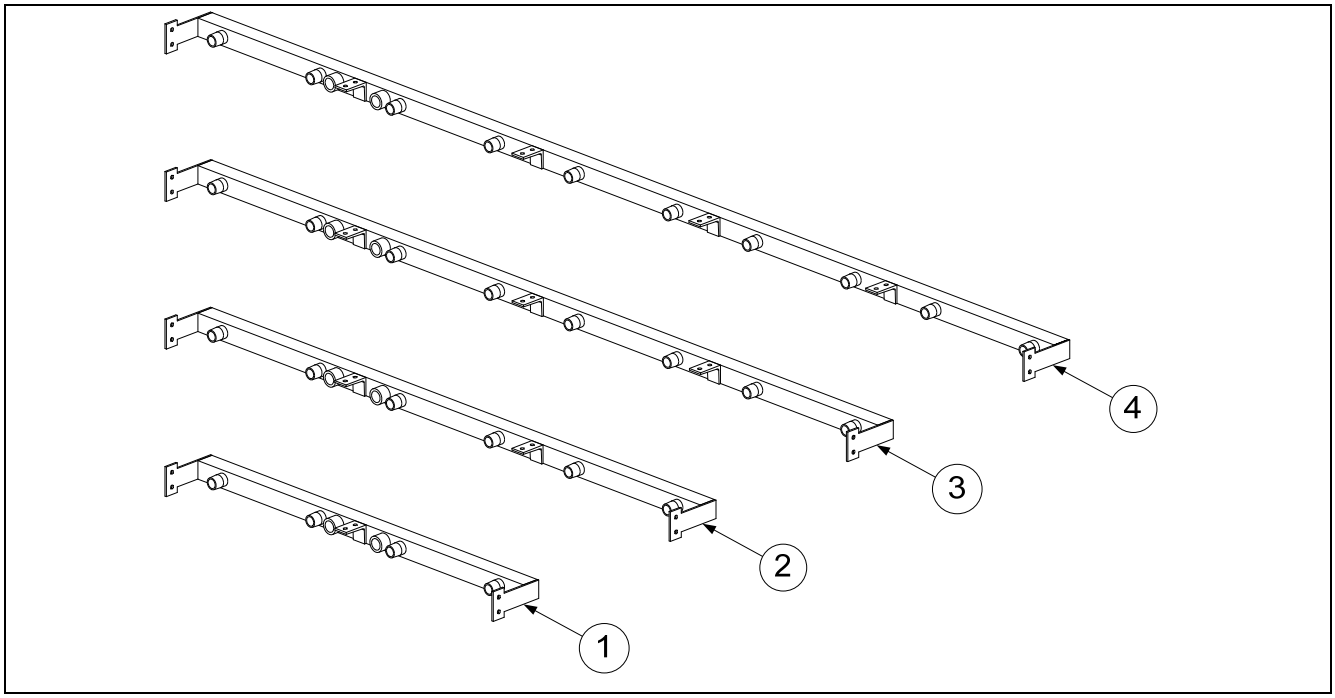

ITEM	PART #	COMPONENT
1	8103015	Manifold, Two-Station Fryer
2	8103016	Manifold, Three-Station Fryer
3	8103017	Manifold, Four-Station Fryer
4	8103018	Manifold, Five-Station Fryer
*	8130907	Cap, 15/16-inch Valve

* Not illustrated.

1.9 Return Valve (Rotary Actuator)

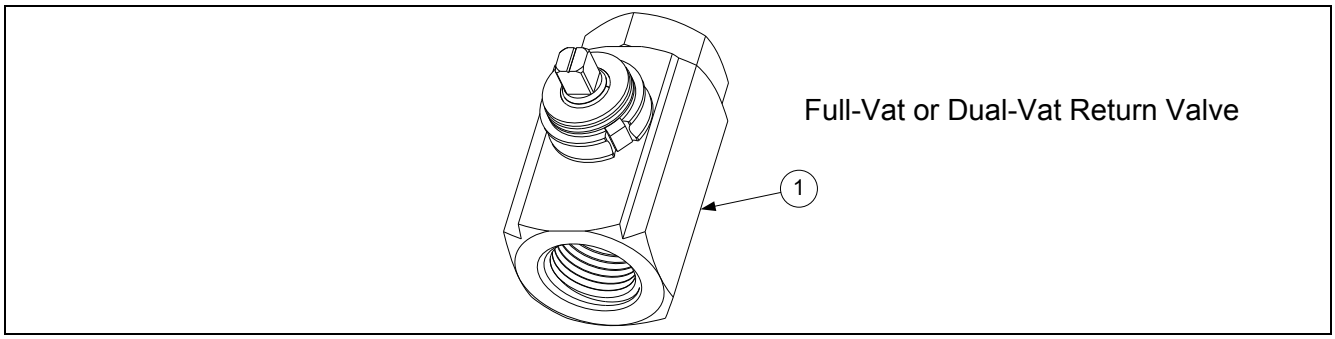

ITEM	PART #	COMPONENT
1	8103754	Valve, ½-inch NPT Rotary Actuator

1.10 Auto Top Off Components

1.10.1 JIB Cradle, JIB Box, JIB Cap/Pick-Up Assembly and ATO Board Assemblies

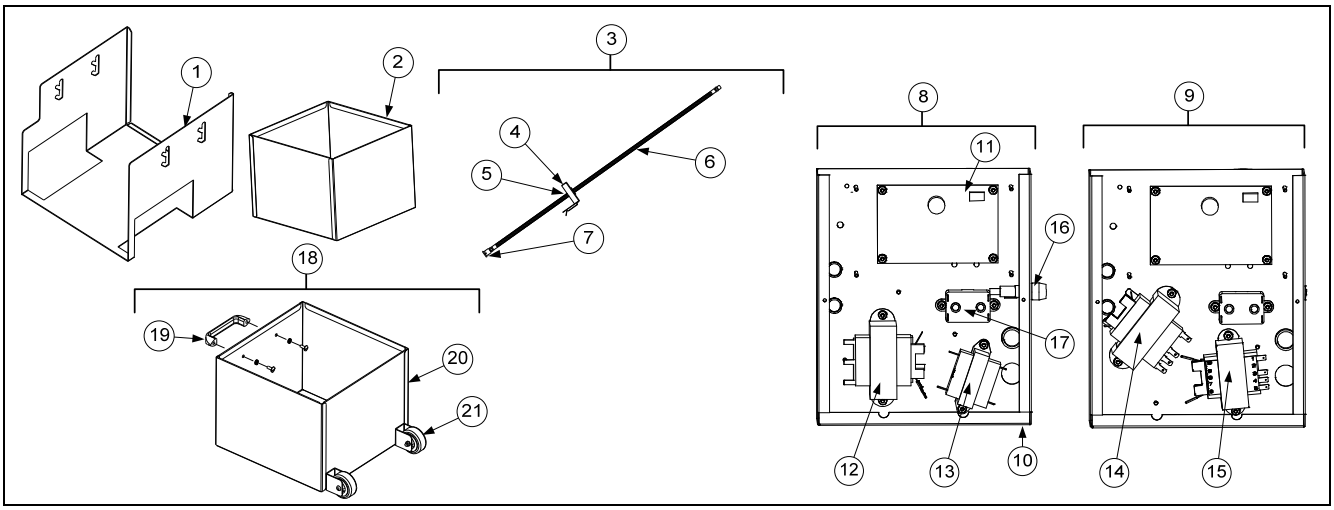

ITEM	PART #	COMPONENT
1	2600197	Cradle, JIB, Stainless Steel
*	8090402	Screw, Thumb ¼-20 x ½"
2	8242298	Box, JIB
3	1081049SP	Cap, JIB Assembly (use 1069495SP for Intl BIB) (use 1083977 BK)
4	8237575	Cap, JIB (use 8236812 for Intl. BIB) (use 8238422 for BK)
5	8160870	Clamp
6	8103663	Hose, JIB
7	8103300	Tip Assembly, JIB Suction Hose
8	1085719	Box, Top off Assembly FilterQuick 120V
9	1085764	Box, Top off Assembly FilterQuick 208-240V
10	1085718	Box, Auto Top Off Board (use 2205679 for ATO Box Cover)
√ 11	1085717	PCB Board, Automatic Top Off
√ 12	8072181	Transformer, 100-120V/24V 62VA
√ 13	8070855	Transformer, 120V 50/60-12V 20VA
√ 14	8072180	Transformer, 208-240V/24V 50VA
√ 15	8072191	Transformer, 208/230/240 -12V 30VA
16	8071321	Holder, Fuse AGC Panel Mount ¼"
√ *	8071597	Fuse, 3A Slow-Blow
√ 17	8070012	Relay, 18AMP 1/3 HP 24V Coil (Top off pump)
18	1086895	Box Assembly, JIB w/ Handle
19	8100180	Handle
20	8239145	Box, W/A JIB w/ handle
21	8122337	Caster, 2"

* Not illustrated.
√ Recommended parts.

NOTE: Top off boxes for vats 4 and 5 have either item 12 or item 14, both have item 11.

1.10.2 ATO Liquid Shortening Pump Assembly

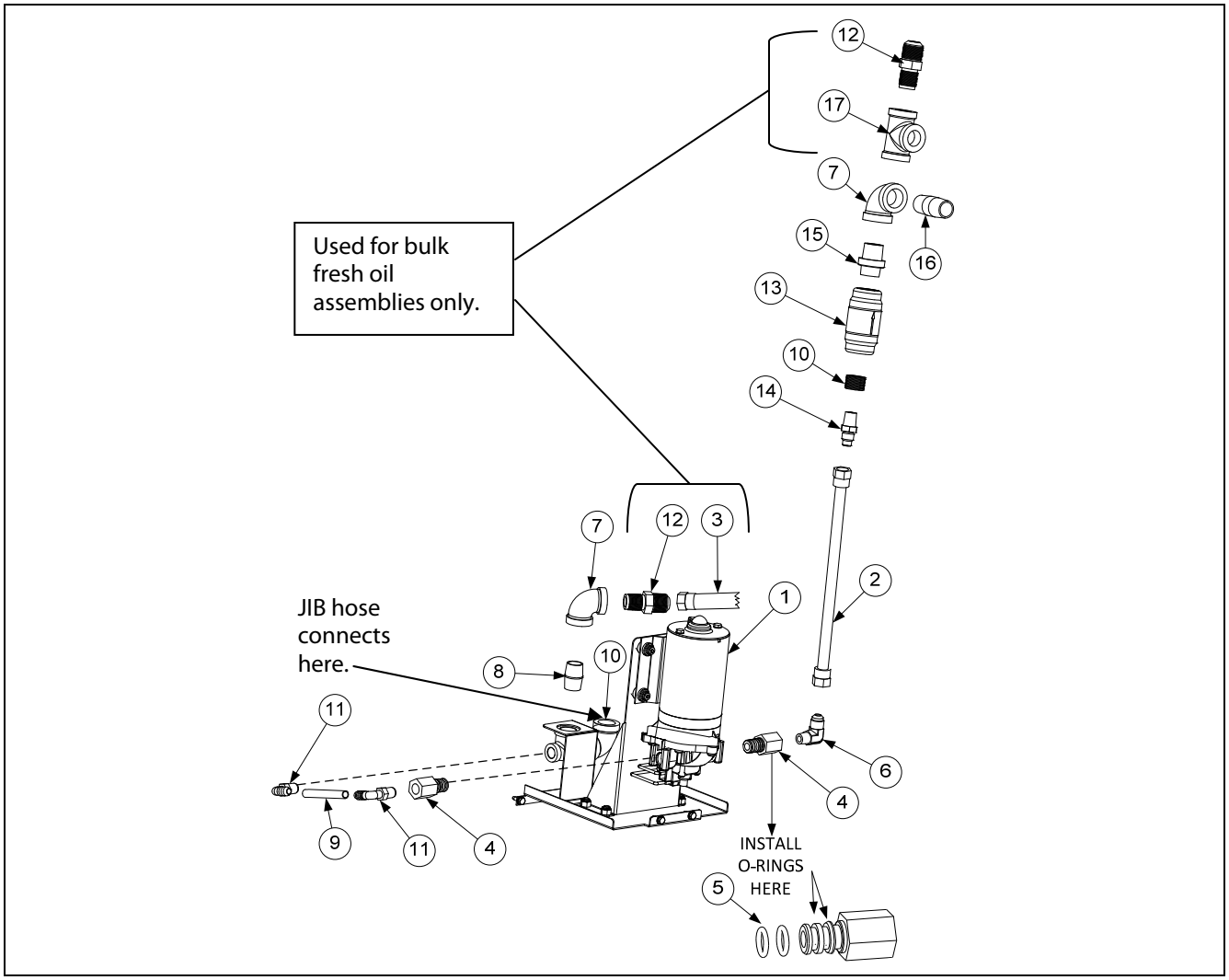

ITEM	PART #	COMPONENT
√ 1	1080639	Pump, Shurflo 24VAC
2	8104466	Flexline, ½" OD x 14-inch
3	8101069	Flexline, ⅝" OD x 29.5-inch (In from bulk fresh oil solenoid)
4	8103666	Fitting, Shurflow Pump
5	8160782	O-Ring, Viton #111
6	8130940	Elbow, ¼" NPT x ⅜" Flare
7	8130062	Elbow, ½" BLK 90° NPT BM
*	8130463	Plug, ½" NPT
8	8130022	Nipple, ½" x Close NPY BM
9	8111166	Hose, Silicone Braided 18" (sold by the foot)
10	8130304	Bushing, ½" x ¼" BM Flush (To / from JIB/BIB oil reservoir)
11	8160710	Fitting, ¼" NPT x ½" Male Barb
12	8101668	Adaptor, Male ⅝" OD x ½"
13	8100667	Check valve, ½ NPT 1 PSI
14	8103270	Fitting, ⅜" Flare x ¼" NPT
15	8103738	Adaptor, Check Valve Close Nipple
16	8130298	Nipple, ½" x 2-inch NPT (Out to oil return manifold)
17	8130003	Tee, ½" x ½" x ½" BM

* Not illustrated.
√ Recommended parts.

1.10.3 ATO Solid Shortening Pump Assembly

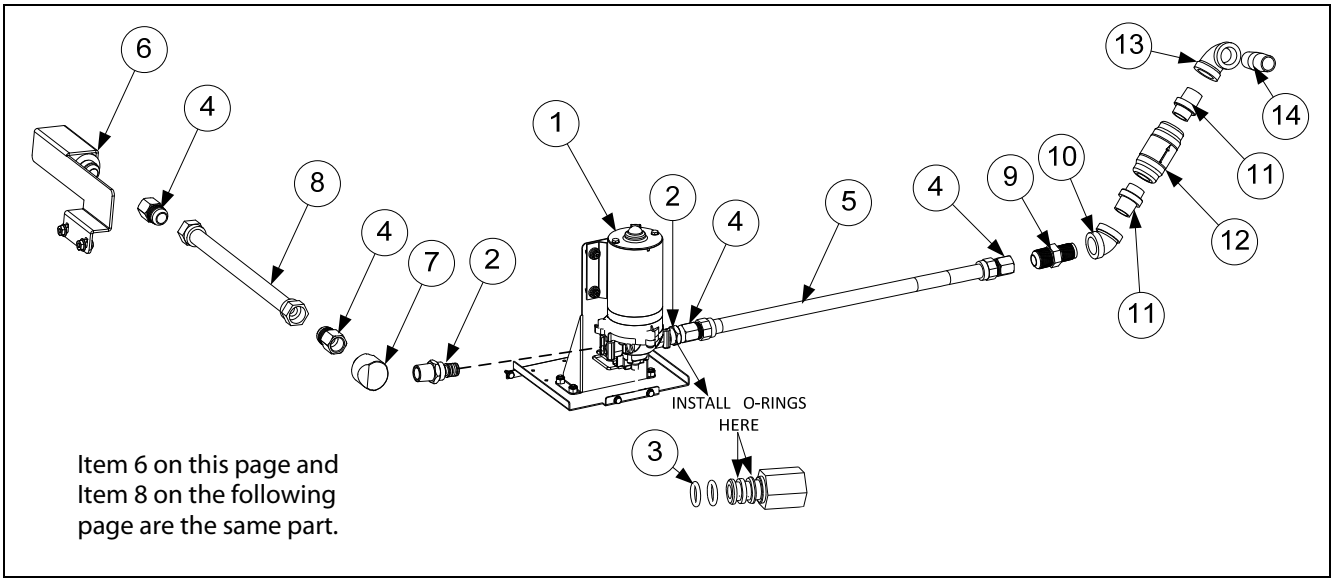

ITEM	PART #	COMPONENT
√ 1	1080639	Pump, Shurflo 24VAC
2	8103820	Fitting, Quick Connect Shurflo
3	8160782	O-Ring, Viton #111
4	8101669	Adaptor, Female ⅞" OD x ½"
5	8101369	Flexline, ⅝" OD x 17.50-inch
6	8238079	Bracket, W/A Shortening Suction (In from Shortening Melting Unit)
7	8130908	Adapter, ½" NPT 90°
8	8101055	Flexline, ⅝" OD x 11.5-inch
9	8101668	Adaptor, Male ⅝" OD x ½"
10	8130345	Elbow, ½ Blk 45°
11	8103738	Adaptor, Check Valve Close Nipple
12	8100667	Check valve, ½ NPT 1 PSI
13	8130062	Elbow, ½" BLK 90° NPT BM
14	8130298	Nipple, ½" x 2-inch NPT (Out to oil return manifold)

√ Recommended parts.

1.10.4 Shortening Melting Unit

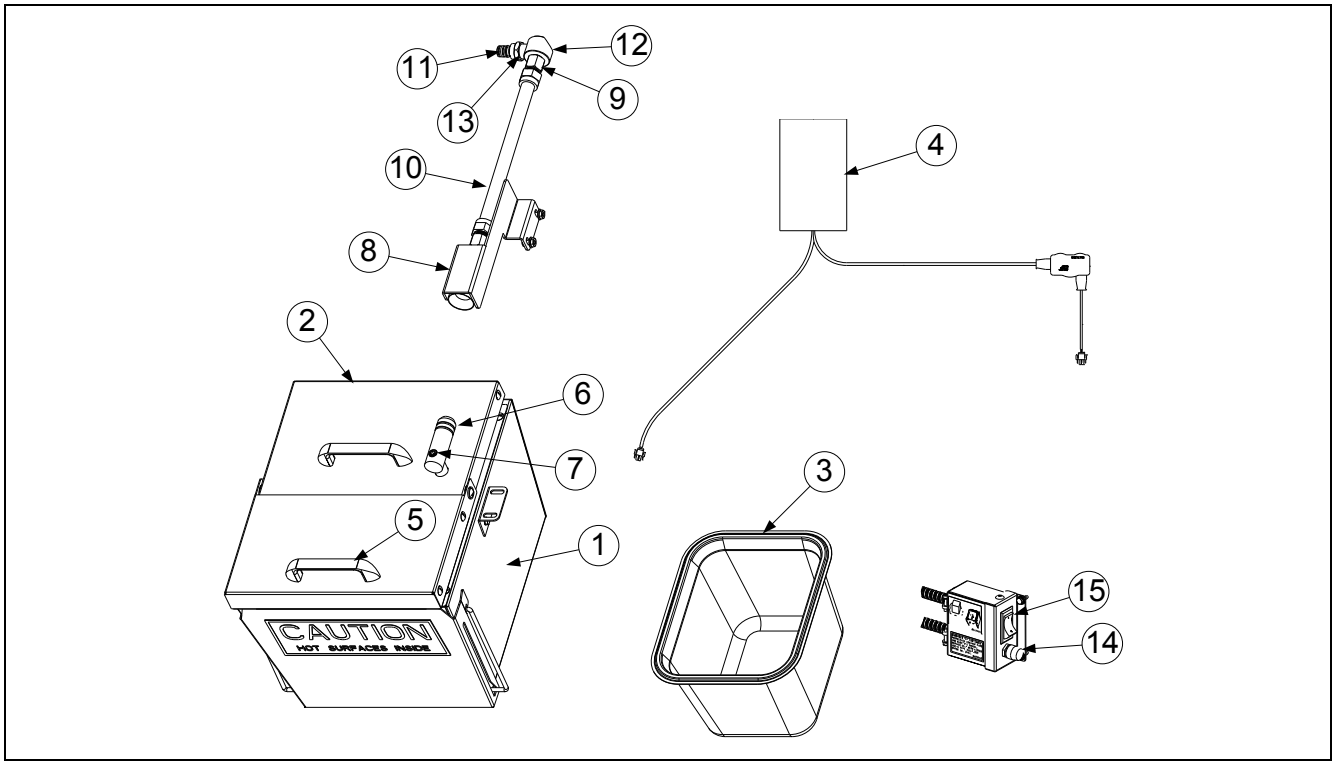

ITEM	PART #	COMPONENT
	1084497SP	Assy, Heated Shortening 120V (use 1084493 240V) (use 1085585 100V)
1	1084496	Box Assy, Heated Shortening 120V(use 1084492 240V)(use 1085584 100V)
2	1083774	Assembly, Solid Shortening Lid
3	8103957	Pan, Heated Shortening
4	8075321	Strips, Hot Box Heater with controller 120V
	8075268	Strips, Hot Box Heater with controller 240V
	8075732	Strips, Hot Box Heater with controller 100V
5	8100180	Handle
√ 6	8261392	O-Ring (Pkg. of 5)
7	8130568	Plug, ⅛" Socket Head Pipe
8	8238079	Bracket W/A, Shortening Suction 3 battery
	8238147	Bracket W/A, Shortening Suction 4 battery
9	8101669	Adaptor, Female ⅞" OD x ½"
10	8101055	Flexline, ⅝" OD x 11.5-inch
11	8160782	O-Ring, Viton #111
12	8130908	Adapter, ½" NPT 90°
13	1082054	Fitting, Shurflo Pump with male end (includes O-rings)
14	8071321	Holder, Fuse
√ *	8071555	Fuse 5 Amp 240V
√ *	8072799	Fuse 10 Amp 120V
15	8074036	Switch
*	8071105	Heater Strip Assembly, 120V, 25W 18"
*	8071420	Heater Strip Assembly, 120V, 25W 36"
*	8071472	Heater Strip Assembly, 120V, 40W 56"
*	8071098	Heater Strip Assembly, 240V, 25W 18"
*	8071419	Heater Strip Assembly, 240V, 45W 36"
*	8071473	Heater Strip Assembly, 240V, 70W 56"
*	8071915	Heater Strip Assembly, 100V, 25W 18"
*	8071917	Heater Strip Assembly, 100V, 40W 56"

* Not illustrated.
√ Recommended parts.

1.11 Bulk Oil Components

1.11.1 Bulk Manifold and Accessories

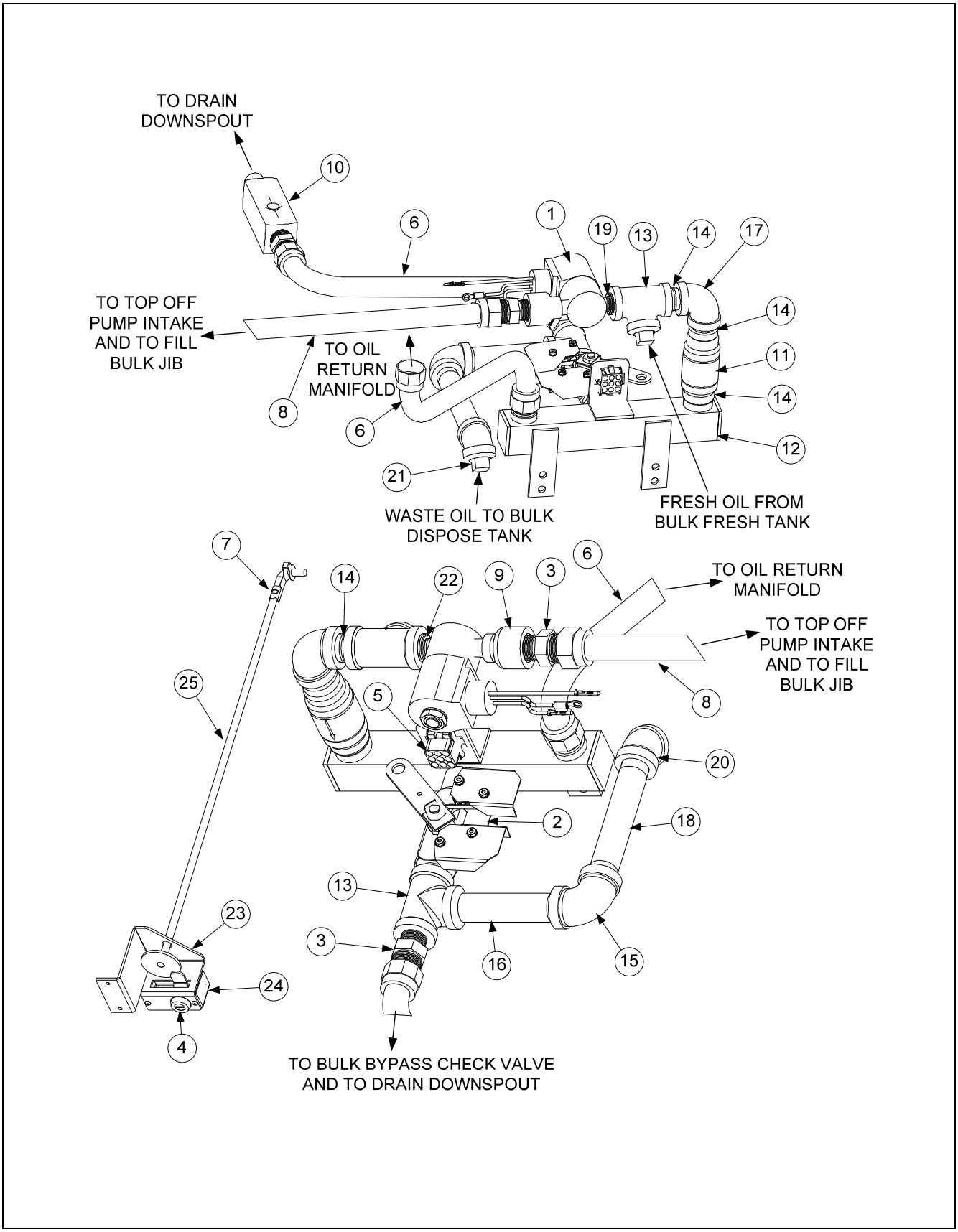

1.11.1 Bulk Manifold and Accessories cont.

ITEM	PART #	COMPONENT
√ 1	1066830	Solenoid Assembly
2	1080446	Valve, RTI Waste Assembly (see page 1-27 for parts)
3	8101668	Adaptor, Male ⅝" OD x ½"
4	8103587	Lock and Key, RTI Waste Handle
5	8075786	Harness, Bulk Oil
6	8101057	Flexline, ⅝" OD x 13-inch long
7	8090601	Clip, Clevis Left Rod End
8	8101069	Flexline, ⅝" OD x 29.50-inch long (used for 3, 4, and 5 battery)
	8101067	Flexline, ⅝" OD x 8.50-inch long (used for 2-battery)
9	8130555	Reducer, Bell Fitting, ½" to ¼" NPT BM
10	8103531	Valve, Check 20 PSI RTI bypass
11	8103583	Valve, Check ½" NPT 4 PSI RTI Manifold
12	8103596	Manifold, RTI
13	8130003	Tee, ½" x ½" x ½" BM
14	8103738	Adaptor, Check Valve Close Nipple
15	8130062	Elbow, ½" Blk 90°
16	8130093	Nipple, ½" x 4-inch
17	8130062	Elbow, ½" BM 90°
18	8130261	Nipple, ½" x 5-inch NPT
19	8130304	Bushing, ½" x ¼"
20	8130345	Elbow, ½ Blk 45°
21	8130629	Plug, ½" NPT Square Head
22	8130838	Nipple, ¼" NPT
23	2205656	Brace, RTI Handle
24	2205657	Cover, RTI Handle
25	8237142	Handle, RTI Waste Pull

√ Recommended parts.

1.11.2 Bulk Dispose Waste Valve

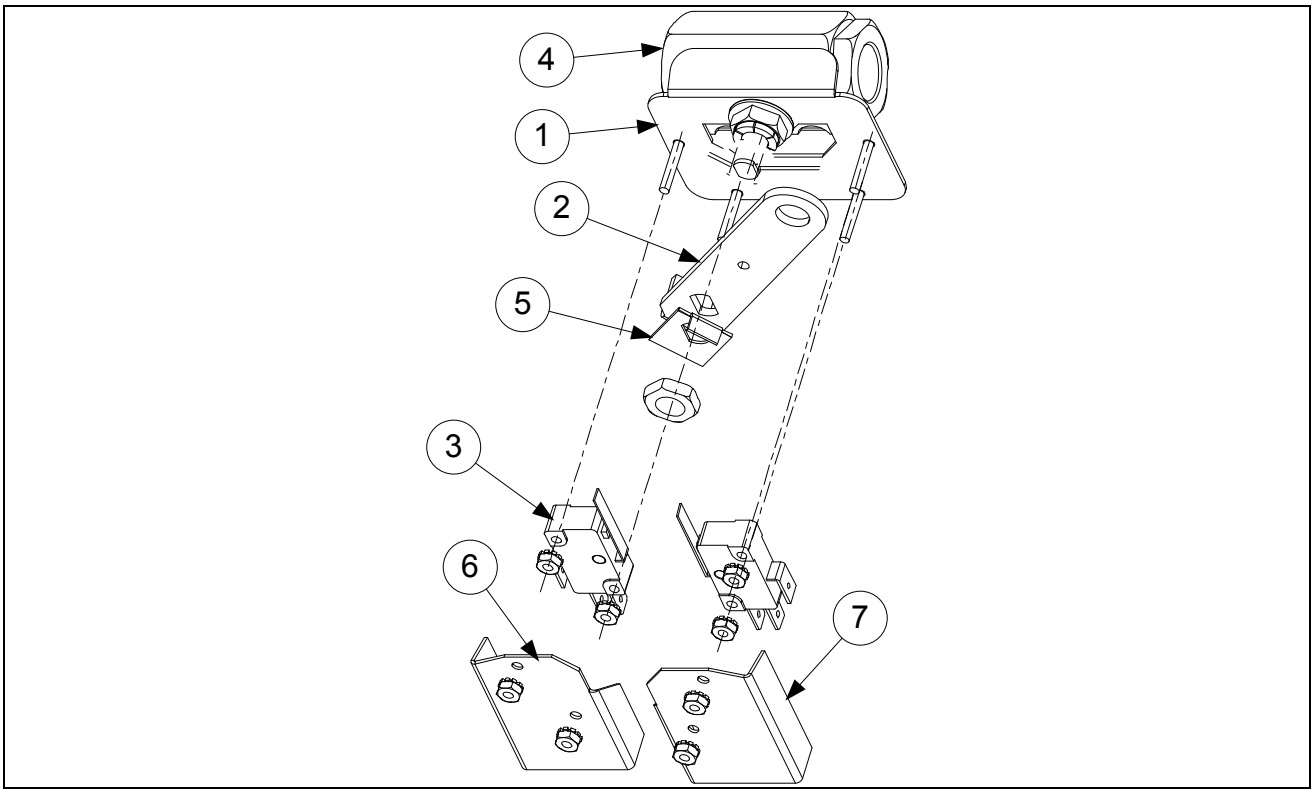

ITEM	PART #	COMPONENT
	1080446	Valve, RTI Dispose Waste
1	1080445	Bracket, RTI Waste Valve
2	2205615	Handle, RTI Waste Valve
3	8074936	Microswitch, Gold Sealed
4	8100278	Valve, ½" Ball
5	9002935	Retainer, Nut Return Valve
6	9012348	Cover, DV Safety Switch
7	9022348	Cover, DV Safety Switch

1.11.3 RTI Test Box

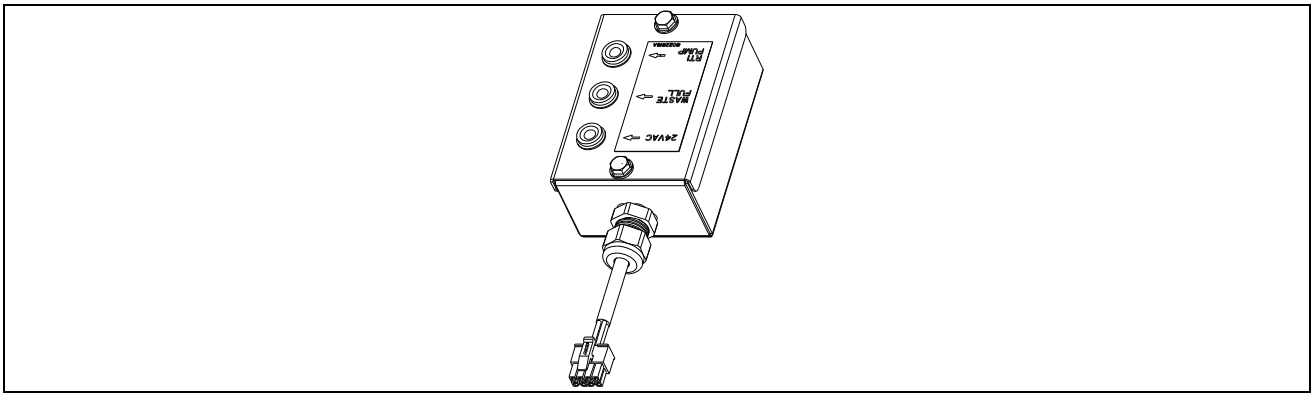

ITEM	PART #	COMPONENT
√	1080716	Box, RTI Test

√ Recommended parts.

1.12 Basket Lift Assembly and Associated Parts

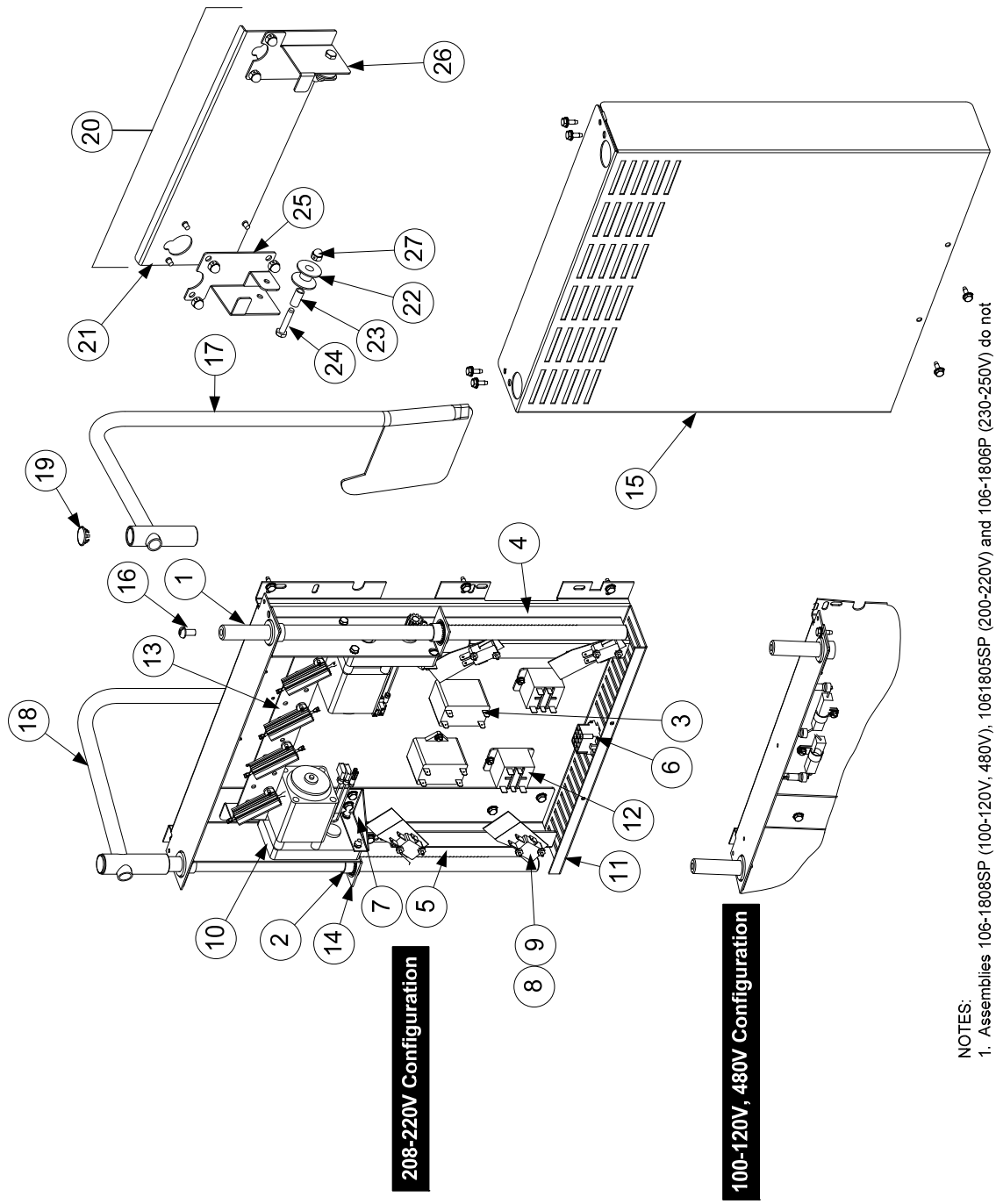

NOTES:

1. Assemblies 106-1808SP (100-120V, 480V), 1061805SP (200-220V) and 106-1806P (230-250V) do not include Items 15-27. These items must be ordered separately.
2. For 100-120V, 480V units, each individual resistor (807-2661) may be replaced or the entire resistor assembly (806-8530SP) may be replaced.
3. For 208-220V units, the entire resistor assembly (106-2770SP) or 230-250V (106-2771SP) must be replaced.
4. Wiring has been omitted for clarity.

1.12 Basket Lift Assembly and Associated Parts cont.

ITEM	PART #	COMPONENT
		Basket Lift Assemblies *(see **Note 1** in illustration)*
	1061808SP	Basket Lift Assy, 100-120/480VAC w/Relay *(Items 1-20) Assembly not shown*
	1061805SP	Basket Lift Assy, 200-220VAC w/Relay *(Items 1-20) Assembly shown*
*	1061806SP	Basket Lift Assy, 230-250VAC w/Relay *(Items 1-20) Assembly not shown*
1	8101012	Rod, Basket Lift
2	8130035	Bushing, Bronze
3	8072513	Capacitor, 12.5 µFd 330VAC
4	9018499	Chassis, Left Basket Lift
5	9028499	Chassis, Right Basket Lift
6	8070159	Connector, 12-Pin Female
7	9005529	Gusset, Basket Lift Motor
8	8120442	Insulation, Microswitch
9	8072572	Microswitch
10	8065964SP	Motor Assy, 208-240VAC Modular Basket Lift
11	2002942	Mount, Modular Basket Lift
12	8071683	Relay, 12VDC
13		Resistor Assy
	8068530SP	100-120V Modular Basket Lift *(see **Note 2** in illustration)*
	1062770SP	208-220VAC Modular Basket Lift *(see **Note 3** in illustration)*
*	1062771SP	230-250VAC Modular Basket Lift *(see **Note 3** in illustration)*
14	8090082	Ring, Bushing Retainer
15	9104776	Cover, Modular Basket Lift Rear S/S ***(Use 9004776 for Mild Steel)***
16	8090127	Screw, ¼"-20 X ½" Slotted Round Head
17	8237986	Arm, Left Basket Lift
18	8237987	Arm, Right Basket Lift
19	8100179	Button, Plug
20	1082743SP	Roller Assy, Basket Lift
21	1082860	Mount, Basket Lift Roller
22	8100194	Roller, Basket Lift
23	8100374	Spacer, Basket Lift Roller
24	8090508	Bolt, ¼"-20 X 1¼ "
25	8237980	Guide, Basket lift Left
26	8238023	Guide, Basket lift Right
27	8090990	Nut, ¼-20 Cap
*	8241477	Tray, Drip Right
*	8241476	Tray, Drip Left
		Wire Assemblies
*	1065962	Harness, RE BL Interface (from Basket Lift Assy to control box)
*	WIR0166	Wire Assy, 100-250VAC Basket Lift

* Not illustrated.

1.13 Oil Quality Sensor (OQS) and Associated Parts

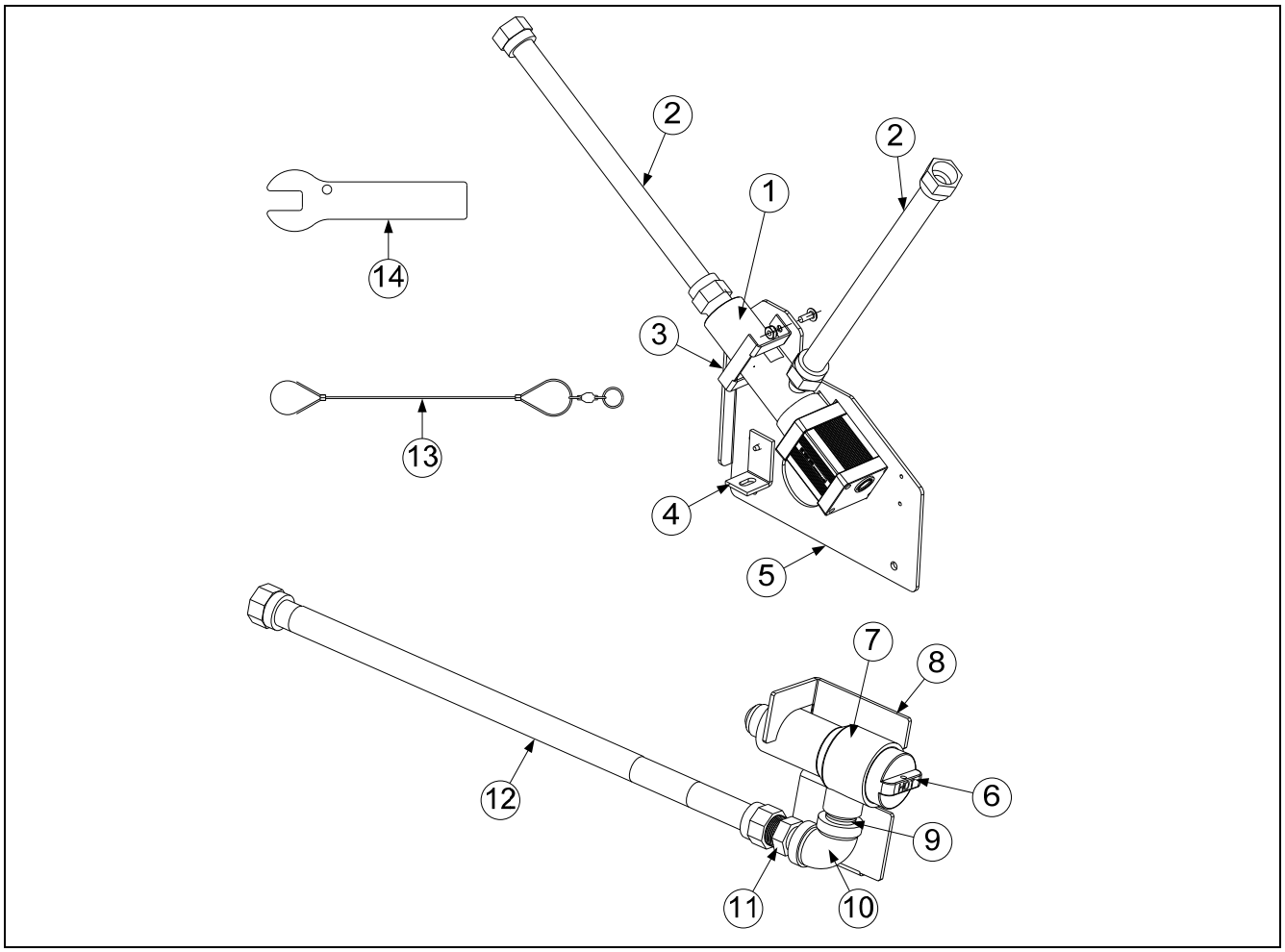

ITEM	PART #	COMPONENT
	8263290	Kit, OQS FilterQuick Elec 2-Battery (Kit to add to existing FilterQuick Elec Fryers)
	8263293	Kit, OQS FilterQuick Elec 3, 4 and 5 Battery (Kit to add to existing FilterQuick Elec Fryers)
1	8263292	Sensor, FilterQuick OQS Replacement
2	8101055	Flexline, ⅝" OD x 11.5-inch
3	2401385	Retainer, OQS Sensor FQ
4	2401386	Brace, OQS Sensor Mount
5	2401384	Mount, OQS Sensor FQ
6	8238335	Screen, Suction Line Filter
7	8238929	Body W/A, Pre-Filter Final EBRO
8	2401094	Plate, Lower Pre-filter EBRO
9	8130022	Nipple, ½" x Close NPT BM
10	8130062	Elbow, ½" 90° BM
11	8101668	Adapter, ⅝" to ½" NPT Male
12	8101369	Flexline, ⅝" OD x 17.50-inch
13	8104167	Lanyard, In-Line Filter
14	2401086	Wrench, Pre-Filter Cap

1.14 Wiring Connectors, Pin Terminals and Power Cords

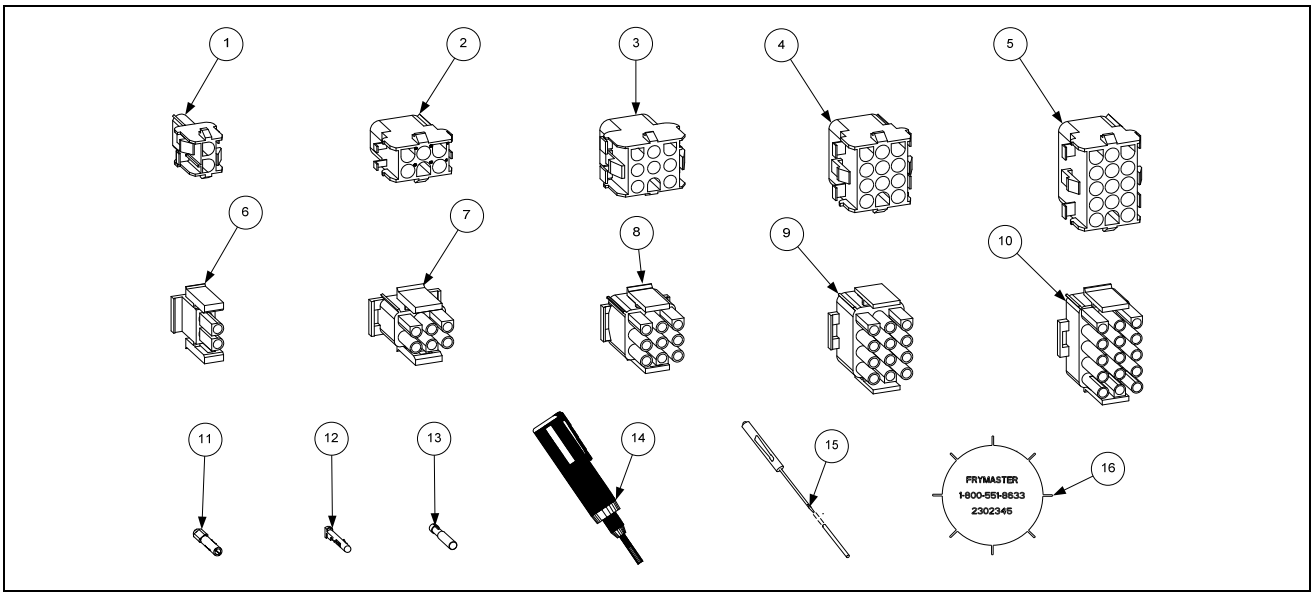

ITEM	PART #	COMPONENT
		Power Cords
		DELTA
*	8073834	Cable, 3 Phase, 4 Wire, 96” 8 Gauge, Plug- None
*	8074669	Cable, 3 Phase, 4 Wire, 96” 6 Gauge, Plug- None
*	8074668	Cordset, 3 Phase, 4 Wire, 96” 6 Gauge, Plug- Arrow Hart 8462N
*	8073817	Cordset, 3 Phase, 4 Wire, 96” 6 Gauge, Plug- Arrow Hart 8462N, Hubbell HBL-8461C
*	8075625	Cordset, 3 Phase, 4 Wire, 113” 4 Gauge, Plug- Hubbell HBL-8462C
*	8075854	Cord, 3 Phase, 4 Wire, 113” 4 Gauge, Plug- None
		WYE
*	8073836	Cordset, FPP European Power, 5 Wire, 92”, 10 Gauge, Plug- Hubbell C532P6S
*	8073835	Cable, Export, 5 Wire, 92”, 10 Gauge, Plug- None
*	8073838	Cable, Export, 5 Wire, 147”, 10 Gauge, Plug- None
*	8074979	Cordset, FPP European Power, 5 Wire, 92”, 10 Gauge, Plug- Mennekes 532P6-14
*	8074143	Cable, Export, 5 Wire, 118”, 10 Gauge, Plug- None
*	8073976	Cable, Export, 5 Wire, 177”, 10 Gauge, Plug- None
*	8073977	Cable, Export China, 5 Wire, 165”, 10 Gauge, Plug- None
*	8074005	Cable, Export Australia, 5 Wire, 104”, 10 Gauge, Plug- None
		Connectors and Tools
1	8071068	2-Pin Female
2	8070158	6-Pin Female
3	8070156	9-Pin Female
5	8070159	12-Pin Female
5	8070875	15-Pin Female
6	8071067	2-Pin Male
7	8070157	6-Pin Male
8	8070155	9-Pin Male
9	8070160	12-Pin Male
10	8070804	15-Pin Male
11	8261341	Terminal, Female Split Pin (Pkg of 25)
12	8261342	Terminal, Male Split Pin (Pkg of 25)
13	8072518	Plug, Mate-N-Lock (Dummy Pin)
14	8070928	Extract Tool Pin Pusher
15	8064855	Pin Pusher Screwdriver Assembly
16	2302345	SMT Pin Extractor
*	8074660PK	SMT Pin Service Repair Kit

* Not illustrated.

1.15 Fasteners

ITEM	PART #	COMPONENT
*	8090429	Bolt, ¼-inch – 20 x 2.00-inch Hex Head ZP Tap
*	8090131	Bolt, ¼-inch -20 x ¾-inch Hex
*	8091020	Cap Screw, 5/16-inch-18 5.50" NC Hex *(Connects pump to motor.)*
*	8090448	Clip, Tinnerman
*	8261366	Nut, 4-40 Keps Hex (Pkg. of 25) (809-0237)
*	8261358	Nut, 6-32 Keps Hex (Pkg. of 25) (809-0049)
*	8090247	Nut, 8-32 Keps Hex
*	8090893	Nut, 8-32 Crown Acorn
*	8261376	Nut, 10-32 Keps Hex (Pkg. of 10) (809-0256)
*	8090766	Nut, 10-32 Keps Hex SS
*	8090581	Nut, ½ NPT Locking
*	8090020	Nut Cap 10-24 NP
*	8261372	Nut Grip ¼-inch ¼-20 Hex NP (Pkg. of 10) (809-0059)
*	8090417	Nut Flange ¼-inch ¼-20 Serr
*	8090535	Nut, "T" ¼-inch-20 x 7/16 SS
*	8090495	Nut, ¼-inch – 20 Press
*	8090540	Nut, Lock ½-inch-13 Hex 2-Way ZP
*	8261359	Screw, 4-40 x ¾-inch Slotted Round Head (Pkg. of 25) (809-0354)
*	8261365	Screw, 6-32 x ⅜-inch Slot Head (Pkg. of 25) (809-0095)
*	8090357	Screw, 6 x ⅜-inch Phillips Head NP
*	8090359	Screw, 8 x ¼-inch Hex Washer Head
*	8090360	Screw, 8 x ⅜-inch Hex Washer Slot Head
*	8261371	Screw, 8 x ½-inch Hex Head ZP (Pkg. of 25) (809-0361)
*	8090364	Screw, 8 x ⅝-inch Hex Washer Head ZP
*	8090518	Screw, 8-32 x ⅜-inch Hex Washer Slotted Head SS
*	8090104	Screw, 8-32 x ½-inch Slotted Head ZP
*	8261363	Screw, 8-32 x ½-inch NP (Pkg. of 25) (809-0103)
*	8261360	Screw, 10-24 x 5/16-inch Round Slot Head ZP (Pkg. of 25) (809-0024)
*	8261330	Screw, 10-32 x ⅜-inch Slot Head SS (Pkg. of 25) (809-0117)
*	8091003	Screw, 10-32 x ⅜-inch Hex Trim Head SS
*	8090270	Screw, 10-32 x ½-inch Phillips Head ZP
*	8261375	Screw, 10-32 x ¾-inch Hex Trim Head SS (Pkg. of 5) (809-0401)
*	8091000	Screw, 10-32 x 1¼-inch Hex Sck C/S
*	8261374	Screw, 10 x ½-inch Hex Head (Pkg. of 25) (809-0412)
*	8090266	Screw, 10 x ½-inch Phillips Head ZP
*	8090434	Screw, 10 x ⅜-inch Hex Washer Head NP
*	8091021	Screw, 10 x ⅜-inch Torx Pan Type B
*	8090123	Screw, 10 x ¾-inch Slot Head
*	8261389	Screw, 1/4-20 x ¾-inch Hex Head ZP (Pkg. of 10) (809-0131)
*	8090582	Washer ½ NPT Locking
*	8090184	Washer, #10 LK ZP
*	8090190	Washer, .625 X .275 X 40 Flat SS
*	8090191	Washer, Lock ¼ Spring ZP
*	8090193	Washer, Flat ¼ Nylon
*	8090194	Washer, Flat 5/16-inch ZP

1.16 FilterQuick™ Electric Simplified Wiring

1.16.1 FilterQuick™ Electric Simplified Wiring with Push Button

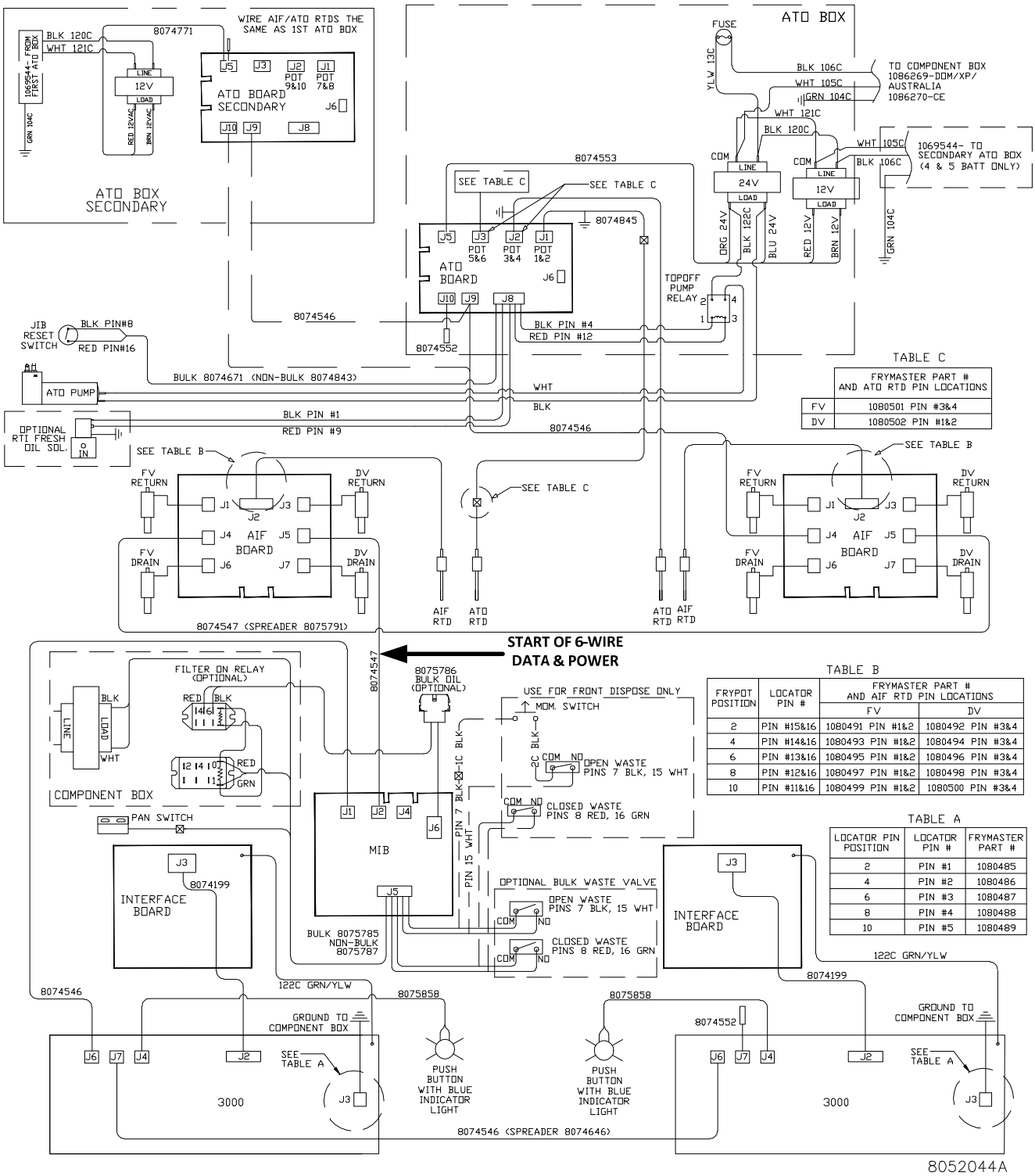

TABLE C

	FRYMASTER PART # AND ATO RTD PIN LOCATIONS
FV	1080501 PIN #3&4
DV	1080502 PIN #1&2

TABLE B

FRYPOT POSITION	LOCATOR PIN #	FRYMASTER PART # AND AIF RTD PIN LOCATIONS	
		FV	DV
2	PIN #15&16	1080491 PIN #1&2	1080492 PIN #3&4
4	PIN #14&16	1080493 PIN #1&2	1080494 PIN #3&4
6	PIN #13&16	1080495 PIN #1&2	1080496 PIN #3&4
8	PIN #12&16	1080497 PIN #1&2	1080498 PIN #3&4
10	PIN #11&16	1080499 PIN #1&2	1080500 PIN #3&4

TABLE A

LOCATOR PIN POSITION	LOCATOR PIN #	FRYMASTER PART #
2	PIN #1	1080485
4	PIN #2	1080486
6	PIN #3	1080487
8	PIN #4	1080488
10	PIN #5	1080489

1.16.2 FilterQuick™ Electric Simplified Wiring with Push Pull Handles

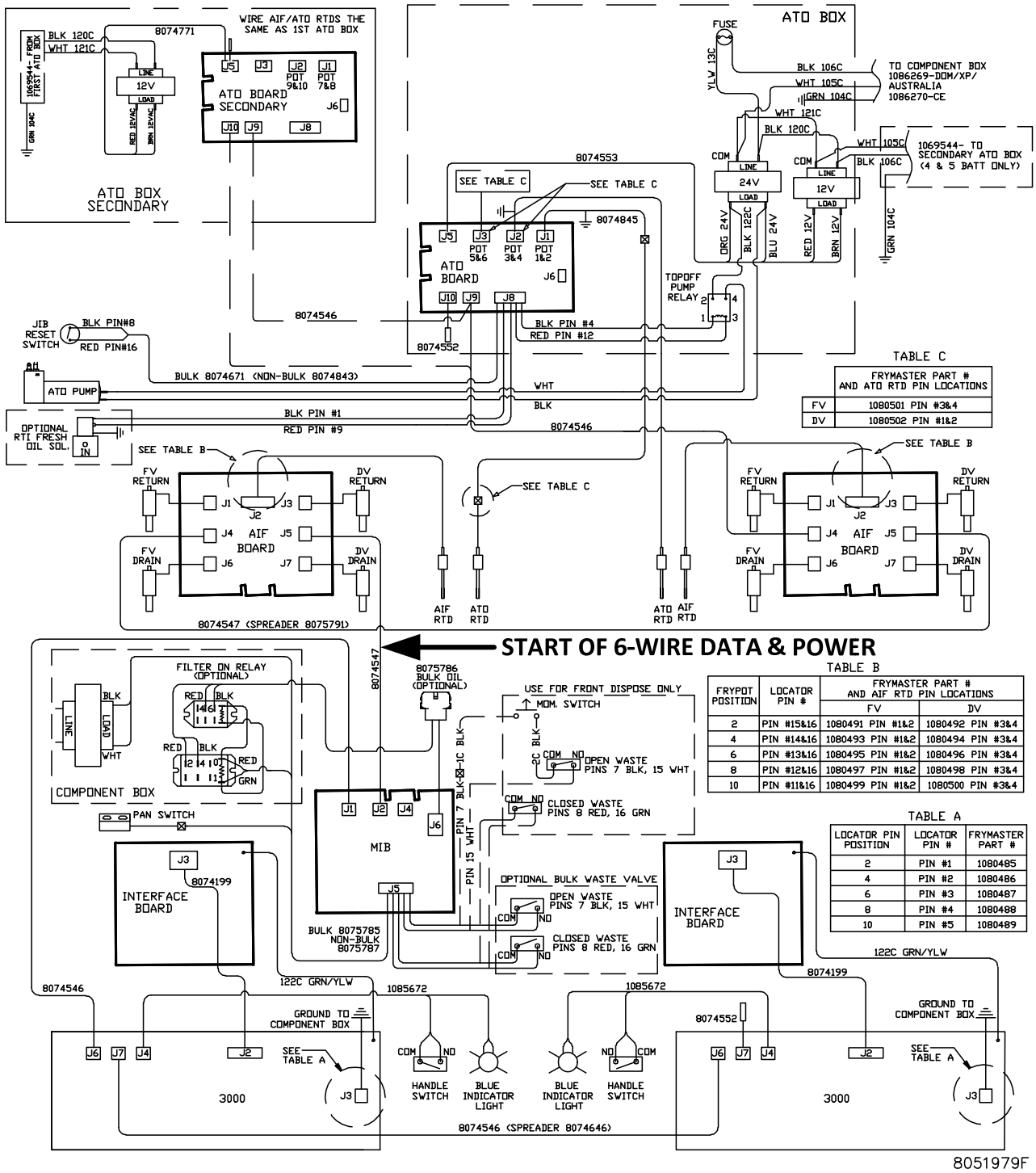

THIS PAGE INTENTIONALLY LEFT BLANK

FRYMASTER
8700 LINE AVENUE, SHREVEPORT, LA 71106-6800

800-551-8633
318-865-1711
WWW.FRYMASTER.COM
EMAIL: FRYSERVICE@WELBILT.COM

WELBILT®
Bringing innovation to the table

WWW.WELBILT.COM

Welbilt provides the world's top chefs, and premier chain operators or growing independents with industry leading equipment and solutions. Our cutting-edge designs and lean manufacturing tactics are powered by deep knowledge, operator insights, and culinary expertise. All of our products are backed by KitchenCare® – our aftermarket, repair, and parts service.

- CLEVELAND
- CONVOTHERM®
- DELFIELD®
- FITKITCHEN™
- FRYMASTER®
- GARLAND
- KOLPAK®
- LINCOLN
- MANITOWOC®
- MERCO®
- MERRYCHEF®
- MULTIPLEX®

©2017 Welbilt Inc. except where explicitly stated otherwise. All rights reserved. Continuing product improvement may necessitate change of specifications without notice.
Part Number FRY_P_8197117 02/2018

Commercial Kitchen Equipment Parts

Find more Frymaster equipment resources at

parthubz.com/equipment/frymaster

Need parts or service?

Call 833-700-8006

support@parthubz.com

parthubz.com