Commercial Kitchen Equipment Parts

FRYMASTER FPGL330CA

Frymaster FPGL330CA Specification Sheet

Provided by PartHubz

parthubz.com

833-700-8006 | support@parthubz.com

FRYMASTER

OCF30ATOG Ultimate Oil-Conserving Gas Fryers With ATO -- Domestic & Export

Project_____

Item_____

Quantity_____

CSI Section 11400_____

Approval_____

Date_____

OCF30ATOG Ultimate Oil-Conserving Gas Fryers -- Domestic & Export

Models

- ☐ FPGL230CA
- ☐ FPGL230-2LCA
- ☐ FPGL230-2RCA
- ☐ FPGL230-4CA
- ☐ FPGL330CA
- ☐ FPGL330-2LCA
- ☐ FPGL330-2RCA
- ☐ FPGL330-4LCA
- ☐ FPGL330-4RCA
- ☐ FPGL330-6CA
- ☐ FPGL430CA
- ☐ FPGL430-2LCA
- ☐ FPGL430-2RCA
- ☐ FPGL430-4LCA
- ☐ FPGL430-4RCA
- ☐ FPGL430-6LCA
- ☐ FPGL430-6RCA
- ☐ FPGL430-8CA
- ☐ FPGL530CA
- ☐ FPGL530-2LCA
- ☐ FPGL530-2RCA
- ☐ FPGL530-4LCA
- ☐ FPGL530-4RCA
- ☐ FPGL530-6LCA
- ☐ FPGL530-6RCA
- ☐ FPGL530-8LCA
- ☐ FPGL530-8RCA
- ☐ FPGL530-10CA

- 40% less oil; 10% less energy
- SMART4U® 3000 Controller
  - Maintains food quality
  - Extends oil life
  - Monitors equipment performance
  - Supports frystation management best practices

Standard Features

- 30-lb. (15 liter) frypot with open-pot design requires 40% less oil to cook as much food as frypots almost twice its size, while using 10% less energy and producing less waste.
- Frying area 13" x 14" x 3-3/4" (33 x 36 x 9.5 cm) full frypot; 6" x 14" x 3-1/2" (15 x 36 x 8.9 cm) split frypot
- SMART4U® Technology
  - -- Oil Attendant® – automatically replenishes oil from Jug-in-box (JIB) conveniently located inside the fryer cabinet.
  - -- 3000 controller has operation management features that monitor and help control food and oil quality, oil life, and equipment performance. Has 20 programmable cook buttons and auto adjusts cook time to load size.
- Innovative safety features offer proprietary advantages over other fryers--automatic high-limit reset and audible alarm if 2nd drain is opened.
- Independent frypot construction of batteries makes it easy to repair or replace a frypot while maintaining continuous operation.
- Durable, infrared burners.
- Center-mounted RTD, 1° action thermostat
- Built-in filtration with rear oil flush puts filtration where it's most convenient to use, right in the fryer battery.
- Drain safety switch
- Stainless steel frypot, door, and cabinet sides
- Adjustable casters
- Gas connection -- see chart on back

Options & Accessories

- ☐ Baskets lifts (except Australia)
- ☐ Spreader cabinet(s) -- must fit within a 5-cabinet fryer battery
- ☐ Bulk oil: dispose and/or fresh (rear only)
- ☐ Bulk oil: dispose and/or fresh kit (rear only) -- call KitchenCare® 1-844-724-2273
- ☐ Stainless steel frypot covers
- ☐ Sediment tray for full frypot only
- ☐ Fish plate for full frypot only
- ☐ Semi-solid/solid shortening heater
- ☐ Splash shield
- ☐ Full basket
- ☐ Triplet basket
- ☐ Chicken/Fish tray
- ☐ Stainless steel JIB box
- ☐ Foam deck basket banger
- ☐ Crumb scoop

Specifications

Frymaster's OCF30ATOG gas fryers are the ultimate oil-conserving, high-performance fryers, available in 2-4 frypot battery models. As operators are pressured to do more with less, the OCF30ATOG gas fryers help improve profit margins with labor and energy-saving features, contribute to green and sustainability initiatives, safeguard workers, and move toward healthier eating.

The open stainless steel frypot is easy to clean. These fryers reduce operating costs by using less oil, 30-lbs versus 50-lbs. Oil life is maximized because the smaller frypot maintains a favorable ratio of fresh to used oil. This higher ratio of fresh oil slows down the accumulation of breakdown products that shortens oil life so the oil lasts longer. Less oil to fill and longer times between fills saves operators well over 40% on their oil costs.

This savings helps meet consumer demand for healthier food choices and regulatory mandates to use trans fat-free oils by offsetting the higher cost of these oils. A new COOL Mode feature reduces the temperature when the fryer is not in use and saves energy.

The built-in filtration system encourages more frequent filtering, which preserves oil life and ensures consistent, great-tasting food. The simple, proven, 2-lever process has recessed handles tucked safely inside the cabinet to prevent unplanned filtration and dangerous extension into busy work spaces.

The independent frypot construction of the OCF30ATOG gas fryers makes it easy to repair or replace a frypot while maintaining continuous operation and protects operators against non-manufacturing defect, full-battery replacement costs. Reliable operation is backed globally by Welbilt's KitchenCare®.

The OCF30ATOG gas fryer line-up offers 2-5 frypot (full and/or split) batteries.

- 70,000 Btu/hr. input (17,632 kcal/hr.) (20.5 kw) per full frypot
- 35,000 Btu/hr. input (8,816 kcal/hr.) (10.2 kw) per split frypot

*Liter conversions are for liquid shortening @ 70° F.

ENERGY STAR

WELBILT enerlogic

C US

Approved for Australia

NSF

Approved for Korea

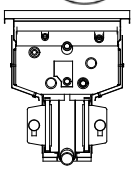

OCF30ATOG Gas Frypot

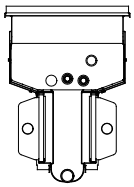

Standard Gas Frypot

8700 Line Avenue
Shreveport, LA 71106-6800
USA

Tel: 318-865-1711
Tel: 1-800-221-4583
Fax: 318-868-5987
E-mail: info@frymaster.com

www.frymaster.com

Bulletin No. 818-0657
Revised 8/10/17

WELBILT

FRYMASTER

OCF30ATOG Ultimate Oil-Conserving Gas Fryers -- Domestic & Export

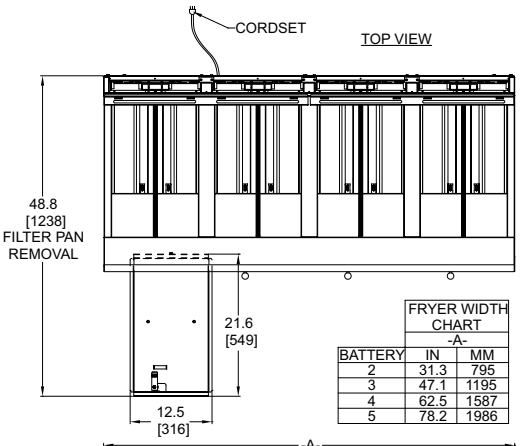

FRYER WIDTH CHART -A-		
BATTERY	IN	MM
2	31.3	795
3	47.1	1195
4	62.5	1587
5	78.2	1986

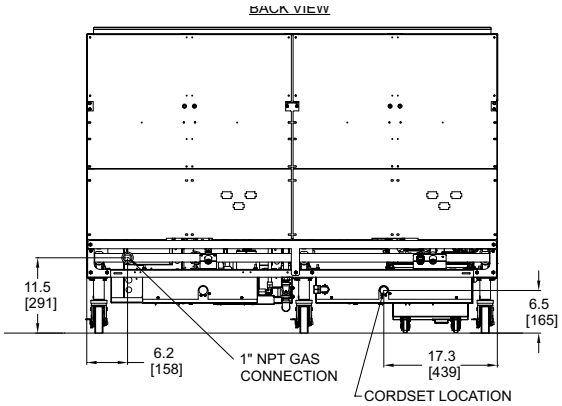

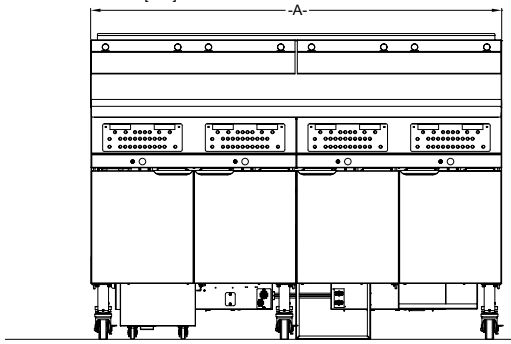

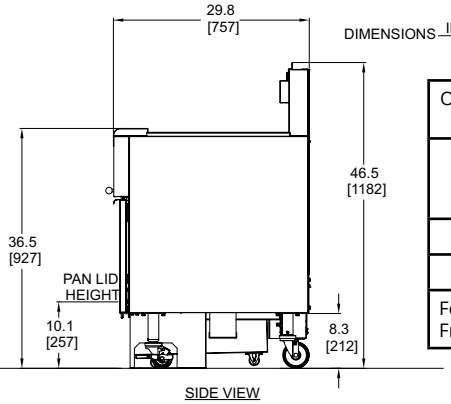

OCF30ATOG Gas Connection Requirements	
No. of Fryers	Gas Connection Size
2 - 4	One 1"
5	Two 1
For Germany 1/2" NPT Per Frypot	

DIMENSIONS

MODEL NO.	OIL CAPACITY	OVERALL SIZE (cm)			NET WEIGHT	*APPROXIMATE SHIPPING INFORMATION					
		WIDTH	DEPTH	HEIGHT		WEIGHT	CLASS	CU. FT.	DIMENSIONS (cm)		
FPGL230CA FPGL230CA SPLIT	30 lbs. (15 liters) Full Frypot 17 lbs. (8.5 liters) Split Frypot	31-1/4" (79.4)	29-7/8" (75.9)	46-1/2" (118.1)	500 lbs. (227 kg)	544 lbs. (247 kg)	77.5	51	**W** 38" (96.5)	**D** 44" (111.8)	**H** 53" (134.6)
FPGL330CA FPGL330CA SPLITS		47-1/8" (119.7)			675 lbs. (306 kg)	723 lbs. (328 kg)		72	53" (134.6)		53" (134.6)
FPGL430CA FPGL430CA SPLITS		62-1/2" (158.8)			858 lbs. (389 kg)	908 lbs. (412 kg)		98	70 (177.8)		55" (139.7)
~~FPGL530CA~~ ~~FPGL530CA~~ SPLITS		78-1/4" (198.8)			1,039 lbs. (471 kg)	1,077 lbs. (489 kg)		120	86" (218.4)		55" (139.7)

*Information is APPROXIMATE and may vary at time of shipment due to options/add-ons per customer request.

POWER REQUIREMENTS

MODEL NO.	BASIC DOMESTIC/EXPORT			OPTIONS DOMESTIC/EXPORT
	CONTROLS/ FRYPOT	FILTER	AUTO TOP OFF/FRYPOT	BASKET LIFTS/ FRYPOT
FPGLCA	120V 1 A 220V 1 A 230V 1 A 240V 1 A 250V 1 A	120V 8 A 220V 5 A 230V 5 A 240V 5 A 250V 5 A	120V 1 A 220V 1 A 230V 1 A 240V 1 A 250V 1 A	120V 3 A 220V 2 A 230V 2 A 240V 2 A 250V 2 A

Available for natural gas, propane, butane and any LP gas combination (butane and LP combinations not CSA or AGA approved).
Liter conversions are for liquid shortening @ 70° F.
Contact Customer Service at 1-800-221-4583 inside USA; +1-318-865-1711 outside USA.

NOTES

- 5 ft. (1.5 m) grounded cord set provided on Domestic fryers.
- 8 ft. 10 " (2.7 m) grounded cord set provided on Export/CE fryers.
- 1-1/2" (3.8 cm) kitchen main manifold gas supply line required. Gas inlet size (I.D.) should be no smaller than that provided for connection to the fryers. See service manual and/or plumbing codes for proper pipe sizing. Recommended minimum store manifold pressure to be 6" W.C. for natural gas and 11" W.C. for L.P. gas. Check plumbing codes for proper supply line sizing to attain burner manifold pressure of 3.0" W.C. natural or 8.25" W.C. L.P.
- Natural gas only for New Zealand.
- **DO NOT CURB MOUNT**

CLEARANCE INFORMATION

- A minimum of 24" (61.0 cm) should be provided at the front of the unit for servicing and proper operation, and 6" (15.2 cm) between the sides and rear of the fryer to any combustible material.

HOW TO SPECIFY

FPGL30CA High-efficiency, oil-conserving, 30-lb. open frypot (full or split) gas fryer with Auto Top- Off, 3000 controller, built-in filtration, casters and stainless steel frypot, door, and cabinet sides.

MODEL NO. EXPLANATION: FPGLX30CA & FPGLX30-YZCA

FP	=	Built-in filter: FM represents built-in filter with spreader	-Y	=	Split frypot(s) (-2 to -8)
X	=	Number of frypots (1-4)	Z	=	Position of split frypot (L = left, C = center, R = right)
30	=	30-lb. oil capacity	A	=	Auto Top Off
C	=	Controller	BL	=	Basket lifts

8700 Line Avenue
Shreveport, LA 71106-6800
USA

Tel: 318-865-1711
Tel: 1-800-221-4583
Fax: 318-868-5987
E-mail: info@frymaster.com

www.frymaster.com
Bulletin No. 818-0657
Revised 8/10/17

Litho in U.S.A. ©Frymaster, LLC

WELBILT

We reserve the right to change specifications appearing in this bulletin without incurring any obligation for equipment previously or subsequently sold. Check www.frymaster.com for updates.

Commercial Kitchen Equipment Parts

Find more Frymaster equipment resources at

parthubz.com/equipment/frymaster

Need parts or service?

Call 833-700-8006

support@parthubz.com

parthubz.com