Commercial Kitchen Equipment Parts

FRYMASTER GF14

Frymaster GF14 service-manual

Provided by PartHubz

parthubz.com

833-700-8006 | support@parthubz.com

GF14 and GF40 Series Gas Fryers

Service & Parts Manual

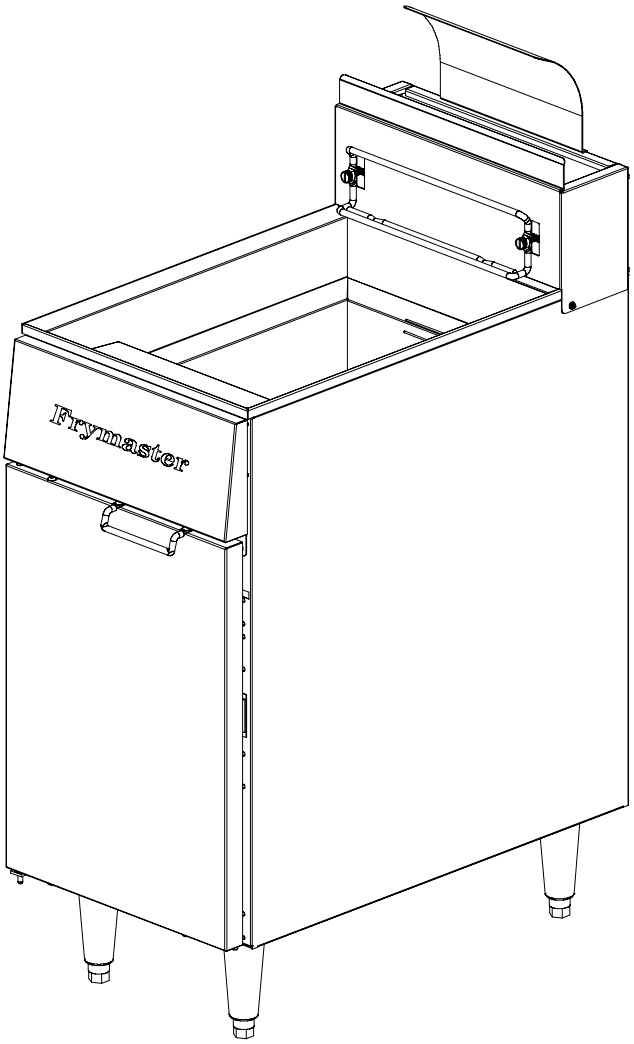

Frymaster

Frymaster, a member of the Commercial Food Equipment Service Association, recommends using CFESA Certified Technicians.

24-Hour Service Hotline 1-800-551-8633

APRIL 2009

8195888

NOTICE

This appliance is intended for professional use only and is to be operated by qualified personnel only. A Frymaster/DEAN Factory Authorized Service Center (FASC) or other qualified professional should perform installation, maintenance, and repairs. Installation, maintenance, or repairs by unqualified personnel may void the manufacturer's warranty. See Chapter 1 of this manual for definitions of qualified personnel.

NOTICE

This equipment must be installed in accordance with the appropriate national and local codes of the country and/or region in which the appliance is installed. See NATIONAL CODE REQUIREMENTS in Chapter 2 of this manual for specifics.

NOTICE TO U.S. CUSTOMERS

This equipment is to be installed in compliance with the basic plumbing code of the Building Officials and Code Administrators International, Inc. (BOCA) and the Food Service Sanitation Manual of the U.S. Food and Drug Administration.

NOTICE

Drawings and photos used in this manual are intended to illustrate operational, cleaning and technical procedures and may not conform to onsite management operational procedures.

NOTICE TO OWNERS OF UNITS EQUIPPED WITH COMPUTERS

U.S.

This device complies with Part 15 of the FCC rules. Operation is subject to the following two conditions: 1) This device may not cause harmful interference, and 2) This device must accept any interference received, including interference that may cause undesired operation. While this device is a verified Class A device, it has been shown to meet the Class B limits.

CANADA

This digital apparatus does not exceed the Class A or B limits for radio noise emissions as set out by the ICES-003 standard of the Canadian Department of Communications.

Cet appareil numerique n'emet pas de bruits radioelectriques depassany les limites de classe A et B prescrites dans la norme NMB-003 edictee par le Ministre des Communcations du Canada.

⚠ DANGER

Improper installation, adjustment, maintenance or service, and unauthorized alterations or modifications can cause property damage, injury, or death. Read the installation, operating, and service instructions thoroughly before installing or servicing this equipment. Only qualified service personnel may convert this appliance to use a gas other than that for which it was originally configured.

⚠ DANGER

No structural material on the fryer should be altered or removed to accommodate placement of the fryer under a hood. Questions? Call the Frymaster/Dean Service Hotline at 1-800-551-8633.

⚠ DANGER

Adequate means must be provided to limit the movement of this appliance without depending upon the gas line connection. Single fryers equipped with legs must be stabilized by installing anchor straps. All fryers equipped with casters must be stabilized by installing restraining chains. If a flexible gas line is used, an additional restraining cable must be connected at all times when the fryer is in use.

⚠ DANGER

The front ledge of the fryer is not a step! Do not stand on the fryer. Serious injury can result from slips or contact with the hot oil.

⚠ DANGER

Do not store or use gasoline or other flammable liquids or vapors in the vicinity of this or any other appliance.

⚠ DANGER

Instructions to be followed in the event the operator smells gas or otherwise detects a gas leak must be posted in a prominent location. This information can be obtained from the local gas company or gas supplier.

⚠ DANGER

This product contains chemicals known to the state of California to cause cancer and/or birth defects or other reproductive harm.

Operation, installation, and servicing of this product could expose you to airborne particles of glasswool or ceramic fibers, crystalline silica, and/or carbon monoxide. Inhalation of airborne particles of glasswool or ceramic fibers is known to the State of California to cause cancer. Inhalation of carbon monoxide is known to the State of California to cause birth defects or other reproductive harm.

GF14 and GF40 SERIES GAS FRYERS
TABLE OF CONTENTS

CHAPTER 1: Service Procedures

1.1 Functional Description 1-1
1.2 Accessing Fryers for Servicing 1-2
1.3 Cleaning the Gas Valve Vent Tube 1-2
1.4 Checking the Burner Manifold Pressure 1-3
1.5 Adjusting Deflector Spacing and Alignment 1-3
1.6 Adjusting the Pilot Flame 1-3
1.7 Replacing Fryer Components 1-4
1.7.1 Replacing the Operating Thermostat 1-4
1.7.2 Replacing the High-Limit Thermostat 1-5
1.7.3 Replacing Deflectors 1-6
1.8.4 Replacing the Gas Valve 1-7
1.7.5 Replacing the Thermopile or Pilot Assembly 1-7
1.7.6 Replacing the Frypot 1-9
1.8 Troubleshooting and Problem Isolation 1-9
1.8.1 Pilot Failure 1-10
1.8.2 Improper Burner Functioning 1-11
1.8.3 Improper Temperature Control 1.12
1.8.4 Leaking 1.12
1.9 Wiring Diagrams 1-13
1.9.1 Current Production Units with Honeywell Gas Valve 1-13
1.9.2 Early Production Units with Robertshaw Gas Valve 1-14

CHAPTER 2: GF14 Parts Lists

Accessories 2-1
Burner and Gas Supply Components 2-2
Cabinetry Components 2-4
Frypot and Related Components 2-6

CHAPTER 3: GF40 Parts Lists

Accessories 3-1
Burner and Gas Supply Components 3-2
Cabinetry Components 3-4
Frypot and Related Components 3-6

GF14/GF40 SERIES GAS FRYERS
CHAPTER 1: SERVICE PROCEDURES

NOTE: This manual is to be used in conjunction with the GF14/GF40 Installation and Operation Manual (P/N 819-8887). Be sure to have both manuals on hand when making service calls.

1.1 Functional Description

The GF14 and GF40 Series fryers contain a welded steel (stainless or cold-rolled) frypot that is directly heated by gas flames that are diffused evenly over its lower surface by deflectors. In GF14s, each deflector is made of a single piece of stainless steel; in GF40s, the deflectors are comprised of a ceramic target attached to a stainless steel bracket. The rear deflector on both fryers consists of a box-like mount that is attached to the flue assembly on the back of the fryer. As with the deflectors on the burner assembly, the rear deflector on GF40 fryers has a ceramic target.

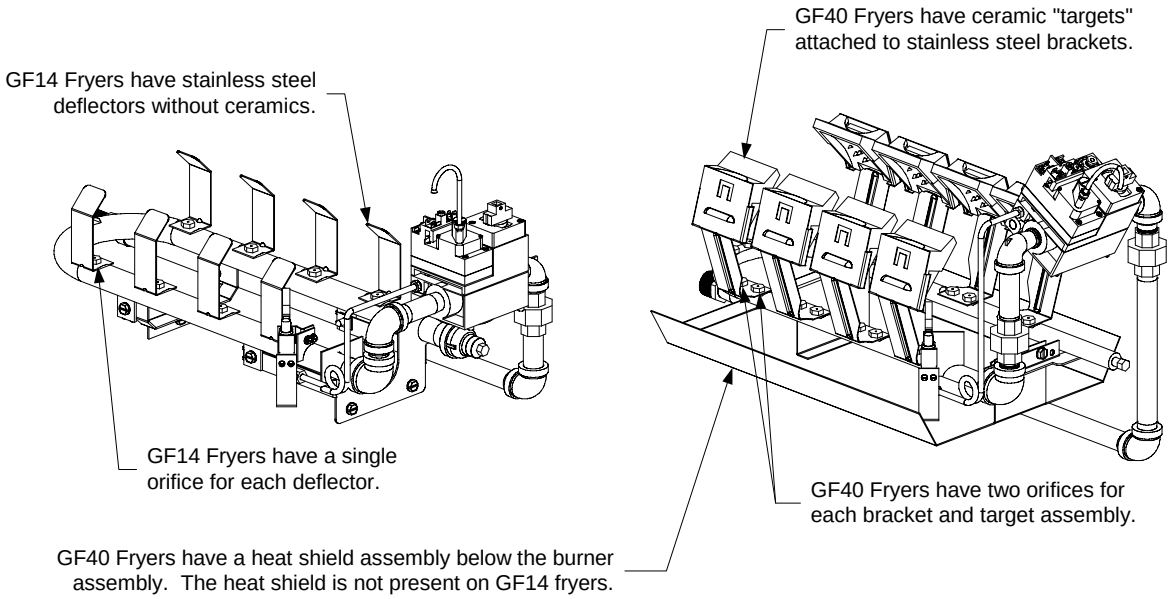

The flames originate from orifices in a U-shaped burner manifold positioned beneath the frypot. The orifice diameters differ for natural and Propane (LP) gas and for fryers as indicated in the accompanying table (NOTE: This table shows only the orifices used in elevations up to 1999 feet/609 meters. See Chapter 2 (GF14) or Chapter 3 (GF40) for orifices required at other elevations). GF14 fryers have one orifice per deflector; GF40 fryers have two orifices per deflector assembly.

GF14/GF40 Series Orifice Sizes (0-1999 ft/609 m)		
Fryer & Gas Type	**Inches**	**Millimeters**
GF14 Natural	0.065	1.65mm
GF14 Propane (LP)	0.041	1.05mm
GF40 Natural	0.057	1.45mm
GF40 Propane (LP)	0.034	0.86mm

An electromechanical millivolt gas valve regulates gas flow to the burner manifold. GF14/GF40 fryers use a pilot ignition system to control burner firing.

Pilot Ignition System

The pilot ignition system is made up of the pilot orifice, pilot hood, and a thermopile. The pilot serves two purposes: lighting the burner and heating the thermopile. In operation, the thermopile is in contact with the pilot flame and generates millivolts. The millivolt output passes through a normally closed high-limit switch and energizes the gas valve pilot coil, which in turn opens the pilot valve. If the pilot flame is extinguished, voltage is lost to the gas valve pilot coil and the pilot valve closes.

Thermostats

These fryers are equipped with adjustable ***operating thermostats***. The temperature at which the thermostat opens and closes is adjusted by physically changing the setting of the thermostat itself by means of an attached knob. The thermostat used in the GF14/GF40 Series fryers is sensitive to one-degree changes in temperature.

Fryers in the GF14/GF40 series are also equipped with a ***high-limit thermostat.*** In the event that the fryer fails to properly control the oil temperature, the high-limit thermostat prevents the fryer from overheating to the flash point. The high-limit thermostat acts as a normally closed power switch that opens when exposed to temperatures above 425ºF to 450ºF (218ºC to 232ºC).

1.2 Accessing Fryers for Servicing

⚠ DANGER
Moving a fryer filled with cooking oil/shortening may cause spilling or splattering of the hot liquid. Follow the draining instructions in Chapter 3 of the Installation and Operation manual before attempting to relocate a fryer for servicing.

1. Drain all cooking oil/shortening from the fryer.
2. Shut off the gas supply to the unit and disconnect the unit from the gas supply.
3. Remove any attached restraining devices.
4. Relocate the fryer for service accessibility.
5. After servicing is complete, reconnect the unit to the gas supply and reattach the restraining devices.
6. Refill the frypot with cooking oil/shortening.

1.3 Cleaning the Gas Valve Vent Tube

Refer to Quarterly Checks and Services in Chapter 4 of the Installation and Operation manual.

1.4 Checking the Burner Manifold Pressure

Refer to Semi-Annual Checks and Services in Chapter 4 of the Installation and Operation manual.

1.5 Adjusting Deflector Spacing and Alignment

⚠ DANGER
Drain the frypot or remove the handle from the drain valve before proceeding further.

Proper spacing of the edge of the deflectors is ¾-inch (19mm) from the frypot side. To adjust target spacing, bend the brackets to which they are attached away or toward the frypot to the proper distance. (A length of board of the proper thickness is useful as a gauge to verify spacing and alignment.) The illustration below depicts a typical GF40. The GF14 procedure is the same except that there are no ceramic targets.

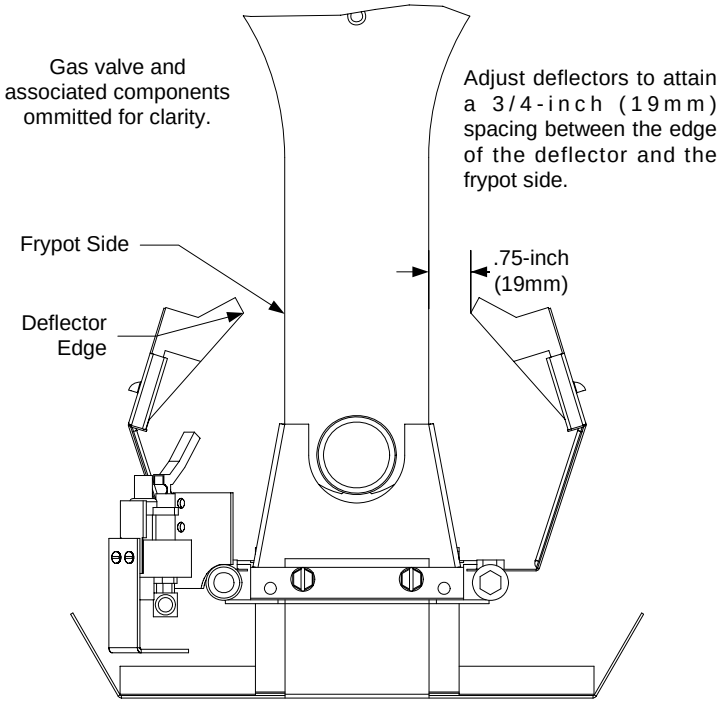

1.6 Adjusting the Pilot Flame

1. Remove the cap shown in the illustration below to access the pilot flame adjustment screw in the gas valve.

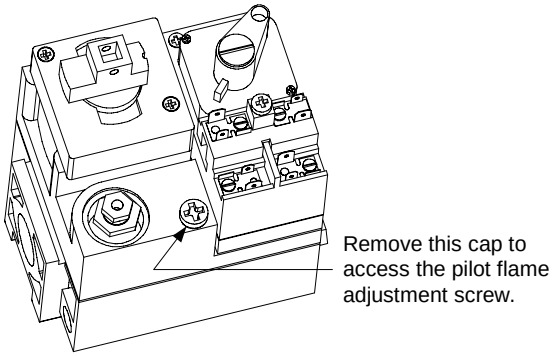

2. Using a small, flat-tipped screwdriver, turn the pilot flame adjustment screw counterclockwise to increase the length of the flame or clockwise to decrease the length of the flame. Adjust the flame to a length of 1 to 1½ inches (25 to 38 mm).

3. Reinstall the pilot flame adjustment screw cap.

1.7 Replacing Fryer Components

1.7.1 Replacing the Operating Thermostat

1. Drain the fryer and turn the gas off.

2. Remove the thermostat knob by pulling straight out on the knob with a firm, steady pull.

3. Disconnect the wires from the thermostat.

4. Remove the two mounting screws to release the thermostat control from its mounting bracket.

5. Straighten the clips that secure the thermostat bulb to the frypot. Use a slotted socket to unscrew the thermostat from the frypot.

6. Loosen the capillary tube compression nut (the small nut) on the replacement thermostat so that it slides freely on the capillary tube. Apply a small amount of Loctite™ PST56765 compound or equivalent to the threads of the large fitting and screw the replacement thermostat securely into the frypot, being careful not to twist the capillary tube as the fitting is tightened. **DO NOT** tighten the capillary tube compression nut at this time.

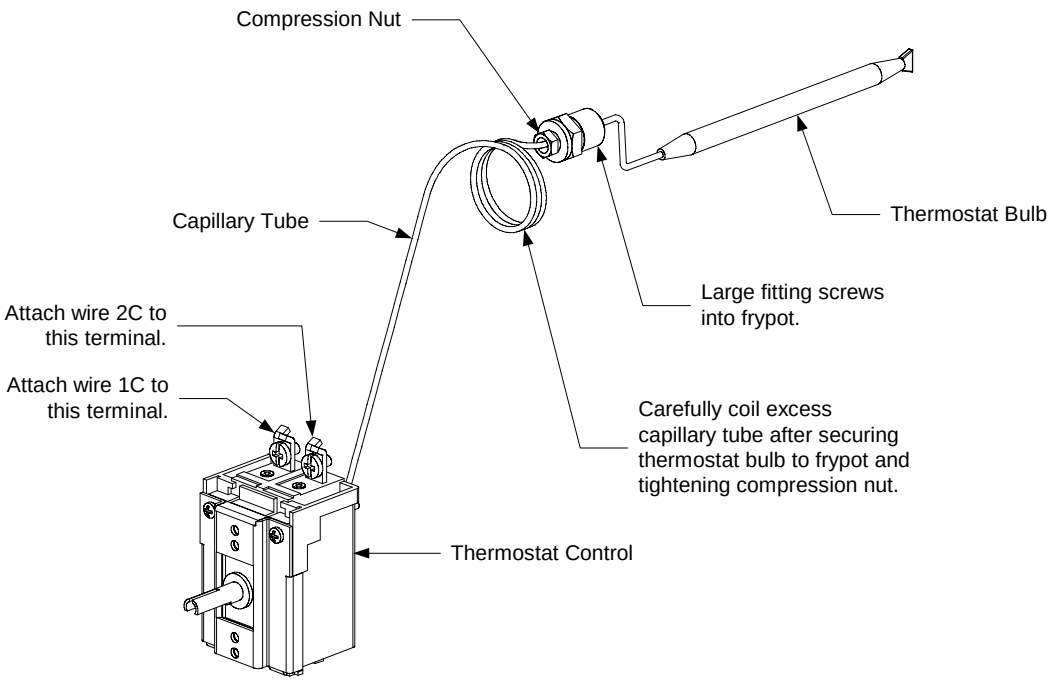

7. Position the thermostat bulb in the retaining clips and fold the clips down to secure it in place.

8. Gently form the capillary tube so that it lies close to the bottom surface and front wall of the frypot, working any slack out through the fitting (see illustration above).
9. Tighten the capillary tube compression fitting and carefully coil the excess capillary tubing as shown in the illustration on Page 1-4. Mount the thermostat control to the mounting bracket using the screws removed in Step 4.

10. Connect the wires disconnected in Step 3 above to the thermostat as shown in the illustration on Page 1-4.

11. Install the thermostat knob on the shaft of the thermostat control.

1.7.2 Replacing the High-Limit Thermostat

1. Drain the fryer and turn the gas off.

2. Disconnect the high-limit wires from the gas valve terminal block.

3. Use a slotted socket to unscrew the thermostat from the frypot.

4. Apply a small amount of Loctite™ PST56765 compound or equivalent to the threads of the new high-limit and screw it securely into the frypot.

5. Connect the wires to the gas valve terminals as shown in the illustration below (polarity does not matter).

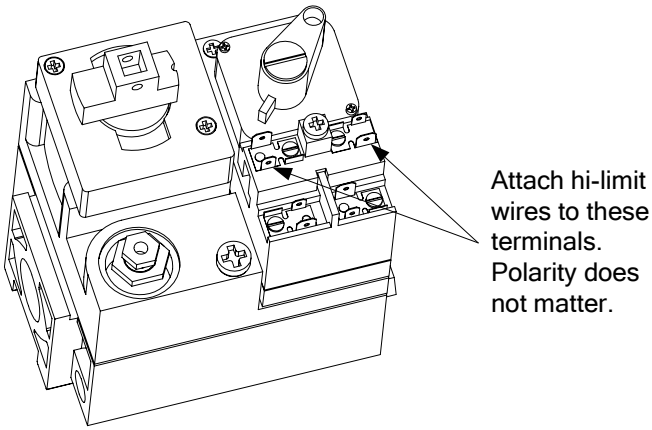

1.7.3 Replacing Deflectors

1. Drain the fryer and disconnect it from the gas supply.

2. Disconnect the wires from the gas valve terminal block, marking each wire to facilitate reconnection.

3. Disconnect the pipe union collar at the right side of the gas valve.

4. On GF40 fryers, remove the burner heat shield hanger screws at the front of the burner and remove the heat shield.

5. Remove the burner hanger screws and lower the front of the burner assembly. Pull it forward to clear the rear burner hanger, then lower the burner to the floor of the cabinet. Carefully pull the burner assembly from the cabinet.

6. **GF14:** Use a ½-inch box end wrench to remove the brass orifice that holds the deflector to the burner manifold. Position the new deflector and reinstall the orifice.

   GF40: To replace only the ceramic targets, straighten the target locking tab with a pair of needle nose pliers or a screwdriver and slide the target up and off the bracket. Recover the insulation from the old target and install with the replacement ceramic. Slide the replacement target onto the bracket, then position the insulation in the opening between the bracket and the ceramic. Bend the locking tab down to secure ceramic in place (see illustration below).

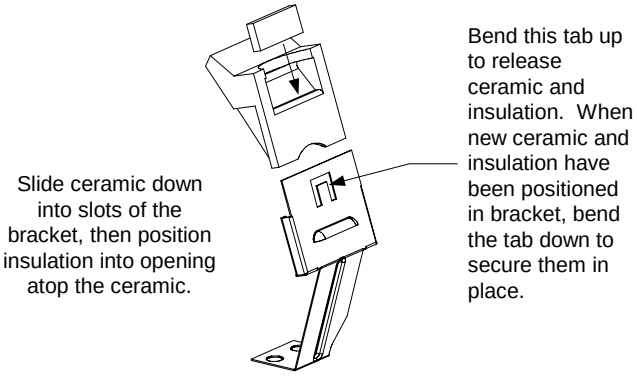

To replace the entire target assembly, use a ½-inch box end wrench to remove the brass orifices that hold the assembly to the burner manifold. Position the new assembly and reinstall the orifices.

⚠ WARNING
Use extreme care to prevent cross-threading and stripping when reinstalling the brass orifices.

7. Reverse steps 1-5 to reinstall the burner assembly. Check spacing and alignment of targets in accordance with Section 1.6.

1.7.4 Replacing the Gas Valve

⚠ DANGER
Drain the frypot or remove the handle from the drain valve before proceeding further.

1. Disconnect fryer from the gas supply.

2. Disconnect the wiring from the gas valve terminal block, marking each wire to facilitate reconnection.

3. Disconnect the pilot gas line fitting from the gas valve and remove the vent tube.

4. **GF14:** Disconnect the pipe union to the right of the gas valve and rotate the valve assembly outward just enough to allow the valve to be unscrewed from the burner manifold piping.

   GF40: Disconnect the pipe unions at each side of the gas valve and remove the valve from the assembly.
5. Remove the fittings from the old gas valve and install them on the replacement valve, using Loctite™ PST56765 or equivalent pipe thread sealant on threads. Install the vent tube removed from the old valve. **DO NOT** use thread sealant on the vent tube.

6. Reverse steps 1-4 to install the replacement valve, reconnecting the wiring in accordance with the wiring diagram on the door of the fryer or with the notes made in Step 2. Return the fryer to operation and check the burner manifold pressure in accordance with the procedure in the Semi-Annual Checks and Services of Chapter 4 of the Installation and Operation manual.

1.7.5 Replacing the Thermopile or Pilot Assembly

⚠ DANGER
Drain the frypot or remove the handle from the drain valve before proceeding further.

A pair of small screws (see illustration below) attaches the pilot assembly, which consists of the pilot and the thermopile, to the burner manifold.

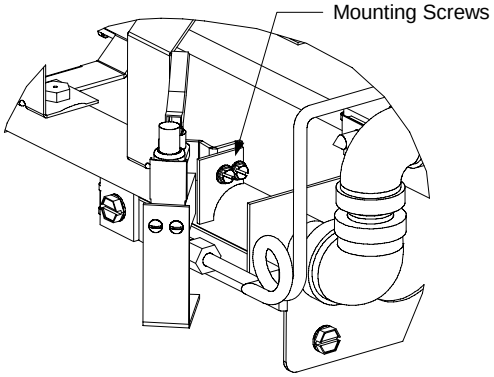

On GF14 units, the pilot and thermopile assembly can be removed by disconnecting the pilot tube and removing the two screws that hold it in place.

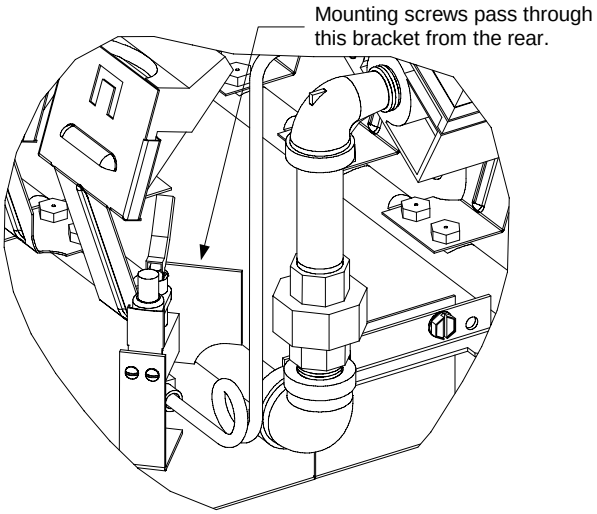

On GF40 units, the pilot and thermopile assembly is attached to its mounting bracket by two screws that pass through the bracket from the rear. The burner assembly should be removed to access these screws.

1. To replace only the thermopile, disconnect the leads from the gas valve, remove the guard, bend the clip at the bottom of the pilot assembly outward, and press the thermopile out of the assembly from the top. Reverse the procedure to install the replacement thermopile.

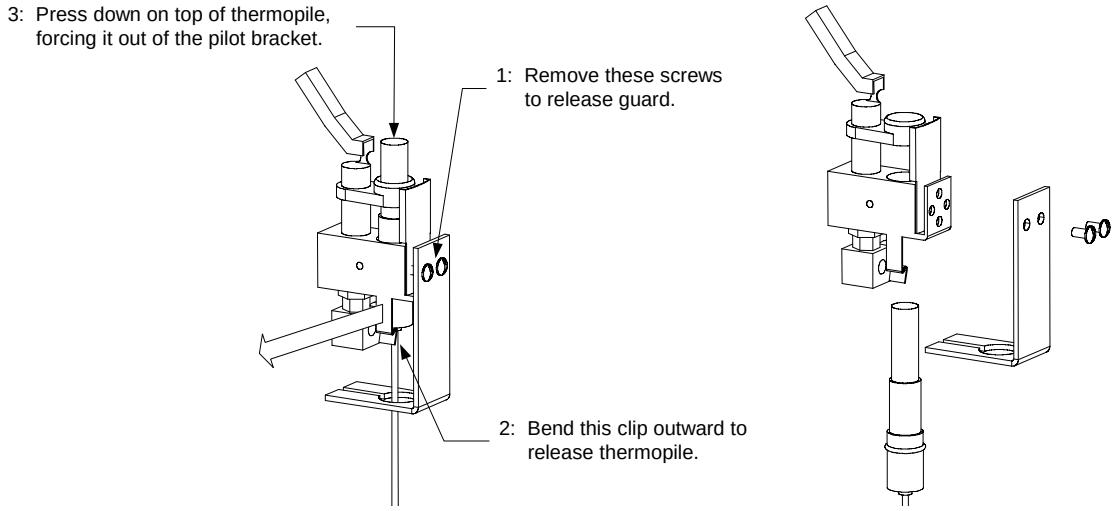

3. To replace the complete pilot assembly:

   a. Disconnect the pilot tube from the bottom of the pilot assembly.

   b. **GF14**: Remove the screws from the pilot-mounting bracket to release the pilot assembly.

      GF40: Remove the burner manifold assembly in accordance with Steps 1-5 of Section 1.8.3.

   c. Disconnect the thermopile lead from the gas valve pilot coil.

   d. Reverse steps a through c to install the replacement pilot assembly.

4. Reinstall the burner assembly by reversing steps 1-5 of Section 1.8.3.

5. Verify that the pilot flame is 1 to 1½-inches long. If not, adjust the pilot flame length in accordance with Section 1.7.

1.7.6 Replacing the Frypot

1. Drain the frypot and disconnect the fryer from the gas supply.

2. Remove all accessories (e.g., frypot covers, drop-in probes, basket hangers, etc.).

3. Remove the screws from the sides and back of the flue cap and lift it off the fryer.

4. Remove the screws from the front cowling (front panel) and pull the bottom edge forward enough to disengage the upper door hinge pin from the hole in the bottom of the cowling. Catch the door with one hand to prevent it from falling when the hinge pin disengages.

5. Remove the door by lifting it upward to disengage the lower hinge pin from the hinge bracket, being careful not to lose the three Teflon spacers located between the lower edge of the door and the hinge bracket.

6. Remove the cowling by pulling its bottom edge outward slightly and slipping the upper edge downward from under the front lip of the frypot.

7. Remove the screw from the frypot hold-down bracket located at the center of the cabinet cross brace.

8. Dismount the thermostat control from the thermostat bracket.

9. Disconnect the pipe union on the right side of the gas valve.

10. Lift the frypot assembly upward from the cabinet.

11. Recover the drain valve, high-limit thermostat, operating thermostat, and burner manifold assembly from the failed frypot.

12. Clean the threads on the recovered parts, apply Loctite™ PST 56765 or equivalent thread sealer, and install them on the replacement frypot.

13. Reverse Steps 1-10 to install the replacement frypot in the cabinet.

1.8 Troubleshooting and Problem Isolation

This section is intended to provide technicians with a general knowledge of the broad problem categories associated with this equipment, and the probable causes of each. With this knowledge, the technician should be able to isolate and correct any problem encountered.

Problems you are likely to encounter can be grouped into these broad categories:

1. Pilot failures

2. Improper burner functioning

3. Improper temperature control

4. Leaking

The probable causes and corrective actions for each category are discussed in the following sections.

1.8.1 Pilot Failures

Pilot failures fall into one or the other of two categories – failure to light or failure to remain lit.

Pilot Fails to Light

1. Gas is not being supplied to the valve: Check for a closed gas cutoff valve upstream of the gas valve. Also verify that the gas line quick disconnect fitting at the rear of the fryer (if so equipped) is properly connected.

2. Blocked pilot orifice: If gas is reaching the valve but the pilot will not light, check for an obstruction in the pilot orifice, especially in new installations. If the orifice is clear, check to be sure that the pilot adjustment screw is not completely closed.

Pilot Does Not Remain Lit When Gas Valve Knob is Released

The electromechanical Honeywell gas valve used on the GF14 and GF40 fryers has a pair of normally open coils (electromagnetic switches) that close when low voltage is applied to them. If the coils do not close, the valve will not open to supply gas to the pilot or to the burner manifold. Turning the gas valve knob to the pilot position and pressing it in bypasses the pilot coil, allowing the pilot to be lighted. The pilot flame heats the thermopile, which generates the voltage required to close the coils. If the pilot flame goes out when the knob is released, there are four probable causes:

1. **Open or grounded high-limit:** The high-limit thermostat functions as a normally closed switch. If the high-limit is open or grounded, the gas valve coil will not pull in and no gas will be supplied to the pilot or to the burner manifold.

   Check and Corrective Action: Detach the high-limit leads from the gas valve and check for continuity. If the high-limit fails the continuity check, it must be replaced.
2. **Loose/corroded wiring connections on high-limit or thermopile:** This has the same effect as an open or grounded high-limit. If the gas valve coils do not receive the appropriate voltage from the thermopile, they will not close and no gas will be supplied to the pilot or to the burner manifold.

   Check and Corrective Action: Check wiring connections for corrosion and tightness. Check terminals to verify that they are securely attached to their leads.

3. **Low or no voltage out of thermopile:** If the tip of the thermopile is not surrounded by the pilot flame, it will not generate sufficient voltage to the gas valve coils for them to close. No gas will be supplied to the pilot or to the burner manifold.

   Checks and Corrective Actions:

   Observe pilot flame through the viewing port in the lower left corner of the frypot front baffle assembly. If the pilot flame is less than 1-inch (25mm) adjust the pilot flame in accordance with

Section 1.7. If the flame is being blown away from the pilot, eliminate the draft that is causing it to be blown away from the thermopile.

If the pilot flame correctly impinges the tip of the thermopile, connect a multimeter in series with either of the thermopile leads and its gas valve terminal. Light the pilot and allow it to burn for at least two minutes, then check the voltage output. If voltage is less than 400 millivolts, replace the thermopile.

4. **Malfunctioning gas valve:** If either of the coils in the gas valve fails, no gas will be supplied to the pilot or to the burner manifold.

   Check and Corrective Action: If all the above checks are satisfactory, the gas valve has failed. Replace the gas valve.

1.8.2 Improper Burner Functioning

If the ***burner lights on one side only***, the probable causes are a missing or misaligned rear deflector or improper burner manifold pressure. Clogged burner orifices are usually the cause of ***gaps in burner firing***.

Fluctuating flame intensity is normally caused by improper or fluctuating incoming gas pressure, but may also be the result of variations in the kitchen atmosphere. Variation in the kitchen atmosphere is usually caused by air conditioning and/or ventilation units starting and stopping. As the units start and stop, the pressure in the kitchen may change. Changes in airflow patterns can also affect flame intensity. If the incoming gas pressure is correct and stable, check for variations in the kitchen atmosphere.

Flames "rolling" out of the fryer are usually an indication of negative pressure in the kitchen. Air is being sucked out of the fryer enclosure and the flames are literally following the air. If negative pressure is not the cause, check for high burner manifold gas pressure. An obstructed flue, which prevents the fryer from properly exhausting, may also be the cause.

An ***excessively noisy burner***, especially with ***flames visible above the flue opening***, may indicate that the burner gas pressure is too high, or it may simply be that the gas valve vent tube is blocked. If the gas pressure is correct and the vent tube in unobstructed, the gas valve regulator is probably defective.

Occasionally a burner may apparently be operating correctly, but nevertheless the fryer has a ***slow recovery rate*** (the length of time required for the fryer to increase the oil temperature from 250ºF to 300ºF (121ºC to 149ºC). The primary causes of this are low burner manifold pressure and/or misaligned or missing deflector targets. If both of these causes are ruled out, the probable cause is a gas valve regulator that is out of adjustment. Refer to the **Check Burner Manifold Pressure** procedure in the Semi-Annual Checks and Services section of Chapter 4 of the Installation and Operation manual.

1.8.3 Improper Temperature Control (i.e., failure to control at set point)

Temperature control is a function of several interrelated components, each of which must operate correctly. The principle component, however, is the thermostat.

The thermostat should be checked periodically.

Causes for temperature control problems are damage to the thermostat bulb, kinking of the capillary tube, and broken or loose wiring. Inspect the thermostat components for visible damage.

If there are dents in the bulb, if the capillary is kinked, or if there is obvious damage to the leads, the thermostat should be replaced.

If there is no obvious damage to the thermostat, turn off the gas valve and allow the cooking oil/shortening to cool to at least 15 degrees below the thermostat setting. Disconnect the thermostat leads from the gas valve and check for continuity. If the thermostat fails the continuity check, it must be replaced.

1.8.4 Leaking

Leakage of the frypot almost always will be due to improperly sealed high-limits, thermostats, or drain fittings. When installed or replaced, each of these components must be sealed with Loctite™ PST56765 sealant or equivalent to prevent leakage. In very rare cases, a leak may develop along one of the welded edges of the frypot. When this occurs, the frypot must be replaced.

If the sides and/or ends of the frypot are coated with oil/shortening, the most likely cause is spillage over the top of the frypot rather than leakage.

1.9 Wiring Diagram

1.9.1 Current Production Units with Honeywell Gas Valve

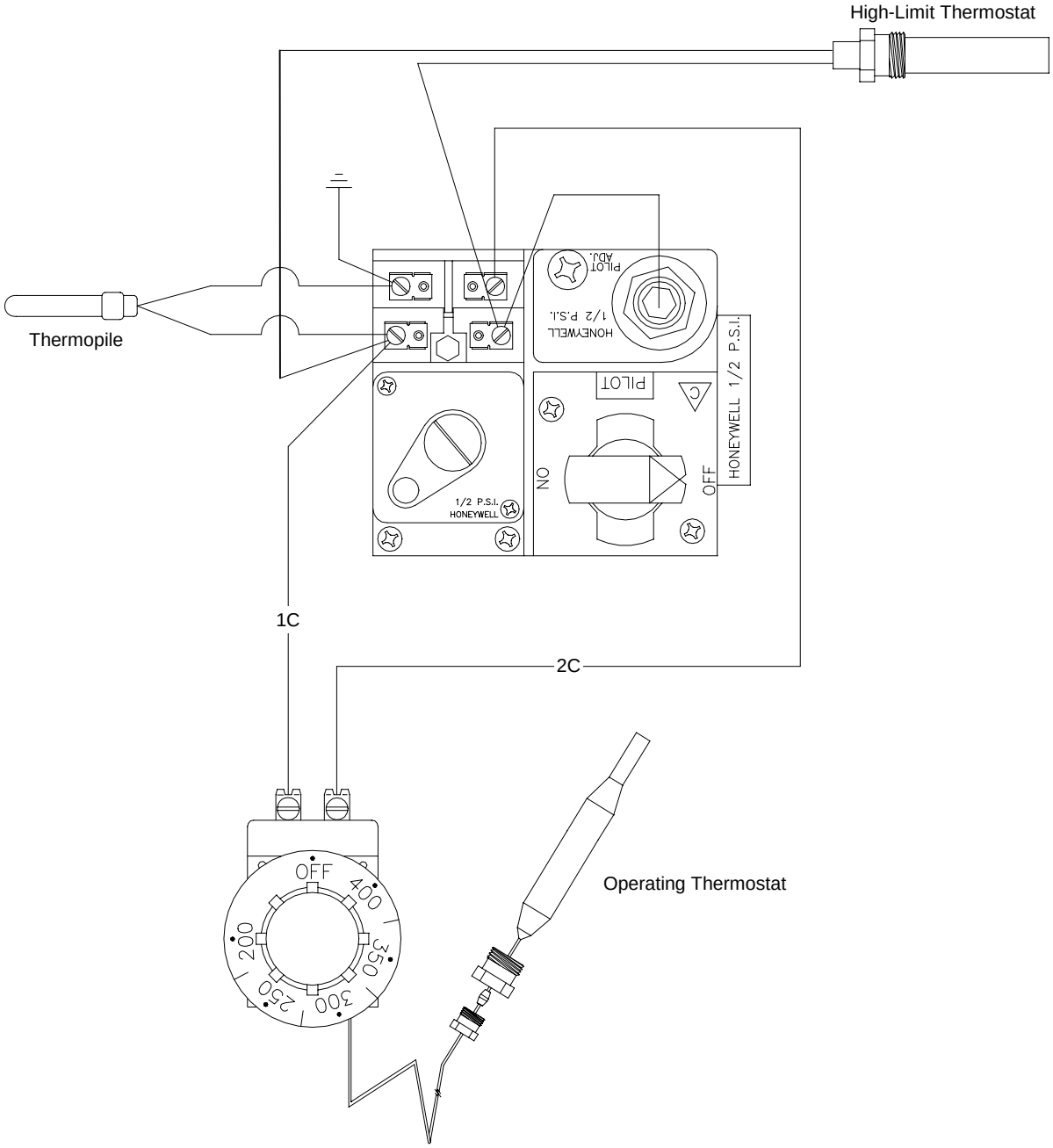

1.9.2 Early Production Units with Robertshaw Gas Valve

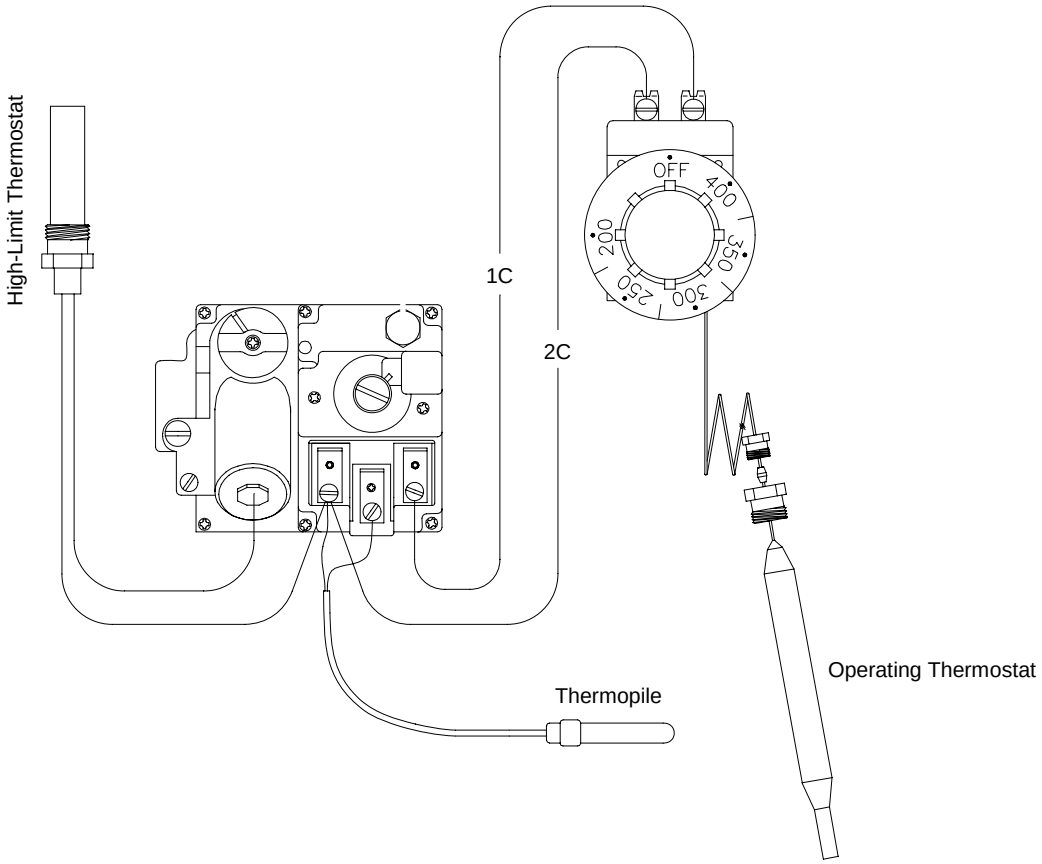

GF14/GF40 SERIES GAS FRYERS
CHAPTER 2: GF14 PARTS LIST

ACCESSORIES

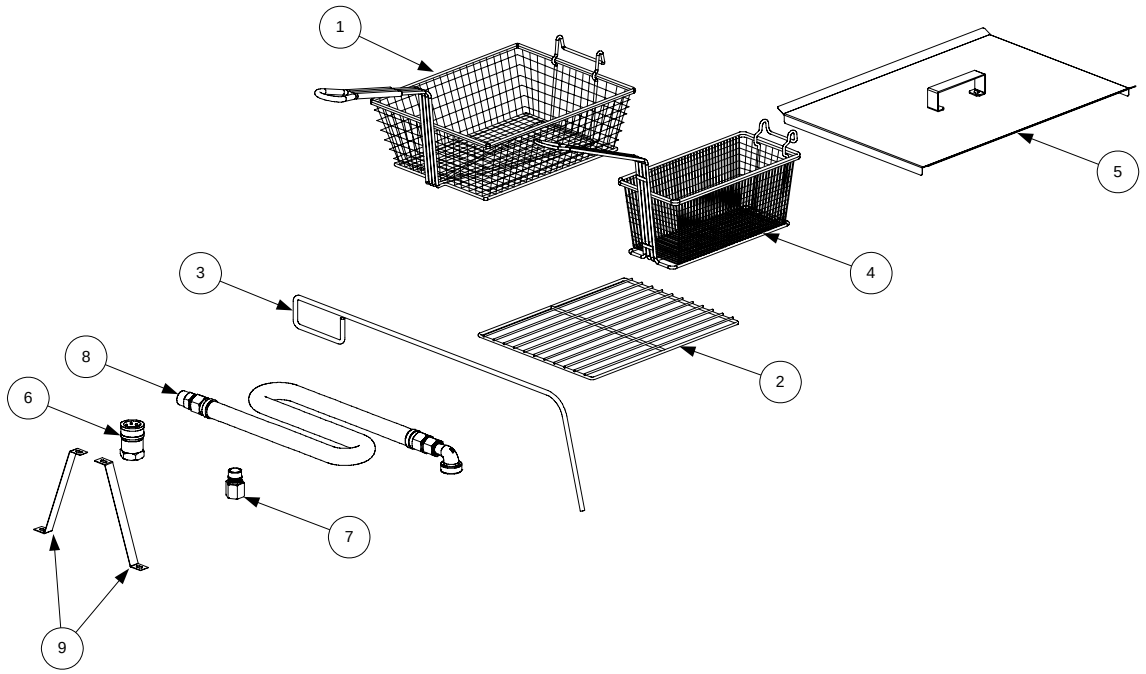

Item	Part #	Component
1	803-0015	Basket, Full
2	803-0032	Rack, Basket Support
3	803-0197	Cleanout Rod, 27-Inch
4	803-0271	Basket, Twin
5	806-5518	Cover, Frypot
*	910-7014	Cover, Spreader Cabinet
6		Quick-Disconnect Fitting, Female
	810-0070	¾-inch
	810-0073	1-inch
7		Quick-Disconnect Fitting, Male
	810-0072	¾-inch
	810-0074	1-inch
8		Hose, Flexible Gas
	810-0083	¾-inch x 36-inch
	810-0084	¾-inch x 48-inch
	810-0088	1-inch x 36-inch
	810-0085	1-inch x 48-inch
9	826-1095	Anchor Strap Kit (for use only on fryers equipped with legs)
*	826-0900	Chain Restraint Kit (for use only on fryers equipped with casters)
*	812-1226	Drain Extension

* Not illustrated.

BURNER AND GAS SUPPLY COMPONENTS

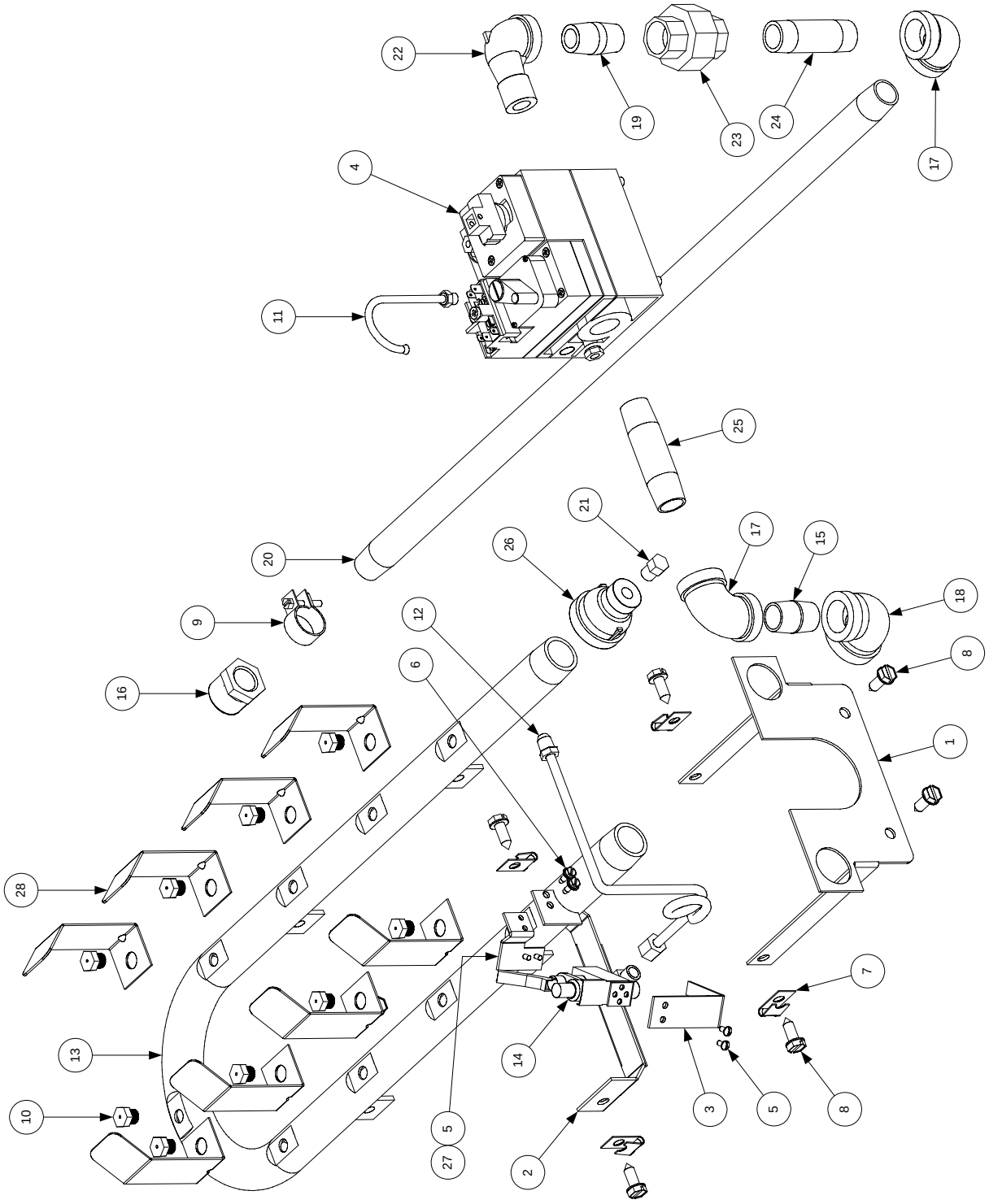

Item	Part #	Component
1	200-0176	Bracket, Front Manifold Mounting
2	200-0177	Hanger, Rear Manifold
3	200-0749	Guard, Thermopile
4		Valve, Honeywell Millivolt Gas (See **NOTE 1**.)
	807-1603	Natural (See **NOTE 2**.)
	807-1604	Propane (See **NOTE 2**.)
5	809-0092	Screw, 5-40 x ¼-inch Slotted Pan Head
6	809-0105	Screw, #8 x ⅜-inch Slotted Hex Washer Head
7	809-0173	Clip, Tinnerman
8	809-0785	Screw, #14 x ¾-inch Slotted Hex Washer Head
9	809-0951	Clamp, Hose
10		Orifice
	826-1398	1.65 mm (for natural gas, 0-1999 feet/0-609 meters) (package of 10)
	812-1223	1.60 mm (for natural gas, 2000-3999/610-1219 meters)
	812-0907	1.55 mm (for natural gas, 4000-5999 feet/1220-1829 meters)
	812-1204	1.50 mm (for natural gas, 6000-7999 feet/1830-2438 meters)
	826-1357	1.45 mm (for natural gas, 8000-8999 feet/2439-2743 meters) (pkg of 10)
	826-1386	1.40 mm (for natural gas, 9000-9999 feet/2744-3048 meters) (pkg of 10)
	826-1354	1.05 mm (for Propane gas, 0-1999 feet/0-609 meters) (package of 10)
	810-0135	1.02 mm (for Propane gas, 2000-3999/610-1219 meters)
	826-1391	0.99 mm (for Propane gas, 4000-5999 feet/1220-1829 meters) (pkg of 10)
	812-0906	0.95 mm (for Propane gas, 6000-7999 feet/1830-2438 meters)
	812-0915	0.93 mm (for Propane gas, 8000-8999 feet/2439-2743 meters)
	812-0910	0.90 mm (for Propane gas, 9000-9999 feet/2743-3048 meters)
11	810-0691	Tube, Gas Valve Vent
12	810-0703	Gas Line, .25-inch x 17.50-inch
13	810-1862	Manifold, Burner
14		Pilot Assembly (Includes bracket, hood, and thermopile. See **NOTE 3**.)
	810-2071	Natural Gas w/.024-inch Orifice 810-0149
	810-2070	Propane Gas w/.013-inch Orifice 810-0148
15	813-0022	Nipple, ½-inch x Close BM NPT
16	813-0031	Bushing, ¾-inch x ½-inch BM NPT Reducer
17	813-0062	Elbow, ½-inch x 90° BM NPT
18	813-0068	Elbow, ¾-inch x ½-inch BM NPT Reducer
19	813-0087	Nipple, ½-inch x 1.50-inch BM NPT
20	813-0108	Nipple, ½-inch x 24.50-inch BM NPT
21	813-0154	Plug, ⅛-inch Hex Head Pipe
22	813-0165	Elbow, ½-inch x 90° BM NPT Street
23	813-0173	Union, ½-inch BM NPT
24	813-0265	Nipple, ½-inch x 2.50-inch BM NPT
25	813-0460	Nipple, ½-inch x 3.00-inch BM NPT
26	813-0584	Reducer, ½--inch x ⅛-inch Bell
27	900-1032	Bracket, Pilot Mounting
28	910-1082	Deflector, GF14

NOTE 1: For gas valve knob only, use P/N 810-0975.

NOTE 2: Use kit 826-1139 to convert valve from natural gas to Propane; use kit 826-1140 to convert from Propane to natural gas. Kits also include appropriate pilot orifices.

NOTE 3: For Pilot only, order P/Ns 810-0426 (Natural) or 810-0427 (Propane). For Thermopile only, order P/N 810-1873.

CABINETRY COMPONENTS

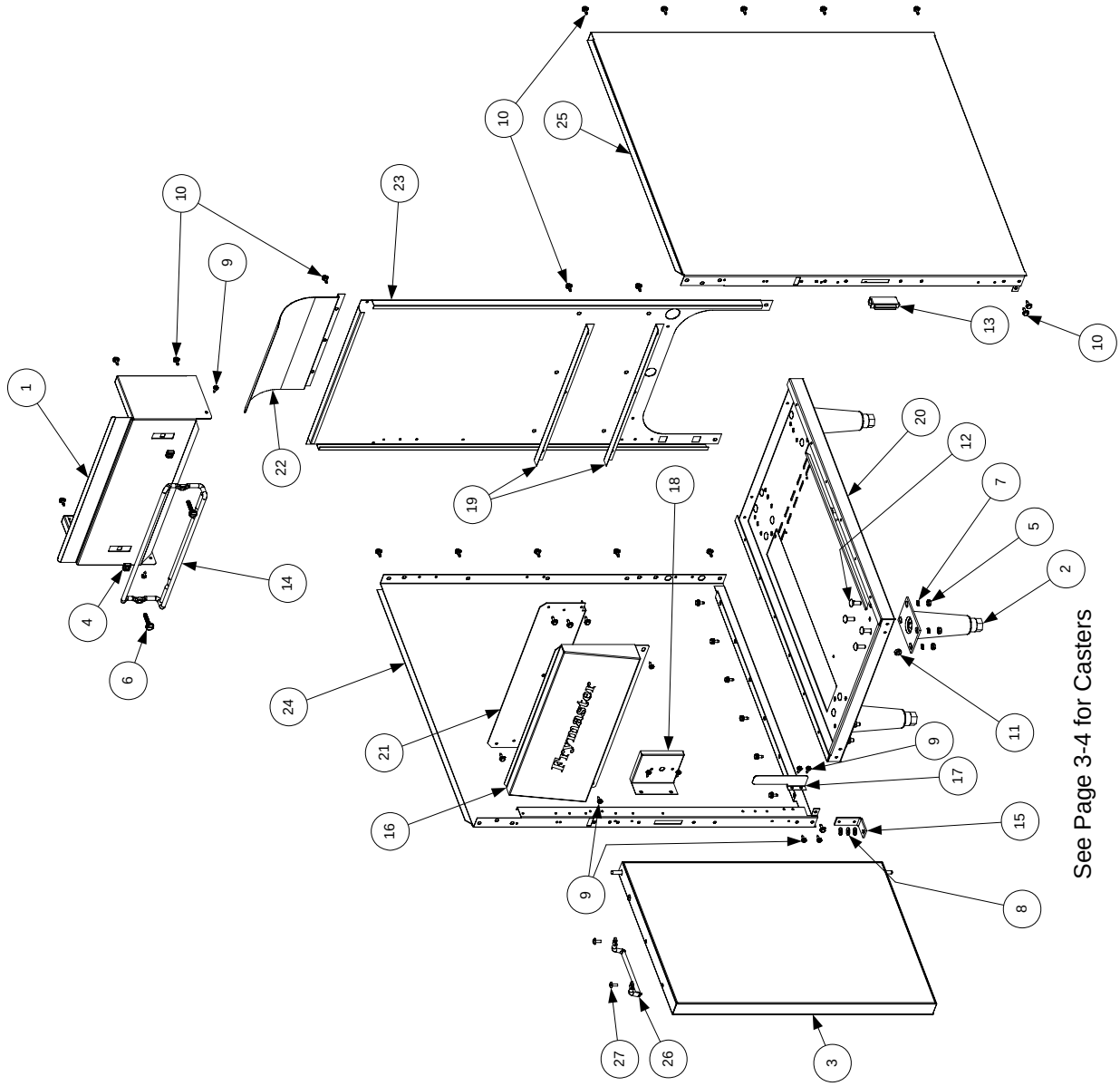

See Page 3-4 for Casters

Item	Part #	Component
1	210-0384	Cap, Flue
2	806-3811	Leg (set of 4)
3	806-8396	Door Assembly
4	826-1351	Retainer, Nut (Nutsert) (package of 10)
5	826-1362	Nut, ¼-20 Hex (package of 10)
6	809-0171	Thumbscrew, ¼-20 x 1⅜-inch
7	809-0191	Washer, ¼-inch Lock
8	809-0193	Washer, ¼-inch Nylon Flat
9	826-1371	Screw, #8 X ½-inch Hex Head Drill Point (package of 25)
10	826-1374	Screw, #10 X ½-inch Hex Head (package of 25)
11	809-0413	Spacer, ¼-inch X .160-inch 8 Gauge Nylon
12	809-0563	Bolt, ¼-20 x ¾-inch Carriage
13	810-1105	Magnet, Offset Door
14	810-1403	Hanger, Wireform Basket (for old-style extruded aluminum use 803-0028)
15	810-1508	Hinge, Universal Door
16	824-0330	Panel, GF14/GF40 Control
17	900-0943	Bracket, Drain Extension
18	900-1501	Mount, Thermostat
19	900-7131	Support, Back
20	900-7270	Base, One-Piece GF14 Cabinet
21	900-7312	Brace, Cabinet Top
22	910-3207	Deflector, Flue Exhaust
23		Back, Cabinet
	900-7310SP	Enameled Steel
	910-7310SP	Stainless Steel
24		Side, Left Cabinet
	901-7311SP	Enameled Steel
	911-7311SP	Stainless Steel
25		Side, Right Cabinet
	902-7311SP	Enameled Steel
	912-7311SP	Stainless Steel
26	810-1422	Handle, Wireform Door
27	826-1379	Screw, #10 X ½-inch Phillips Truss Head (package of 10)

FRYPOT AND RELATED COMPONENTS

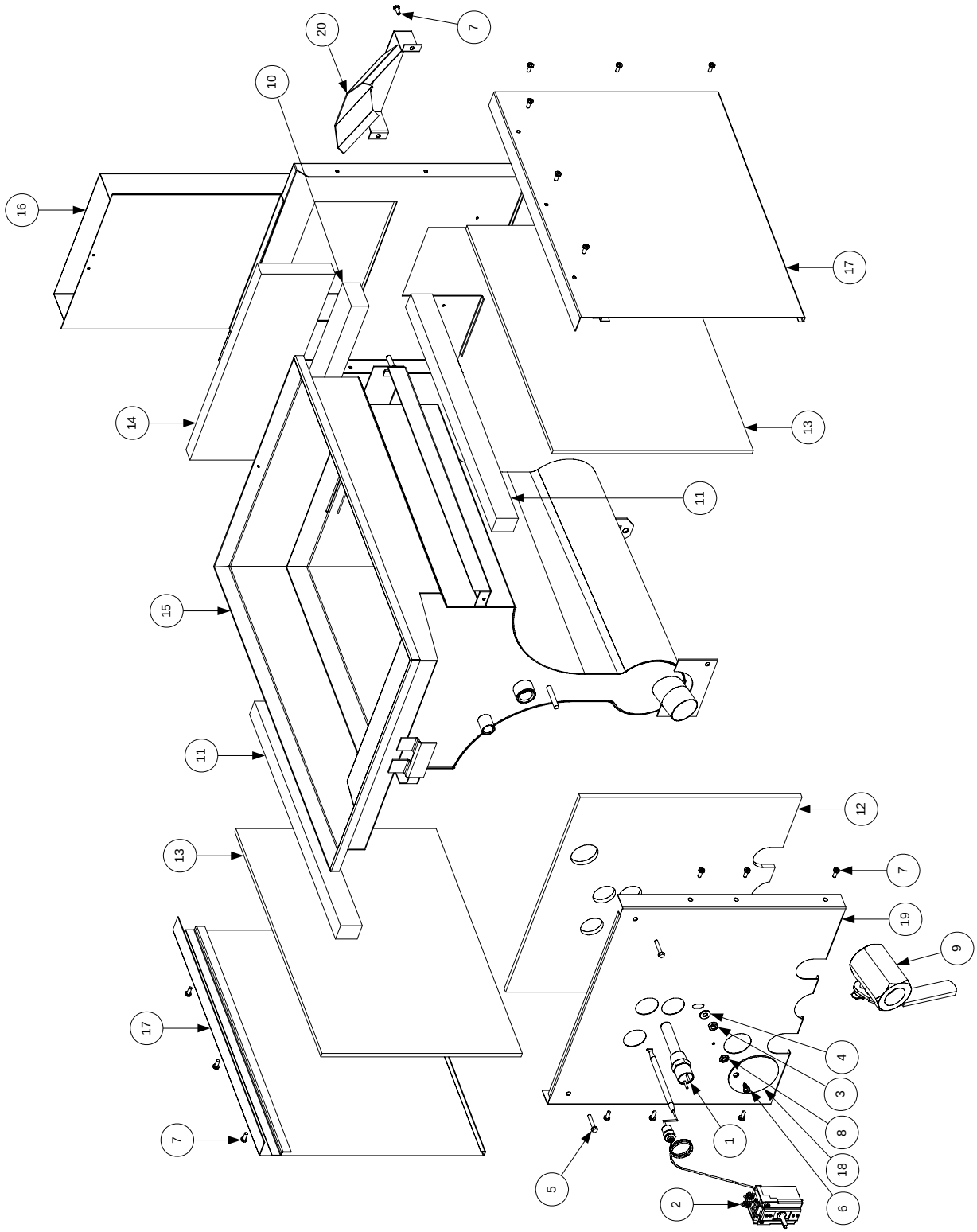

Item	Part #	Component
		Complete Replacement Frypot with Flue and Insulation Installed
	806-3958SP	Stainless Steel
	806-3959SP	Cold-Rolled Steel
	806-9710SP	Stainless Steel (for SYSCO fryers w/Fenwal thermostat only)
	806-4006	**Complete Front Combustion Chamber (Items 6, 8, 12, and 19)**
1	826-1177	Thermostat Assembly, High Limit
2	807-1692	Thermostat, Sunne Operating
*	816-0578	O-Ring, Thermostat Shaft
*	816-0139	Knob, Thermostat Control
*	806-7972	Thermostat, Fenwal Operating (for use in SYSCO fryers only)
3	826-1362	Nut, ¼-20 Hex (package of 10)
4	809-0190	Washer, ¼-inch Flat
5	809-0362	Screw, #8 X 1¼-inch Hex Washer Head Drill Point
6	809-0409	Screw, #10 X ½-inch Round Head One-way Security
7	809-0410	Screw, #8 X ½-inch Phillips Head Drill Point
8	810-0647	Holder, Security Screw
9	810-1569	Valve, 1.25-inch Drain
10	812-0169	Insulation, Banroc 12.00 X 1.75 X 1.00-inch
11	812-0170	Insulation, Banroc 16.88 X 1.25 X 1.00-inch
12	812-0481	Insulation, Front Combustion Chamber
13	812-0482	Insulation, Side Combustion Chamber
14	812-0483	Insulation, GF14 Frypot Rear
15		Replacement Frypot without Insulation
	826-1618	Stainless Steel
	826-1617	Cold-Rolled Steel
	823-2874SP	For use in SYSCO fryers using Fenwal operating thermostat only.
16	823-1024	Flue
17	823-1025	Side, Combustion Chamber
18	900-1090	Cover, Pilot Viewport
19	900-3860	Front, Combustion Chamber
20	910-2113	Target, GF14 Rear

* Not Illustrated.

GF14/GF40 SERIES GAS FRYERS
CHAPTER 3: GF40 PARTS LIST

ACCESSORIES

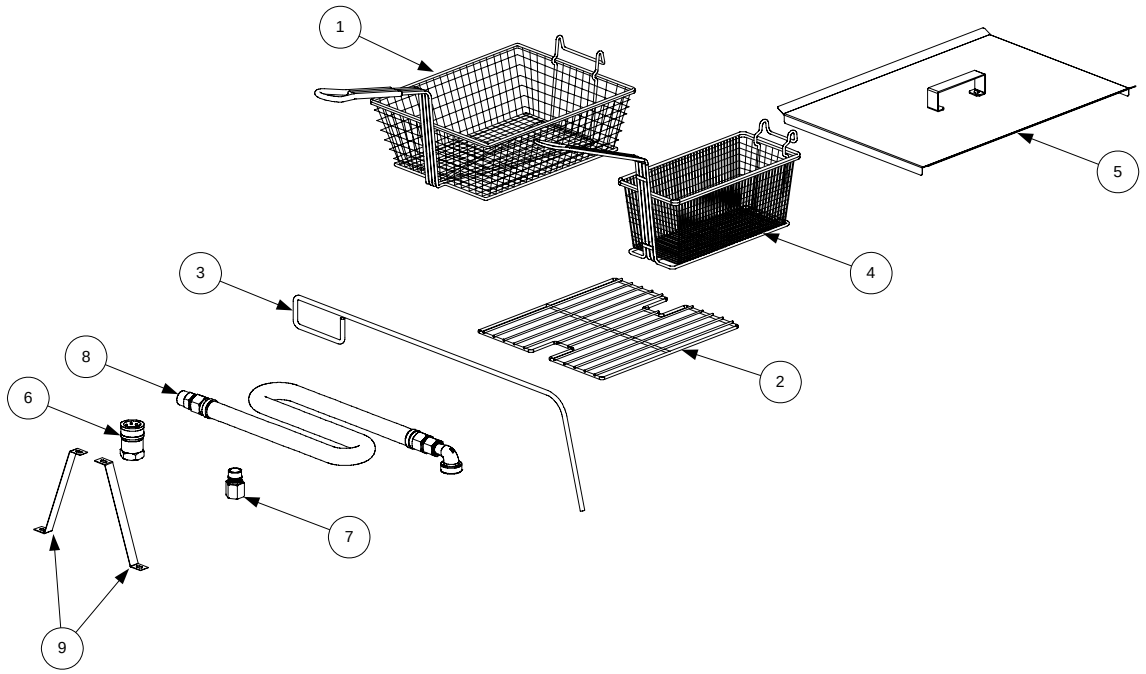

Item	Part #	Component
1	803-0099	Basket, Full
2	803-0132	Rack, Basket Support
3	803-0197	Cleanout Rod, 27-Inch
4	803-0271	Basket, Twin
5	806-5518	Cover, Frypot
*	910-7014	Cover, Spreader Cabinet
6		Quick-Disconnect Fitting, Female
	810-0070	¾-inch
	810-0073	1-inch
7		Quick-Disconnect Fitting, Male
	810-0072	¾-inch
	810-0074	1-inch
8		Hose, Flexible Gas
	810-0083	¾-inch x 36-inch
	810-0084	¾-inch x 48-inch
	810-0088	1-inch x 36-inch
	810-0085	1-inch x 48-inch
9	826-1095	Anchor Strap Kit (for use only on fryers equipped with legs)
*	826-0900	Chain Restraint Kit (for use only on fryers equipped with casters)
*	812-1226	Drain Extension

* Not illustrated.

BURNER AND GAS SUPPLY COMPONENTS

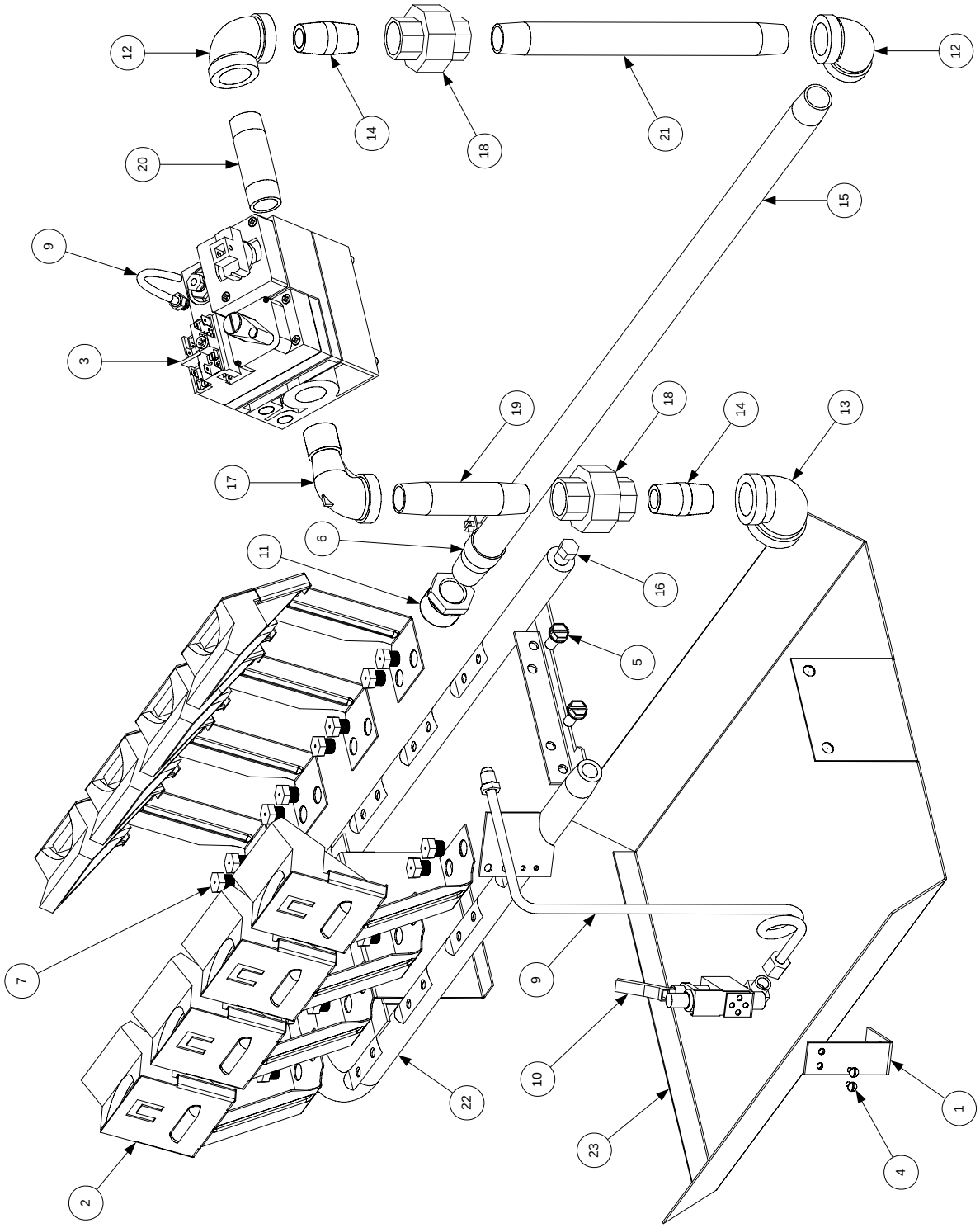

Item	Part #	Component
1	200-0749	Guard, Thermopile
2	806-0225SP	Deflector Assembly
3		Valve, Honeywell Millivolt Gas (See **NOTE 1**.)
	807-1603	Natural (See **NOTE 2**.)
	807-1604	Propane (See **NOTE 2**.)
4	809-0092	Screw, 5-40 x ¼-inch Slotted Pan Head
*	809-0115	Screw. #10-32 x ¼-inch Truss Head (attaches Item 10 to Item 22)
5	809-0785	Screw, #14 x ¾-inch Slotted Hex Washer Head
6	809-0951	Clamp, Hose
7		Orifice
	826-1357	1.45 mm (for natural gas, 0-1999 feet/0-609 meters) (package of 10)
	826-1386	1.40 mm (for natural gas, 2000-3999 feet/610-1219 meters) (pkg of 10)
	810-0361	1.36 mm (for natural gas, 4000-5999 feet/1220-1829 meters)
	810-0131	1.30 mm (for natural gas, 6000-7999 feet/1830-2438 meters)
	810-0951	1.25 mm (for natural gas, 8000-8999 feet/2439-2743 meters)
	810-0323	1.20 mm (for natural gas, 9000-9999 feet/2744-3048 meters)
	826-1387	0.86 mm (for Propane gas, 0-1999 feet/0-609 meters) (package of 10)
	810-0952	0.82 mm (for Propane gas, 2000-3999/610-1219 meters)
	826-1352	0.81 mm (for Propane gas, 4000-5999 feet/1220-1829 meters) (pkg of 10)
	812-0914	0.78 mm (for Propane gas, 6000-7999 feet/1830-2438 meters)
	812-1302	0.76 mm (for Propane gas, 8000-8999 feet/2439-2743 meters)
	812-0444	0.74 mm (for Propane gas, 9000-9999 feet/2743-3048 meters)
8	810-0691	Tube, Gas Valve Vent
9	810-0705	Gas Line, .25-inch x 23.00-inch
10		Pilot Assembly (Includes bracket, hood, and thermopile. See **NOTE 3**.)
	810-1830	Natural Gas w/.024-inch Right Angle Orifice 810-0149
	810-1773	Propane Gas w/.013-inch Right Angle Orifice 810-0148
11	813-0031	Bushing, ¾-inch x ½-inch BM NPT Reducer
12	813-0062	Elbow, ½-inch x 90° BM NPT
13	813-0068	Elbow, ¾-inch x ½-inch BM NPT Reducer
14	813-0087	Nipple, ½-inch x 1.50-inch BM NPT
15	813-0108	Nipple, ½-inch x 24.50-inch BM NPT
16	813-0154	Plug, ⅛-inch Hex Head Pipe
17	813-0165	Elbow, ½-inch x 90° BM NPT Street
18	813-0173	Union, ½-inch BM NPT
19	813-0247	Nipple, ½-inch x 3.50-inch BM NPT
20	813-0265	Nipple, ½-inch x 2.50-inch BM NPT
21	813-0320	Nipple, ½-inch x 8.00-inch BM NPT
22	823-0496	Manifold, Burner
23	823-0574	Shield, Open Burner Heat

* Not illustrated.

NOTE 1: For gas valve knob only, use P/N 810-0975.

NOTE 2: Use kit 826-1143 to convert valve from natural gas to Propane; use kit 826-1144 to convert from Propane to natural gas. Kits also include appropriate pilot orifices.

NOTE 3: For Pilot only, order P/Ns 810-0426 (Natural) or 810-0427 (Propane). For Thermopile only, order P/N 810-1873.

CABINETRY COMPONENTS

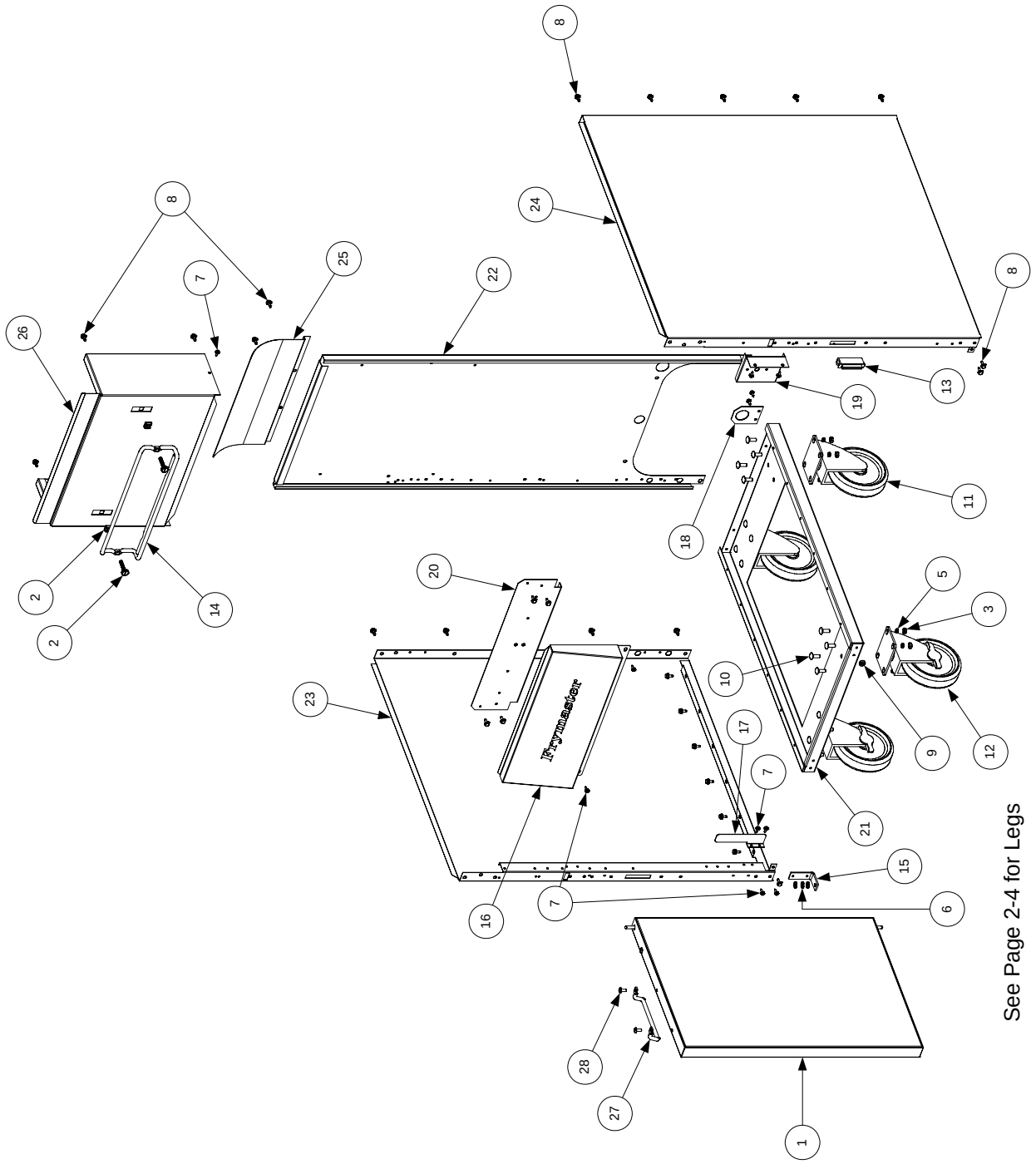

See Page 2-4 for Legs

Item	Part #	Component
1	806-8396	Door Assembly
2	826-1351	Retainer, Nut (Nutsert) (package of 10)
3	826-1362	Nut, ¼-20 Hex (package of 10)
4	809-0171	Thumbscrew, ¼-20 x 1⅜-inch
5	809-0191	Washer, ¼-inch Lock
6	809-0193	Washer, ¼-inch Nylon Flat
7	826-1371	Screw, #8 X ½-inch Hex Head Drill Point (package of 25)
8	826-1374	Screw, #10 X ½-inch Hex Head (package of 25)
9	809-0413	Spacer, ¼-inch X .160-inch 8 Gauge Nylon
10	809-0563	Bolt, ¼-20 X ¾-inch Carriage
11	810-0356	Caster w/o Brake, 5” Wheel
12	810-0357	Caster w/Brake, 5” Wheel
13	810-1105	Magnet, Offset Door
14	810-1403	Hanger, Wireform Basket (for old-style extruded aluminum use 803-0028)
15	810-1508	Hinge, Universal Door
16	824-0330	Panel, GF14/GF40 Control
17	900-0943	Bracket, Drain Extension
18	900-1129	Support, Gas Line
19	900-1501	Mount, Thermostat
20	900-4274	Brace, GF40 Cabinet Top
21	900-5764	Base, One-Piece GF40 Cabinet
22		Back, Cabinet
	900-6983SP	Enameled Steel
	910-6983SP	Stainless Steel
23		Side, Left Cabinet
	901-7311SP	Enameled Steel
	911-7311SP	Stainless Steel
24		Side, Right Cabinet
	902-7311SP	Enameled Steel
	912-7311SP	Stainless Steel
25	910-3557	Deflector, GF40 Flue
26	910-5038	Cap, Flue
27	810-1422	Handle, Wireform Door
28	826-1379	Screw, #10 X ½-inch Phillips Truss Head (package of 10)

FRYPOT AND RELATED COMPONENTS

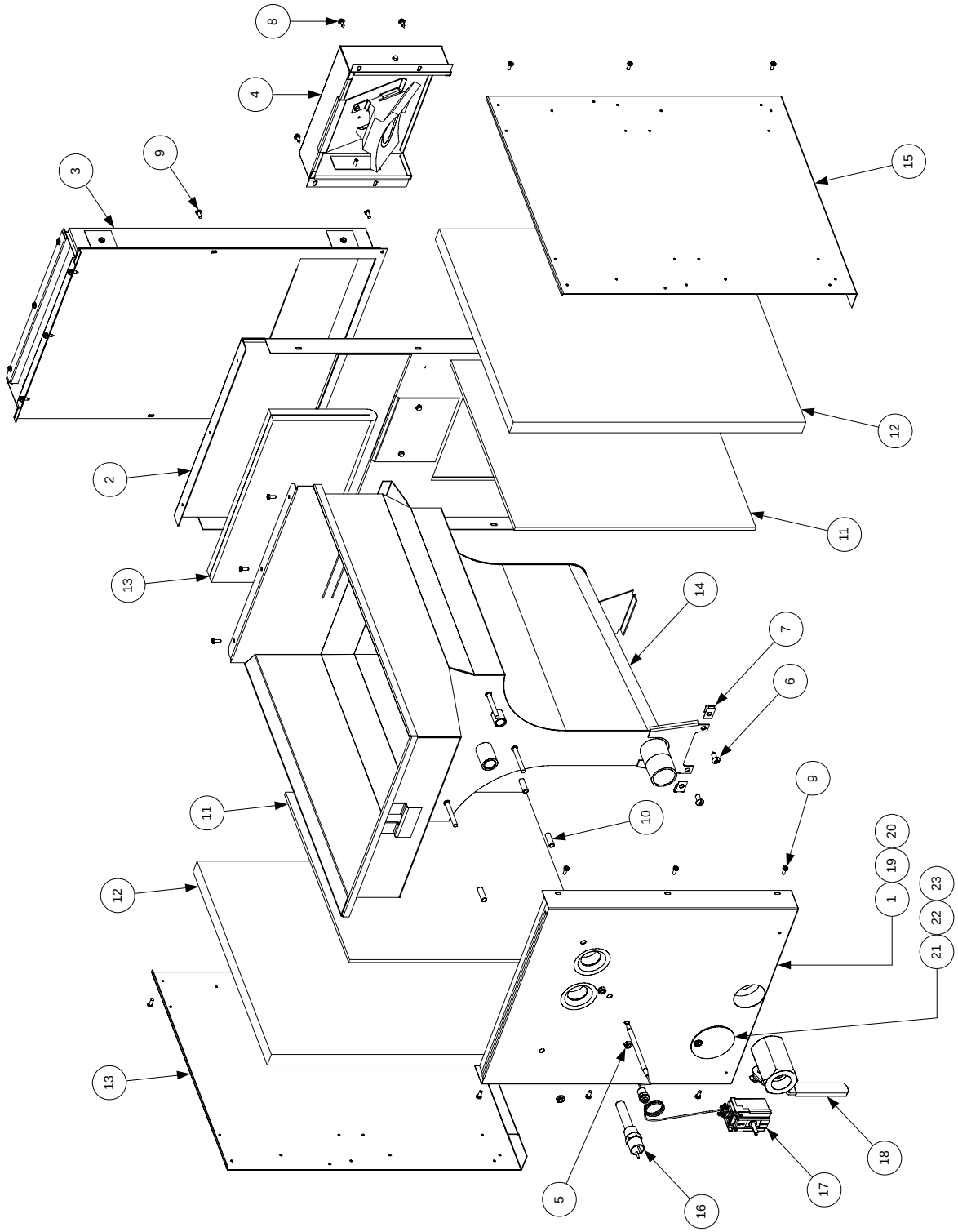

Item	Part #	Component
		Complete Replacement Frypot with Flue and Insulation Installed
	106-1679SP	Stainless Steel
	806-4199SP	Cold-Rolled Steel
	806-4308SP	**Complete Front Combustion Chamber (Items 1 and 19 through 23)**
1	900-6969	Baffle, Front Insulation
2	806-5566	Panel Assembly, Rear Combustion Chamber
3	806-5567SP	Flue Assembly with Insulation, Complete
*	816-0174	Insulation, Flue Back
*	816-0175	Insulation, Flue Front
4	806-5778SP	Box Assembly, Flue Deflector
5	826-1362	Nut, ¼-20 Hex (package of 10)
6	809-0170	Screw, #14 X ¾-inch Slotted Pan Head
7	809-0173	Clip, Tinnerman
8	826-1371	Screw, #8 X ½-inch Hex Head Drill Point (package of 25)
9	809-0410	Screw, #8 X ½-inch Phillips Head Drill Point
10	810-0500	Spacer, ¼-inch X 15/16-inch
11	812-0248	Insulation, Kaowool M-Board 14.50 X15.93 X 0.25-inch
12	812-0249	Insulation, Spinglas 16.75 X 19.38 X 1.00-inch
13	812-0269	Insulation, Kaowool Blanket 14.00 X 14.00 X 0.50-inch
14		Replacement Frypot without Insulation
	823-3470SP	Stainless Steel
	823-1233SP	Cold-Rolled Steel
15	900-6441	Side, Combustion Chamber
16	806-7546	Thermostat Assembly, High Limit
17	826-1809	Thermostat, Sunne Operating
*	816-0578	O-Ring, Thermostat Shaft
*	816-0139	Knob, Thermostat Control
18	810-1569	Valve, 1.25-inch Drain
19	812-0246	Insulation, Spinglas 15.00 X 16.37 X 1.00-inch
20	812-0245	Insulation, Kaowool M-Board 15.00 X 16.37 X 0.25-inch
21	900-1090	Cover, Pilot Viewport
22	810-0647	Holder, Security Screw
23	809-0409	Screw, #10 X ½-inch Round Head One-way Security

* Not Illustrated.

THIS PAGE INTENTIONALLY LEFT BLANK

Shipping Address: 8700 Line Avenue, Shreveport, Louisiana 71106

TEL 1-318-865-1711 FAX (Parts) 1-318-219-7140 FAX (Tech Support) 1-318-219-7135

PRINTED IN THE UNITED STATES

SERVICE HOTLINE
1-800-551-8633

819-5888
APRIL 2009

Commercial Kitchen Equipment Parts

Find more Frymaster equipment resources at

parthubz.com/equipment/frymaster

Need parts or service?

Call 833-700-8006

support@parthubz.com

parthubz.com