Commercial Kitchen Equipment Parts

FRYMASTER GPC

Frymaster GPC Parts Diagram

Provided by PartHubz

parthubz.com

833-700-8006 | support@parthubz.com

Pasta Magic

Gas Cooker Models

GPC, GPCB, GPCR and GPCRB

Service and Parts Manual

Frymaster

Frymaster, a member of the Commercial Food Equipment Service Association, recommends using CFESA Certified Technicians.

24-Hour Service Hotline
1-800-551-8633

JAN 2013

8 1 9 6 6 9 2

⚠ DANGER

IMPROPER INSTALLATION, ADJUSTMENT, ALTERATION, SERVICE, OR MAINTENANCE CAN CAUSE PROPERTY DAMAGE, INJURY, OR DEATH. READ THE INSTALLATION, OPERATING, AND SERVICE INSTRUCTIONS THOROUGHLY BEFORE INSTALLING OR SERVICING THIS EQUIPMENT.

⚠ DANGER

FOR YOUR SAFETY, DO NOT STORE OR USE GASOLINE OR OTHER FLAMMABLE LIQUIDS OR VAPORS IN THE VICINITY OF THIS OR ANY OTHER APPLIANCE.

⚠ DANGER

POST IN A PROMINENT LOCATION THE INSTRUCTIONS TO BE FOLLOWED IN THE EVENT THE USER SMELLS GAS. THIS INFORMATION SHALL BE OBTAINED BY CONSULTING THE LOCAL GAS SUPPLIER.

THIS EQUIPMENT IS TO BE INSTALLED IN COMPLIANCE WITH THE BASIC PLUMBING CODE OF THE BUILDING OFFICIALS AND CODE ADMINISTRATORS INTERNATIONAL, INC. (BOCA) AND THE FOOD SERVICE SANITATION MANUAL OF THE FOOD AND DRUG ADMINISTRATION.

COMPUTERS

FCC

This device complies with Part 15 of the FCC rules. Operation is subject to the following two conditions: 1) This device may not cause harmful interference, and 2) This device must accept any interference received, including interference that may cause undesired operation. While this device is a verified Class A device, it has been shown to meet the Class B limits.

CANADA

This digital apparatus does not exceed the Class A or B limits for radio noise emissions as set out by the ICES-003 standard of the Canadian Department of Communications.

Cet appareil numerique n'emet pas de bruits radioelectriques depassany les limites de classe A et B prescrites dans la norme NMB-003 edictee par le Ministre des Communcations du Canada.

⚠ DANGER

THIS PRODUCT CONTAINS CHEMICALS KNOWN TO THE STATE OF CALIFORNIA TO CAUSE CANCER AND/OR BIRTH DEFECTS OR OTHER REPRODUCTIVE HARM.
Operation, installation, and servicing of this product could expose you to airborne particles of glasswool or ceramic fibers, crystalline silica, and/or carbon monoxide. Inhalation of airborne particles of glasswool or ceramic fibers is known to the State of California to cause cancer. Inhalation of carbon monoxide is known to the State of California to cause birth defects or other reproductive harm.

FRYMASTER FRYERS EQUIPPED WITH LEGS ARE FOR PERMANENT INSTALLATION. FOR MOVEABLE OR PORTABLE INSTALLATION, FRYMASTER OPTIONAL EQUIPMENT CASTERS MUST BE USED.
QUESTIONS??? CALL 1-800-551-8633.

Do not use deliming solution to clean water bath units. Use of deliming solution will damage all stainless steel parts.

GAS COOKERS GPC, GPCB, GPCR and GPCRB
SERVICE & PARTS MANUAL
TABLE OF CONTENTS

CHAPTER 1: Service Procedures

1.1 Functional Description 1-1
1.2 Accessing Equipment for Servicing 1-4
1.3 Replacing Equipment Components 1-4
1.3.1 Replacing the Controller 1-4
1.3.2 Replacing Electronic Components Other than the Controller 1-4
1.3.3 Replacing a Water-Level Sensor or the Temperature Probe 1-5
1.3.4 Replacing the Pressure Regulator or Solenoid Valve 1-6
1.3.5 Replacing the Water Faucet 1-7
1.3.6 Replacing a Basket Lift Motor or Microswitch 1-7
1.3.7 Replacing Gas Supply System Components or Ignitor Assemblies 1-8
1.3.8 Replacing the Cookpot or Rinse Tank 1-10
1.4 Troubleshooting 1-11
1.4.1 How the Power Supply System Works 1-11
1.4.2 How the Controller Works 1-11
1.4.3 How the Autofill/Autoskim System Works 1-11
1.4.4 How the Water Heating System Works 1-12
1.4.5 How the Basket Lift System Works 1-13
1.4.6 Technician Troubleshooting Guides 1-13
1.4.7 Probe Resistance Chart and Wiring Diagrams 1-17

CHAPTER 2: Parts List

2.1 Accessories 2-1
2.2 Basket Lift Components 2-2
2.3 Cabinetry 2-4
2.4 Combustion System Components 2-8
2.5 Control Box and Related Components 2-10
2.6 Controllers and Control Panel Components 2-12
2.7 Cookpot, Rinse Tank and Associated Components 2-13
2.8 Drain Components 2-15
2.9 Gas Supply System Components 2-17
2.10 Water Supply Components 2-19

GAS COOKERS GPC, GPCB, GPCR AND GPCRB
SERVICE AND PARTS
CHAPTER 1: SERVICE PROCEDURES

1.1 Functional Description

The GPC, GPCB, GPCR and GPCRB Gas Cookers all have a 12.7-gallon (48.1-liter) stainless steel cookpot. The water in the cookpot is heated by a high-efficiency infrared heating system that requires approximately 43% less energy than conventional burner systems to heat the same volume of water.

Two self-contained burners are located beneath the cookpot. Each burner is fitted with special ceramic tiles that are heated by the burning of a forced air/gas mixture. The tiles transfer their heat to the cookpot by means of infrared radiation, providing much more constant and uniform heat dispersion over the surface of the cookpot than do conventional burners. Because relatively less heat is lost to the atmosphere in the process, compared to "open-burner" designs, less fuel is required to achieve and maintain a given cookpot temperature.

Gas flow to both of the burners is regulated by one electromechanical gas valve.

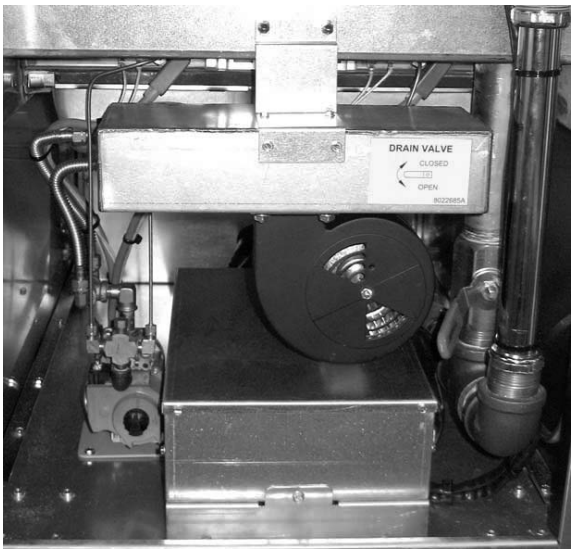

Inside GPC Cabinet

Model	Description
GPC	Cooker only, auto fill/skim, programmable timer
GPCR	Separate rinse tank, auto fill/skim, hot/cold water inlets, programmable timer, faucet
GPCRB	Automatic basket lift, separate rinse tank, auto fill/skim, hot/cold water inlets, programmable timer, faucet
GPCB	Automatic basket lifts, auto fill/skim, programmable timer

Operational control of the burner system is accomplished through a solid-state SMS III *Spaghetti Magic* controller. **NOTE:** The SMS III controller used in this model series is identical in appearance to the SMS III controllers used in other model series, but differs internally. *Use only the part numbers listed in Chapter 2 when replacing controllers on this equipment.*

SMS III Controller

The GPC, GPCB, GPCR and GPCRB controllers do not have a ten-time warm up cycle as previous models did, but instead use a Fenwal ignition module (807-4943). The module will try to light for four seconds. If unsuccessful, the blower will remain on for 15 seconds and try again. Once the burner is lit and the flame is proved, the module ends the lighting sequence. If the flame is not proved after eight tries, the module will lock out.

When the controller power switch is pressed, a logic circuit in the controller automatically checks the water level in the cookpot. A normally closed solenoid valve on the water supply line automatically opens if the normal water-level sensor is not grounded by contact with water in the cookpot. When sufficient water has been added to ground the low water-level sensor, the unit automatically enters the **SIMMER** mode and remains there unless the operator presses the **BOIL** mode switch or turns the unit off. When the water level in the cookpot reaches and grounds the normal water-level sensor, the solenoid valve in the water supply line closes. Anytime the water level in the cookpot drops below the normal water-level sensor, the solenoid valve opens to refill the cookpot to the proper level.

While in the simmer mode, logic circuits in the controller monitor the temperature of the water and cycle the burners on and off to maintain the temperature at the setpoint programmed into the controller. The cooker also has a low-water safety. If the water in the cookpot falls below the low water-level sensor, the controller cuts power to the gas valve, causing it to close and cut off the gas supply to the burners.

The autoskim and skim features are independent of each other. The autoskim feature (on units so equipped) cannot be turned off. The autoskim feature adds water for approximately three seconds once a minute.

The skim feature, when activated by pressing the skim button on the controller, delivers a continuous spray of water for approximately two minutes, then stops until the button is again pressed. In both cases, the purpose is to cause the water in the cookpot to overflow into the drain, carrying floating starch with it. (A buildup of starch reduces the efficiency of the cooker and can cause erroneous temperature and water level sensing.) **NOTE: Do not use deliming solution to clean these units. Use of deliming solution will damage all stainless steel parts.)**

The operator enters a specified cooking time by pressing the number pads on the controller. When the start switch is pressed, the controller begins to count down to zero. When the controller times out, an alarm sounds briefly, then the timer reverts to the last time entered.

When the start switch is pressed to start the cooking cycle, logic circuits in the controller activate the basket lift motors (on units so equipped), lowering the basket into the cookpot. As the motors drive

the basket lift arms down, a cam attached to the left motor eventually loses contact with a roller-activated microswitch and power to the motors are cut. When the controller times out, logic circuits reverse the switch positions so that the motor circuit is again completed and the motors are restarted, raising the basket from the cookpot. At the fully raised position, the cam again makes contact with the microswitch, cutting power to the motors and stopping the lift in the up position.

THE ELECTRONIC IGNITION SYSTEM

The ignition module, located in the component box, is connected to ignitor assemblies at each burner. The ignition module performs three important functions: it provides an ignition spark, supplies operating voltage to the gas valve, and proofs the burner flame. The GPC series use a Fenwal ignition module.

The ignition module contains a 4-second time delay circuit and a coil that activates the gas valve. The ignitor assembly consists of a spark plug, an enrichment tube, and flame sensor.

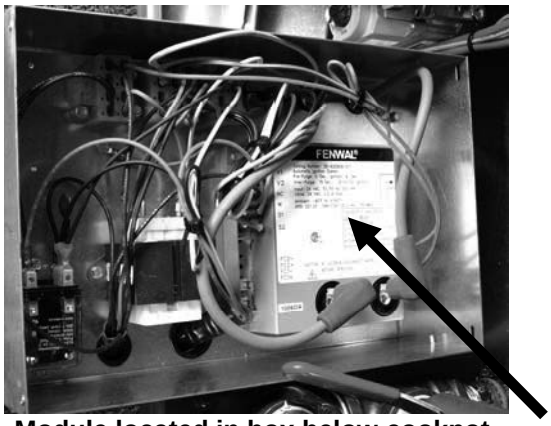

Module located in box below cookpot.

At start-up, the controller power switch is placed in the ON position. If the controller senses the correct operating parameters (i.e., the correct water level in the cookpot), it sends a signal to the 24VAC relay in the component box to close the blower contacts. This supplies line voltage to the blower motor. A centrifugal switch in the blower closes if the blower is operating correctly, which allows 24VAC to flow through the closed contacts of the 24VAC relay to the ignition module.

Circuitry in the ignition modules sends 24VAC to the gas valve. Simultaneously, the module causes the ignitors to spark for 4 seconds to light the burners. A flame sensor for each burner verifies that the burner is lit by measuring the flow of microamps through the flame. If the burner does not light (or is extinguished), current to the ignition module is cut, preventing the gas valve from opening, and the ignition module “locks out” until the controller power switch is turned off and then back on.

A probe monitors the temperature in the cookpot. When the programmed setpoint temperature is reached, resistance in the probe causes the heat cycle circuitry in the controller to cut off current to the 24VAC relay, thus cutting line voltage to the blower. This cuts the 24VAC to the ignition module, causing the gas valve to close.

1.2 Accessing Equipment for Servicing

⚠ DANGER
Moving this equipment while it is filled with hot water may cause spilling or splattering of the hot water. Always drain the cookpot before attempting to relocate this equipment for servicing.

1. Disconnect the unit from the electrical power supply, the gas supply and the water supply.
2. Disconnect any attached restraining devices.
3. Relocate the unit for service accessibility.
4. After servicing is complete, reconnect the unit to the water supply and the gas supply. Reattach the restraining devices, and reconnect the unit to the electrical power supply.

1.3 Replacing Equipment Components

1.3.1 Replacing the Controller

1. Open the control panel by removing the two screws on the bottom of the bezel. Disconnect the trouble light wires and lower the bezel. Remove the two screws in the upper edge of the controller and lower the controller and disconnect the 15-pin connector and ground wire. Remove the control panel by lifting the panel out of the slots in the control panel frame.
2. Remove the failed controller from the control panel and replace with the new controller. Reverse steps to complete the process.

1.3.2 Replacing Electronic Components Other than the Controller

1. Drain the cookpot and disconnect the cooker form the electrical power supply.
2. The control box is mounted inside the bottom of the cabinet located beneath the cookpot.

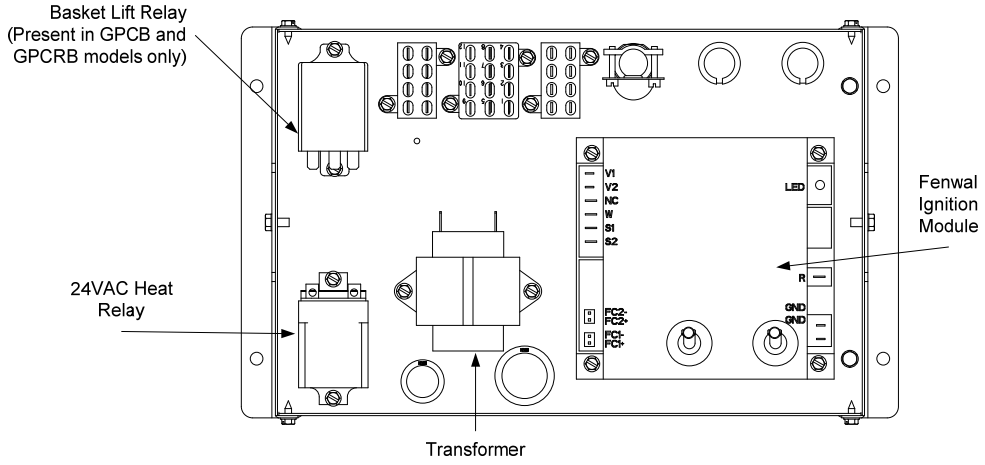

3. On the component to be replaced, make a note of the wiring connection points. Disconnect the wires and remove the failed component. Install the replacement component and reconnect the wiring in accordance with the notes made, or with the wiring diagram on the door of the unit.
4. Replace the component box cover, and reinstall the controller being sure to reconnect the ground wire and trouble light wires. Reconnect the cooker to the electrical power supply.

1.3.3 Replacing a Water-Level Sensor or the Temperature Probe

1. Drain the cookpot and disconnect the cooker from the electrical power supply.

2. Remove the screws in the upper edge of the control panel and swing the panel down. Disconnect the 15-pin connector, trouble light wires, and ground wire, and lift the panel out of the slots in the control panel frame.

3. Remove the topcap from the unit by removing the four screws (two on the front and two on each end) that secure it to the cabinet.

4. Remove the control panel frame by removing the screws in the top and bottom corners and the screw in the center bracket.

5. If replacing a water-level sensor (see illustration below):

   a. Disconnect the sensor lead by pulling it from its terminal then remove the Keps nut, terminal, and washer from the sensor.
   b. Inside the cookpot, remove the screw from the sensor flange.
   c. Carefully pull the failed sensor from the probe block and replace with the new sensor.
   d. Reassemble the washer, terminal, and nut onto the sensor, and reattach the lead.
   e. Reverse Steps 1-4 to complete the procedure.

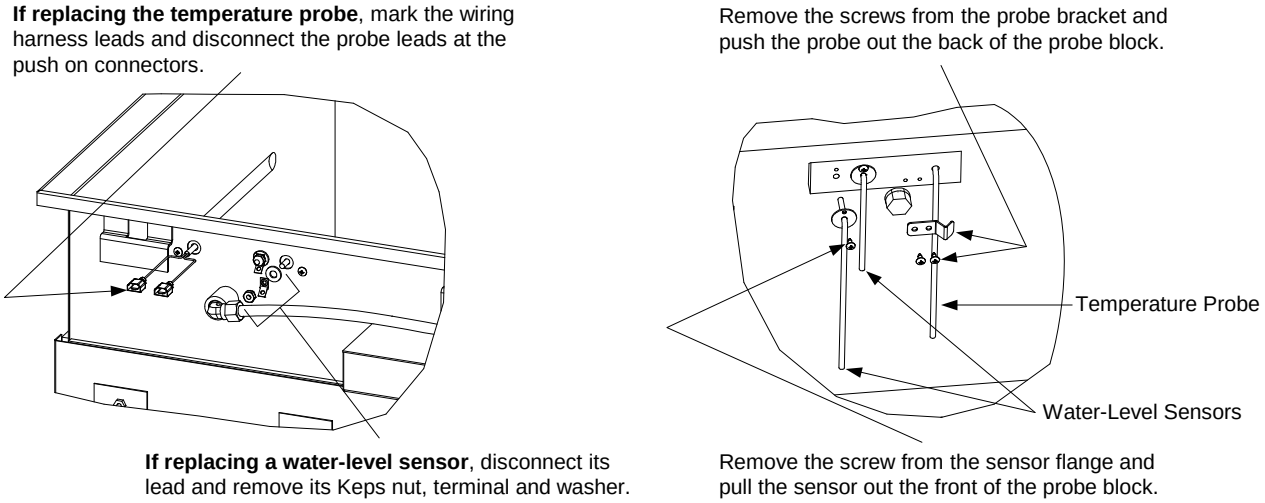

6. If replacing the temperature probe (see illustration above):

   a. Mark the wiring harness leads and disconnect them from the probe leads at the push-on connectors.
   b. Remove the two screws in the probe bracket.
   c. Carefully pull the probe from the probe block and replace with the new probe.
   d. Reattach the leads and reverse Steps 1-4 to complete the procedure.

1.3.4 Replacing the Pressure Regulator or Solenoid Valve

1. Drain the cookpot and disconnect the cooker from the electrical power supply. Turn off or disconnect the water supply to the cooker.

2. Disconnect the solenoid leads at the push-on connectors. Disconnect solenoid and regulator subassembly at the compression fittings on the water lines running to and from these components. Remove the two screws in the mounting bracket and remove the solenoid and regulator subassembly from the unit. (**NOTE**: If the cooker is not equipped with the optional Autofill feature, the cookpot water tube will be connected directly to the regulator and there will be no solenoid valve.)

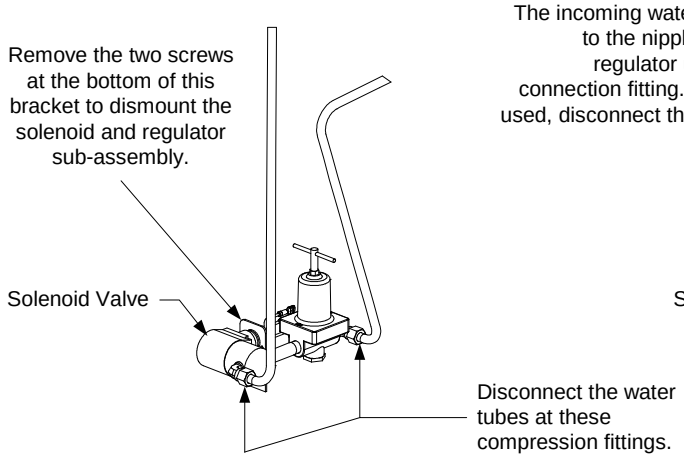

GSMS with Autofill Configuration

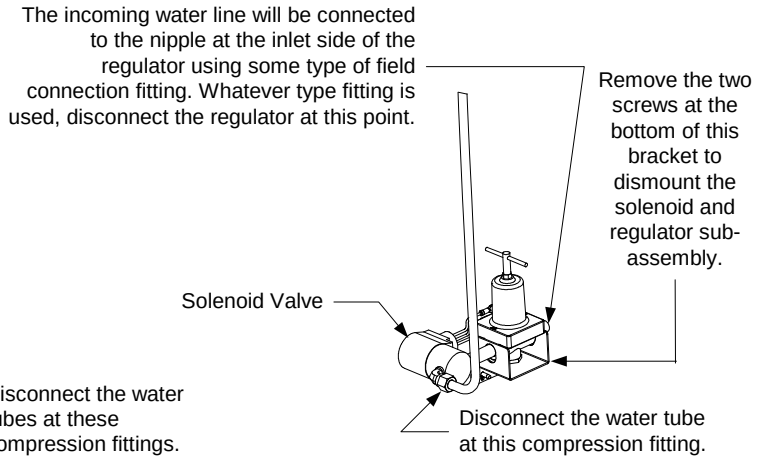

GBC/GC with Autofill Configuration

3. If replacing the regulator, adjust the replacement regulator output pressure to not more than 40 PSI (28.15 kg/cm^2) before installation in the cooker.

4. Recover the fittings from the failed component (regulator or solenoid valve) and install them on the replacement, using thread sealer on all connections.

5. Reverse Steps 1 and 2 to complete the procedure, being sure to apply thread sealer to all connections.

1.3.5 Replacing the Water Faucet

1. Drain the cookpot and disconnect the cooker from the electrical power supply.

NOTE: Refer to the illustration below for the following steps.

2. Turn off the water supply to the cooker and disconnect the incoming water lines where they attach to the stubs at the rear of the cooker.

3. Remove the two screws securing the access panel in place and remove the panel.

4. Disconnect the water supply line at the compression fitting where it attaches to the water inlet manifold. Remove the screws from the faucet mounting plate and lift the faucet assembly from the unit.

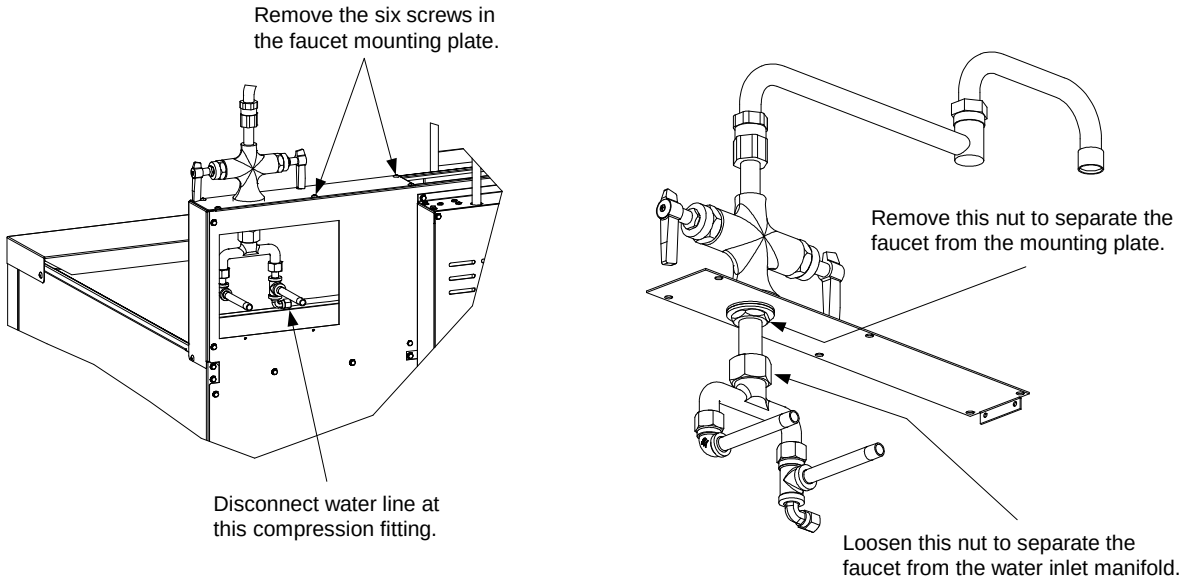

5. Separate the faucet from the water inlet manifold and mounting plate as shown in the illustration above.

6. Reverse Steps 1-5 to complete the procedure.

1.3.6 Replacing a Basket Lift Motor or Microswitch

1. Disconnect the cooker from the electrical power supply.

2. If rigid water connections have been used, disconnect the cooker from the incoming water supply.

3. Remove the basket lift arms from the lifter rods and then reposition the cooker to gain access to the rear. Remove the upper and lower basket lift rear panels.

4. Disconnect the basket lift synchronizer link from the lifter cam (bell crank) assemblies one at a time. When the link is disconnected from a cam, slip the corresponding lifter rod down and out of the assembly (see illustration on below).

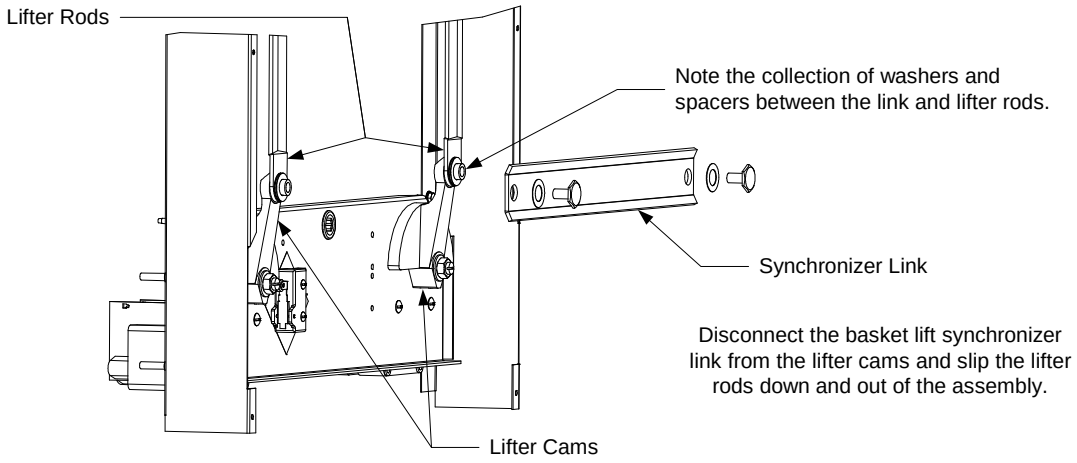

5. Remove the four bolts securing the motor mount to the frame, then remove the "motor and mount assembly" from the unit. **NOTE:** It is possible to replace a motor or the microswitch without removing the "motor and mount assembly", but it is much more difficult.

6. Dismount the motor or microswitch as shown below and install the replacement.

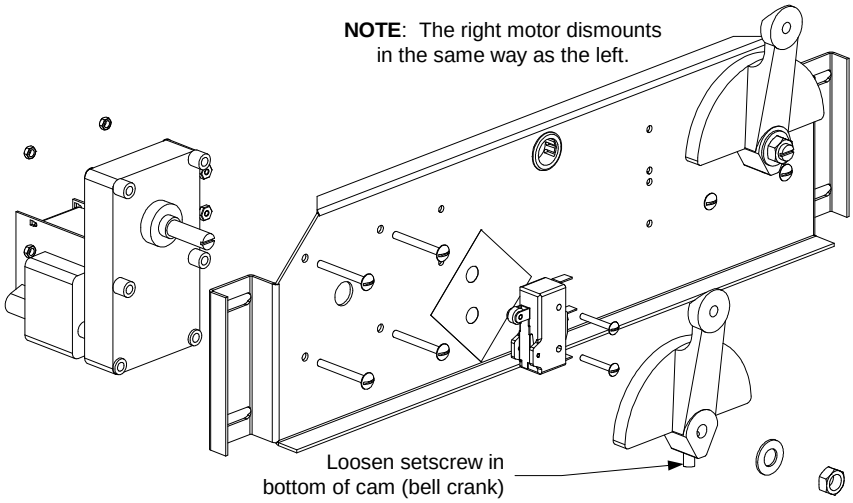

7. Reverse Steps 1-6 to complete the procedure.

1.3.7 Replacing Gas Supply System Components or Ignitor Assemblies

1. Disconnect the cooker from the electrical power supply and from the gas supply. If necessary, disconnect restraints to gain proper access to components.

2. Disconnect the component to be replaced (see illustration below) and install the replacement component. **NOTE:** If replacing the gas valve, disconnect the enrichment tubes and gas supply tubes at the valve, then unscrew the valve from the mounting bracket. Recover the fittings from the failed valve and install them on the replacement valve using a thread sealer suitable for gas appliances (Loctite™ PST 56765 is one example). Do not apply the sealer to the first two threads of the fitting. This will help prevent clogging of the burner orifices and gas valve.

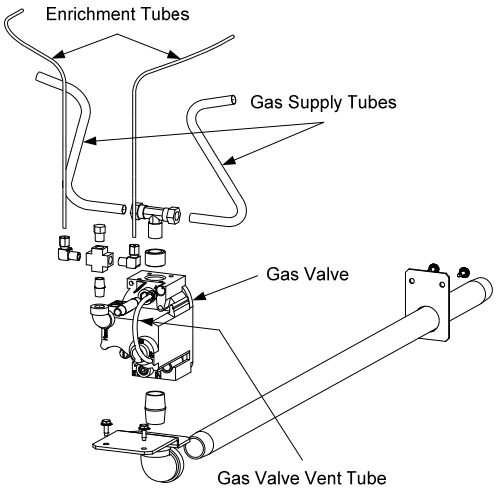

Burners

Blower and plenum removed

3. Reconnect the cooker to the gas supply and check all connections for leaks using a solution of soapy water.

> ⚠ **DANGER**
> **DO NOT use matches, candles, or other ignition methods to check for leaks.**

4. When satisfied that there are no leaks, reconnect the unit to the electrical supply, and reconnect any restraints disconnected in Step 1.

1.3.8 Replacing the Cookpot or Rinse Tank

NOTE: The following procedure addresses removing the cookpot or rinse tank from a GPC unit. The procedure is essentially the same for a GPC, GPCB, GPCR and GPCRB units, except that there is no faucet on the GC, GPC or GPCB units. There are no basket lifts on the GC and GPC units.

1. Remove the basket lift arms from the lifter rods.

2. Remove the faucet assembly from the cooker in accordance with Steps 1-4 of Section 1.3.5.

3. Remove the screws that secure each of the rear corners of the backsplash assembly (see illustration at right). **NOTE:** To access the screw in the lower right corner (as viewed from the rear) the upper basket lift back panel must be removed.

4. Remove the screws along the top edge of the control panel and open the panel by swinging it downward. Disconnect the 15-pin connector from the rear of the controller and the wires attached to the trouble light, and then lift the control panel out of the control panel frame.

5. Remove the screws that secure the backsplash sides to the cabinet sides then remove the four screws that secure the topcap to the cabinet.

6. Remove the top connecting strip.

7. Remove the screws attaching the standoff brackets to the cookpot or rinse tank.

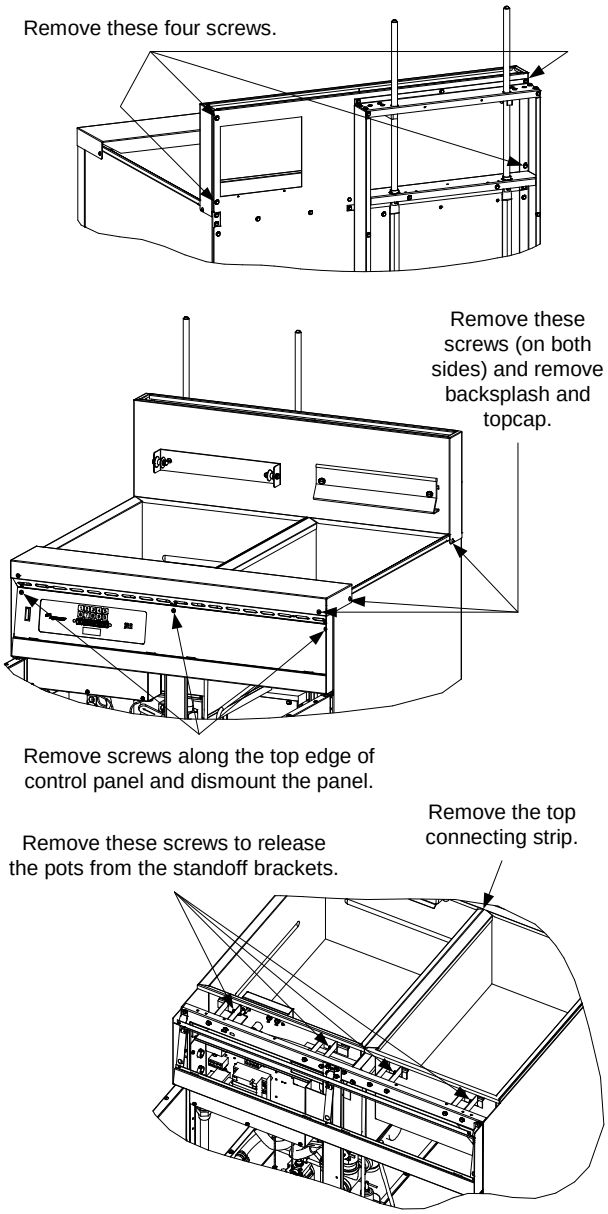

8. If removing the cookpot, disconnect the enrichment tubes and gas supply tubes from the burner assemblies. Disconnect the ignition cables and flame sensor wires from the ignitor assemblies on each burner.

9. Remove the blower.

10. Lift the cookpot or rinse tank straight up and out of the cabinet.

11. Invert the cookpot or rinse tank on a suitable work surface and remove the salvageable components (e.g., probe block assembly, drain plumbing, etc.). Install the recovered components on the replacement cookpot or rinse tank, using thread sealer on all connections.

12. Reverse Steps 1 through 9 to complete the procedure.

1.4 Troubleshooting

Problems with this equipment maybe grouped into five broad categories:

1. Failure or malfunction of a Power-Supply System component.
2. Failure or malfunction of the Controller.
3. Failure or malfunction of an Autofill/Autoskim System component.
4. Failure or malfunction of a Water Heating System component.
5. Failure or malfunction of a Basket Lift System component.

Sections 1.4.1 through 1.4.5 briefly explain the functioning of each of the systems mentioned above. Section 1.4.6 contains troubleshooting guides that provide systematic procedures to isolate and identify the specific source of a problem. A wiring diagram is located at the end of the chapter.

1.4.1 How the Power-Supply System Works

Line voltage is supplied to the system via a power cord that is plugged or hard-wired into the store's electrical service. The power cord is connected to pins 1 and 5 of an 8-pin terminal block. Line voltage is supplied to a 24VAC transformer from pins 2 and 8 of the terminal block. Pin 7 supplies 24VAC to a heat relay, which controls line voltage to the blower motor and 24VAC to the gas valve via the ignition module. The transformer supplies 24VAC to the controller, to the coils of the 24VAC relay, and to the solenoid valve on units equipped with the Autofill option. On units equipped with basket lifts, line voltage is supplied to a 24VDC basket lift relay from pin 6 of the power cord terminal block. Line voltage to the basket lift motors is supplied via the basket lift relay.

1.4.2 How the Controller Works

The SMS III controller provides the interface between the operator and the system components. The controller is powered by 24VAC supplied through pins 1 and 2 of the wiring harness. Internal circuitry senses the water level and water temperature. Depending upon the conditions sensed, the controller energizes or de-energizes the solenoid valve which controls the water level. The 24VAC relay controls burner firing which controls water temperature. The controller also controls the lowering and raising of the basket lift, and activates an audible alarm to signal the operator that a cooking cycle has completed. A rectifier in the controller converts 24VAC to the 24VDC required by the basket lift relay. The controller signals for heat via pin 4, grounds the solenoid valve via pin 6, and senses water level via pins 7 (low) and 9 (full). The temperature probe connects to pins 13 and 14. The basket lift relay connects to pins 10 and 12. The sound device connects to pin 11.

1.4.3 How the Autofill/Autoskim System Works

The heart of the automatic filling (Autofill) system is a normally closed solenoid valve that opens when 24VAC is applied.

The ground for the solenoid is supplied (via pin 6 of the controller wiring harness) so long as the shorter of the two water-level sensors is not in contact with the water in the cookpot. When the water in the cookpot reaches the shorter of the two water-level sensors, the sensor is grounded. This causes the controller to break the solenoid ground, closing the valve. Starch or lime build-up on the sensor may keep it from grounding, therefore always make sure the sensor is clean and its lead (pin 9 of the controller wiring harness) is firmly connected. Also, in order for the sensor to ground, there must be some mineral content in the water (pure water is non-conductive). Consequently, the unit will not operate correctly with distilled, highly filtered, or deionized water. If water of these types is

used, add ⅛-cup of baking soda to the water each time the cookpot is emptied and refilled. **NOTE: Do not use deliming solution to clean these units. Use of deliming solution will damage all stainless steel parts.)**

On units equipped with the Autoskim feature, a logic circuit in the controller automatically opens the solenoid valve for three seconds every minute. If the autofill feature is working properly, failure of the autoskim feature will be due to a malfunctioning controller and not the solenoid valve. (Proper operation of the autofill feature can be determined by draining water from the cookpot until the water level is below the shorter of the two water-level sensors. If the solenoid valve opens and then closes when the water in the cookpot again reaches the sensor, the autofill feature is working properly.)

1.4.4 How the Water Heating System Works

To prevent lighting the burners when there is no water in the cookpot, these units are equipped with a **low-water-level sensor** (the longer of the two water-level sensors). This sensor must be grounded by contact with water in the cookpot before the control circuitry will allow firing of the burners. Starch or lime build-up on the low-water-level sensor may keep the sensor from grounding, therefore always make sure the sensor is clean and its lead (Pin 7 of the controller wiring harness) is firmly connected. Also, in order for the sensor to ground, there must be some mineral content in the water (pure water is non-conductive). Consequently, the unit will not operate correctly with distilled, highly filtered, or deionized water. If water of these types is used, add ⅛-cup of baking soda to the water each time the cookpot is emptied and refilled. **NOTE:** Do not use deliming solution to clean these units. Use of deliming solution will damage all stainless steel parts.)

In addition to the low-water-level sensor discussed above, the water heating system has three more parts: the electronic ignition system, the temperature probe, and the controller.

The **electronic ignition system** controls firing of the burners. See Page 1-3 for a complete description of this system.

The **temperature probe** is used only when the unit is in the simmer mode. When the simmer mode is selected, logic circuits in the controller monitor the temperature of the water. When the water temperature drops below the simmer setpoint, the controller closes the heat relay, causing the burners to fire. When the water temperature reaches the setpoint, the controller opens the heat relay, extinguishing the burners. This process repeats as required to maintain the temperature at the setpoint programmed into the controller.

The **controller** is the interface between the operator and the other components of the equipment. In the water heating system, its function is to control the firing of the burners.

1.4.5 How the Basket Lift System Works

When the start switch is pressed to start the cooking cycle, logic circuits in the controller activate the basket lift motors, lowering the basket into the cookpot. As the motors drive the basket lift arms down, a cam attached to the left motor (when viewed from the rear) eventually loses contact with a roller-activated microswitch and power to the motors is cut. When the controller times out, logic circuits reverse the switch positions so that the motor circuit is again completed and the motors are restarted, raising the basket from the cookpot. At the fully raised position, the cam again makes contact with the microswitch, cutting power to the motors and stopping the lift in the raised position.

1.4.6 Technician Troubleshooting Guides

PROBLEM	PROBABLE CAUSES	CORRECTIVE ACTION
Autofill does not add water when water level is below the normal water-level sensor (the shorter of the two water-level sensors).	A. Water not turned on.	A. Turn on Water
	B. Failed solenoid, failed computer, or loose/broken wiring. **Test**: Check for at least 22VAC at Pin 5 of the 24VAC terminal block and at solenoid end of wire 66C, and check for ground (0 voltage) at pin 6 of 15-pin connector.	B. If voltage is present at solenoid end of wire 66C, and Pin 6 of 15-pin connector is grounded (0 voltage present), check continuity of wire 50C. If wire 50C is good, replace solenoid. If voltage is present at solenoid end of wire 66C **and** at Pin 6 of 15-pin connector, replace controller. If voltage is not present at solenoid end of wire 66C, check wiring between solenoid and terminal block for loose connection or break in the wire.
Autofill does not shut off when the cookpot is full.	A. Starch accumulation on the normal water-level sensor (the shorter of the two water-level sensors) is preventing the sensor from grounding.	A. Clean the water-level sensors. **NOTE:** Do not use deliming solution.
	B. Mineral content of water is too low to provide a ground.	B. Add 1/8th cup of baking soda to water in cookpot. **DO NOT USE SALT!** Doing so will damage the cookpot.

PROBLEM	PROBABLE CAUSES	CORRECTIVE ACTION
Continued from previous page.	C. Failed solenoid, failed computer, or broken/loose wiring. **Test 1**: Check sensor-lead connections on outside of cookpot and at pin 9 of 15-pin connector and continuity of wire 71C. **Test 2**: Check for AC voltage at Pin 6 of 15-pin connector. **Test 3**: Check for at least 22VAC at solenoid end of wire 66C.	C. **Action 1**: Tighten connections or replace wiring as required. **Action 2**: If AC voltage is not present, replace controller. **Action 3**: If AC voltage is present, replace solenoid. If AC voltage is not present, check wiring between solenoid and terminal block for loose connection or break in the wire.
Autoskim does not add water when selected (Autofill feature verified to be working correctly).	A. Failed controller.	A. Replace controller.
Basket lift does not lower when START button is pressed or rise when cooking cycle completes.	A. Failed basket lift relay. **Test**: Check for 13-17VDC at Pin 10 of 15-pin connector with basket lift in the UP position, and for 0 volts with the basket lift in the DOWN position.	A. If voltages are correct, replace relay.
	B. Failed controller. **Test**: Check for 13-17VDC at Pin 12 of 15-pin connector.	B. Replace controller if voltage is below 12VDC.
Basket lift travels up and down continuously.	A. Failed or out of adjustment microswitch. **Test**: Check continuity of switch and verify that roller contacts cam.	A. Replace switch if it fails continuity check. Adjust switch mounting to ensure roller contacts cam.
Basket lift travels erratically or with jerking motion.	A. Bell crank slipping on shaft.	A. Tighten bell crank setscrew. Ensure nut and locknut on shaft are tight.
	B. Lift arms binding in bushings	B. Lubricate lift arms.
	C. Defective motor.	C. Replace motor.
Burner attempts to light but will not remain lit.	A. Flame sensor wire and ignitor cables crossed.	A. Verify that sense 1 and spark 1 connect to same ignitor.
Burner will not light; trouble light is on.	A. Cooker gas valve is turned off.	A. Turn gas valve on.
	B. Incoming gas line shut-off valve is closed.	B. Open incoming gas line shut-off valve.
Burner will not light; trouble light is not on, blower is not running.	A. Failed 24VAC (blower) relay. **Test**: Check for 24VAC on pin 4 of 15-pin connector.	A. If voltage is present, replace relay.

PROBLEM	PROBABLE CAUSES	CORRECTIVE ACTION
	B. Failed controller.	B. Replace controller.
Burner will not light; trouble light is on, blower is running continuously.	A. Failed blower centrifugal switch. **Test**: Check for 24VAC at bottom 24VAC terminal of ignition module (wire 7C).	A. If voltage is not present, replace blower.
	B. Failed ignition module or gas valve. **Test**: Check for 24VAC output from module to gas valve, and for high voltage spark from module to ignitor.	B. If either is not present, replace the module. If both are present, replace the gas valve.
Burner produces popping sound when lighting.	A. Dirty blower inlet and fan.	A. Clean blower.
	B. Vent tube on gas valve is clogged, causing high burner gas pressure.	B. Remove and clean vent tube.
	C. Cracked/broken ceramic tiles in burner.	C. Replace burner.
	D. Failed ignitor.	D. Replace ignitor.
Controller display is blank.	A. Controller not turned on.	A. Turn on controller.
	B. Cooker power cord not plugged in.	B. Plug power cord into appropriate outlet.
	C. Main circuit breaker tripped.	C. Reset main circuit breaker.
	D. Failed transformer. **Test**: Check for 24VAC on transformer secondary.	D. If voltage is incorrect, replace transformer.
	E. Failed controller.	E. Replace controller.
Controller does not count down.	A. Operator error. **Test**: Verify correct cook time is programmed. Press START button.	A. Demonstrate proper operating procedure to operator.
	B. Failed controller. **Test**: Verify correct cook time is programmed. Press the START button.	B. If timer does not count down, replace controller.

PROBLEM	PROBABLE CAUSES	CORRECTIVE ACTION
Water boils in simmer mode.	A. Failed/shorted temperature probe. **Test**: Check for shorted probe circuit. Probe resistance should be approximately 552 Ohms @ 60°F (16°C), 655 Ohms @ 100°F (38°C), and 1000 Ohms @ 212°F (100°C). See probe resistance chart on page 1-17 for other temperatures.	A. If resistance is out of specification, replace the temperature probe.
Water temperature too low in simmer mode.	A. Controller out of calibration	A. Recalibrate simmer setpoint.
	B. Temperature probe open. **Test**: Check for loose connections.	B. If connections are secure, replace temperature probe.

1.4.7 Benchmark Probe Resistance Chart and Wiring Diagrams

Temperature °F	Temperature °C	Resistance
65	18	694 Ω ± 5
75	24	717 Ω ± 5
85	29	741 Ω ± 5
195	90.5	949 Ω ± 5
212	100	1000 Ω ± 5

WIRING DIAGRAMS
GPC, GPCB, GPCR and GPCRB

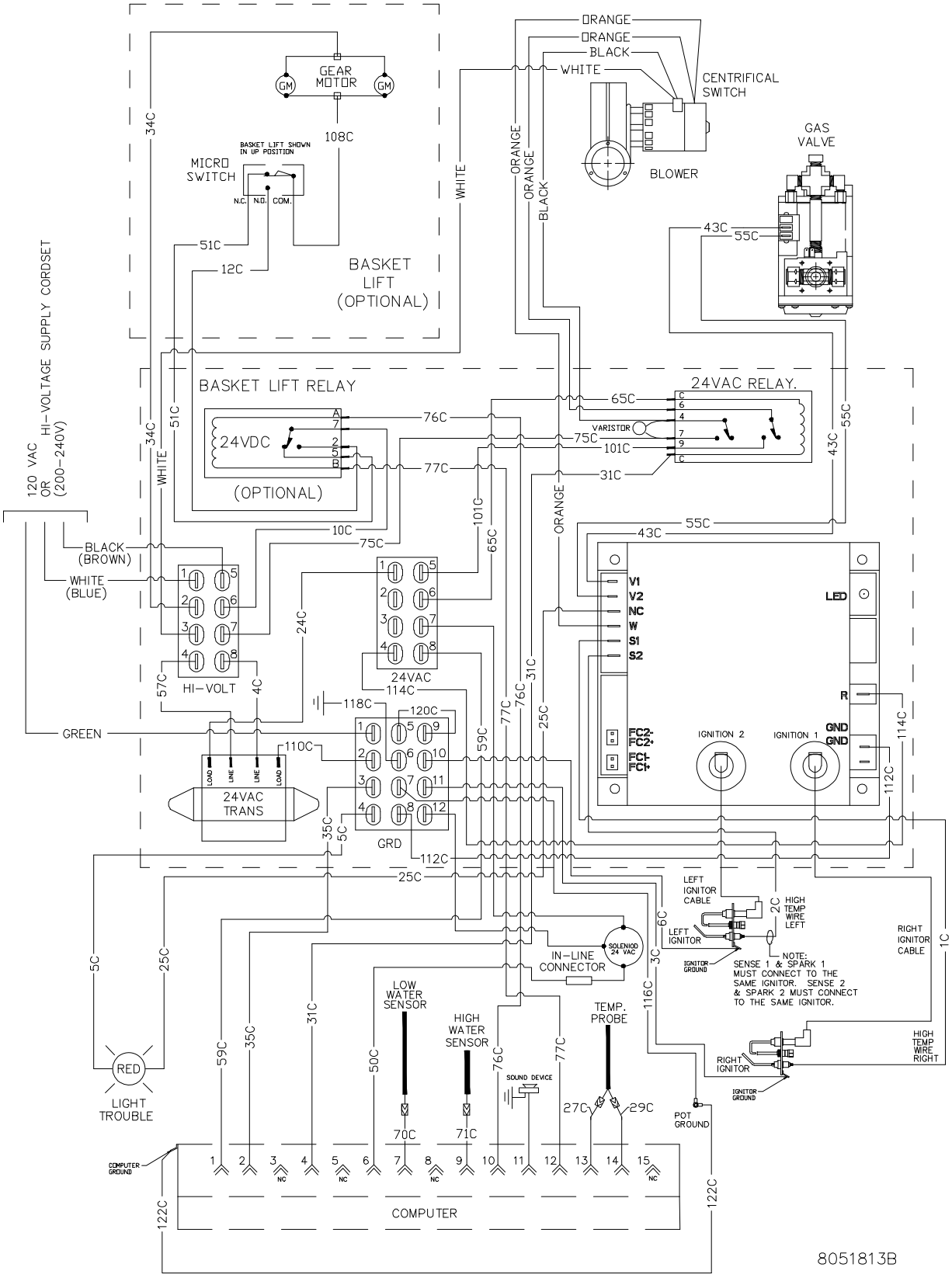

GPC, GPCB, GPCR and GPCRB (Noodles)

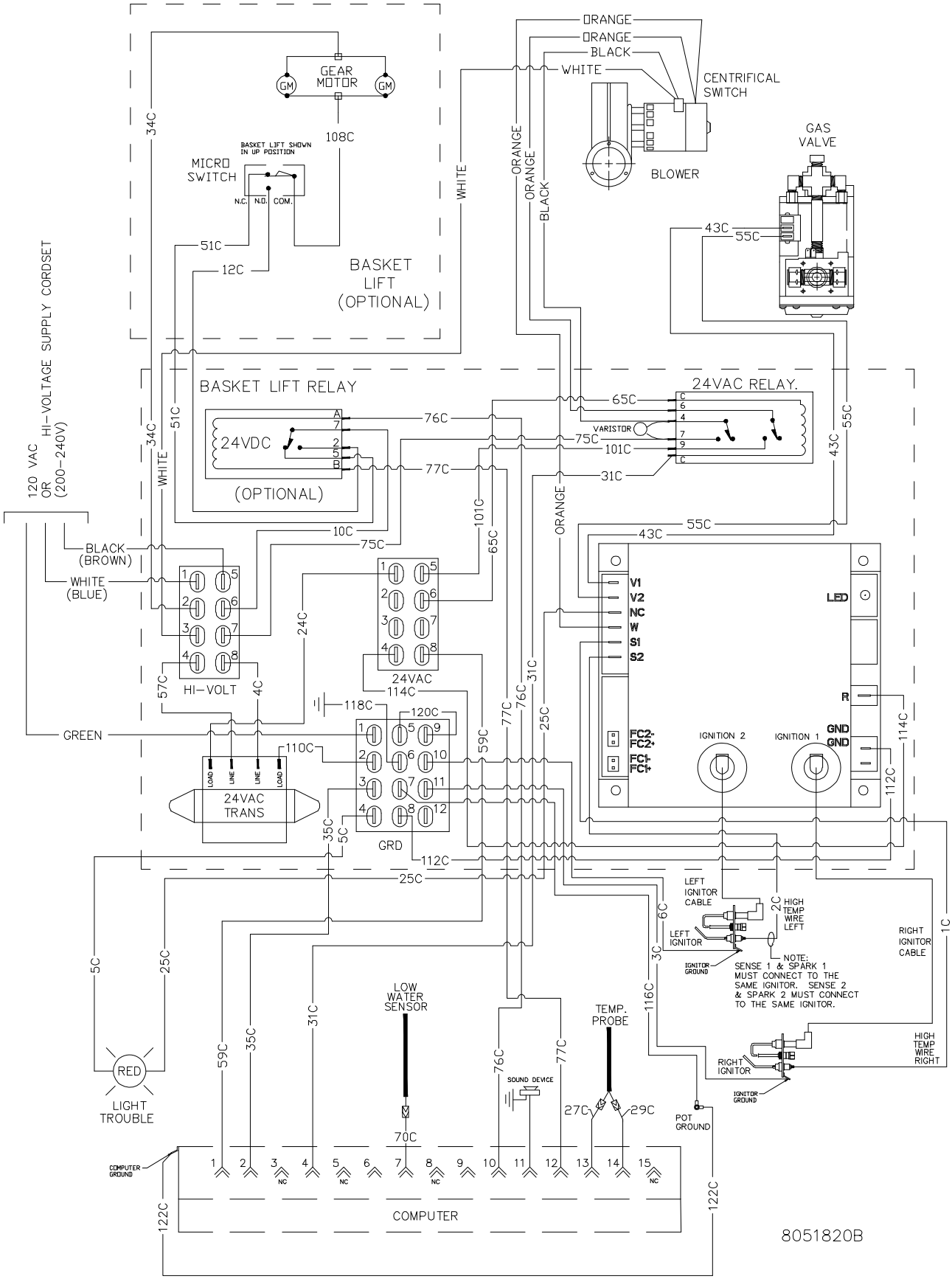

GPC, GPCB, GPCR and GPCRB (CE)

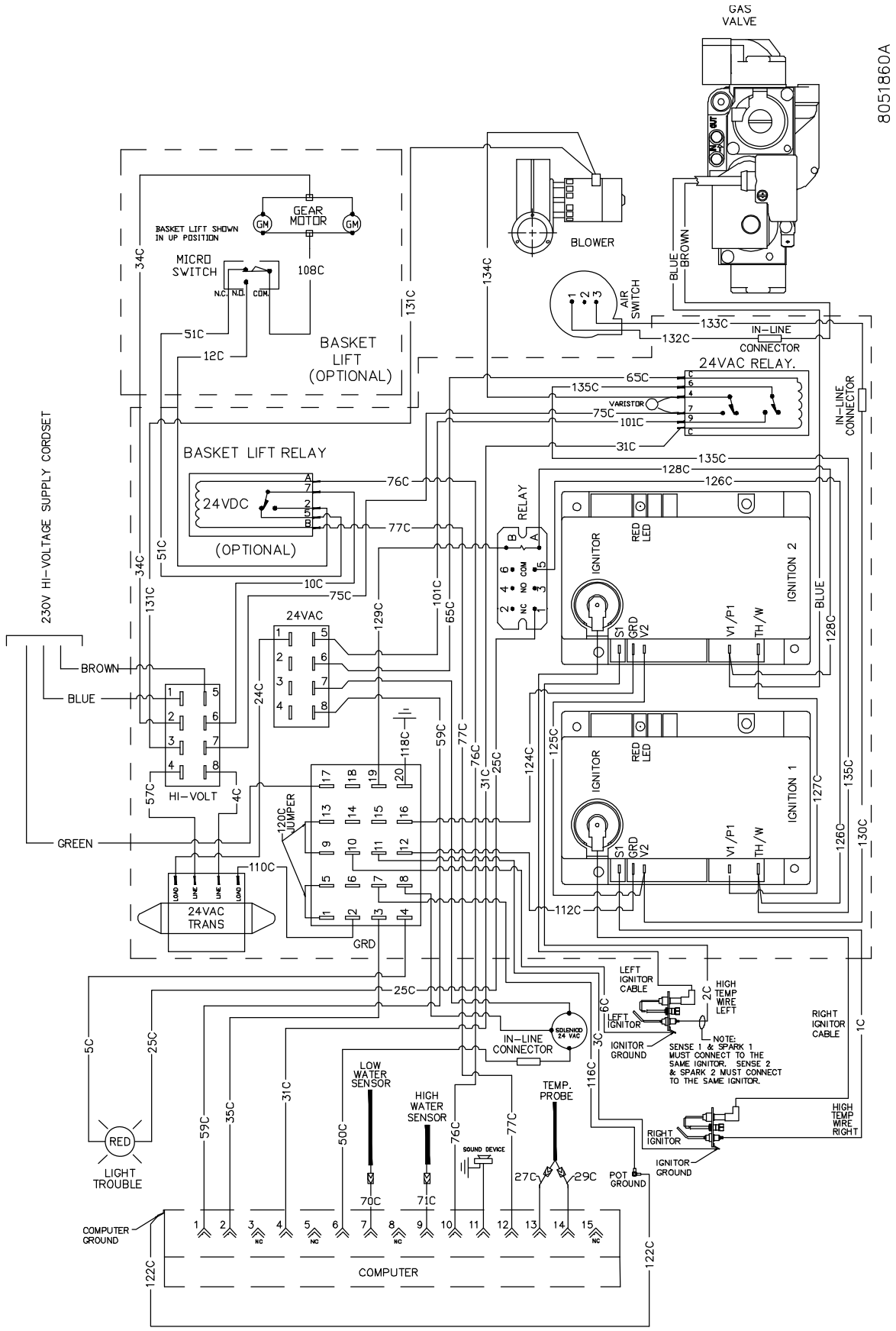

PASTA MAGIC GAS COOKERS GPC, GPCB, GPCR AND GPCRB SERVICE AND PARTS
CHAPTER 2: PARTS LIST

2.1 Accessories

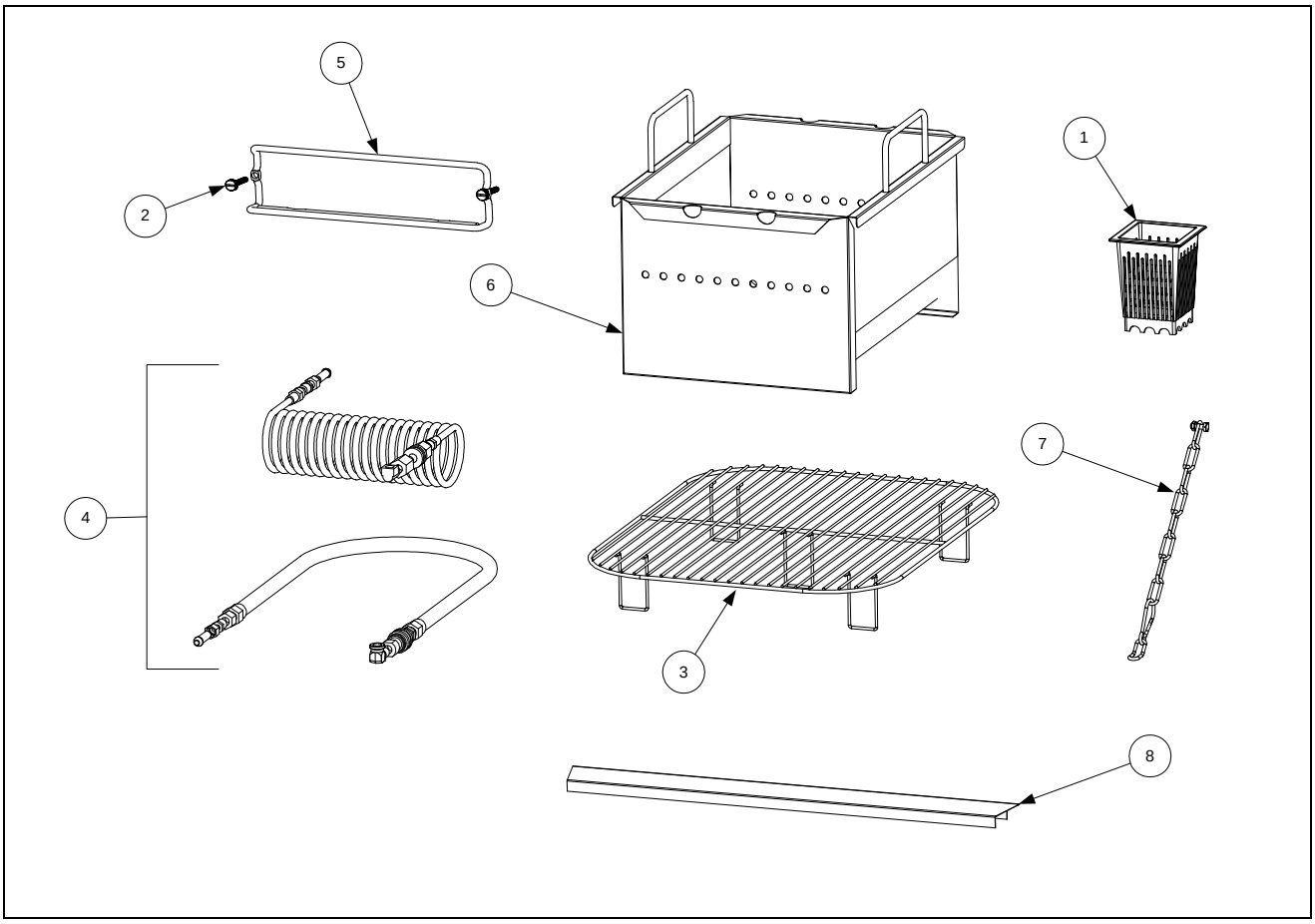

ITEM	PART #	COMPONENT
1	803-0018	Cup, Single Pasta Portion (Beige)
2	810-2229	Hanger, Wire-Form Basket
3	803-0205	Rack, Support
4	806-5848SP	Kit, Hose (Swirl and Straight w/Fittings)
5	809-0985	Thumbscrew, ¼-20 x 1⅛
6	823-1910	Basket, GSMS Bulk
7	826-0900	Kit, Chain Restraint
8	823-7880	Strip, Top Connecting
*	803-0200	Rack, 12 Portion Cup
*	803-0238	Basket, 5½ x 8½ SS Round Pasta

* Not illustrated.

2.2 Basket Lift Components

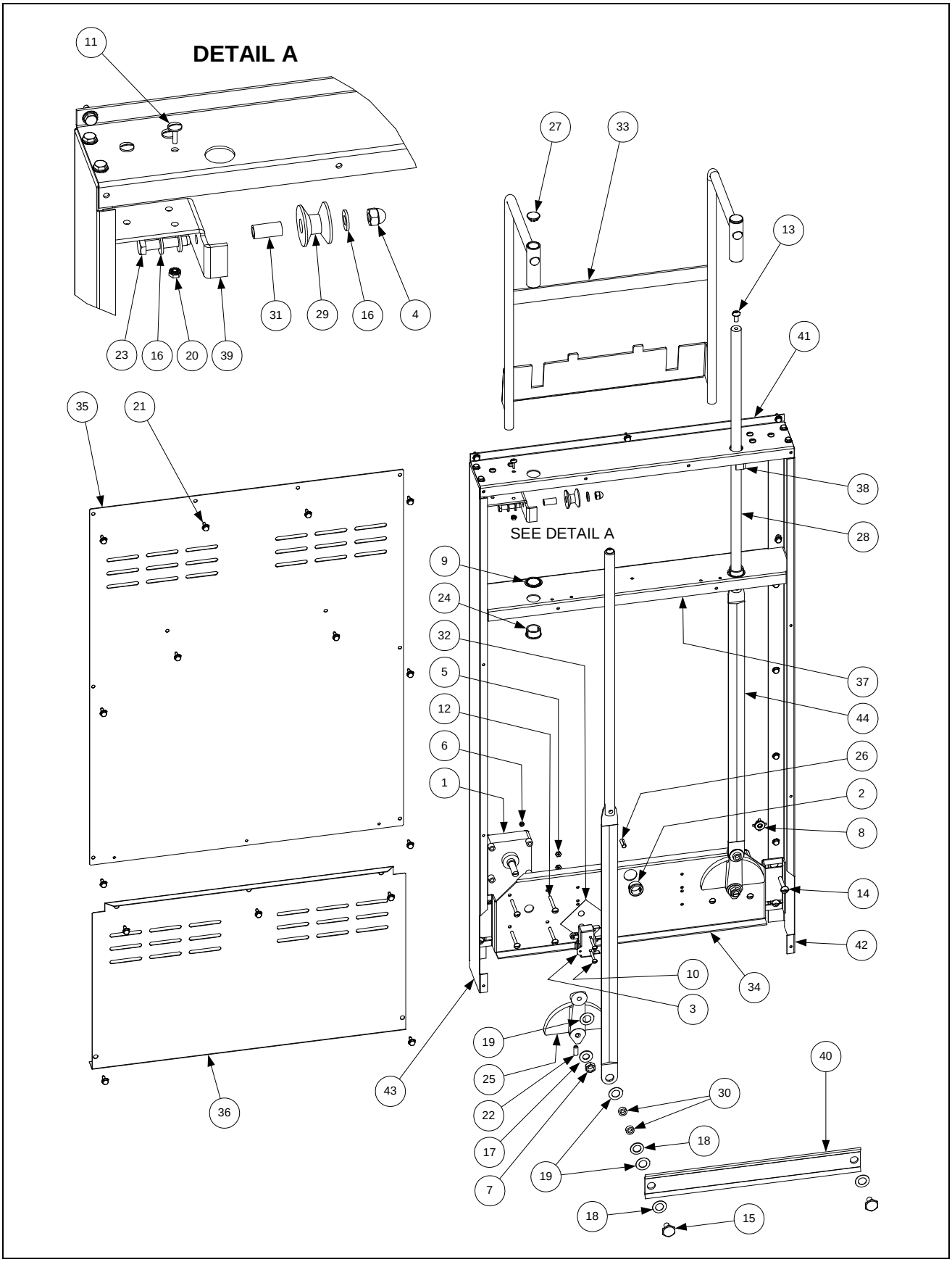

2.2 Basket Lift Components cont.

ITEM	PART #	COMPONENT
1		Motor, Basket Lift
	807-0107	120 VAC
	807-0108	240 VAC
2	807-0124	Bushing, Plastic
3	807-0240	Microswitch, BA-2RV22-D6
4	809-0047	Nut, ¼-20 Hex Head Cap
5	826-1358	Nut, 6-32 Hex Head (Pkg. of 25)
6	809-0050	Nut, 8-32 Hex Head
7	809-0063	Nut, ¾-inch Jam
8	809-0076	Nut, ¼-20 Expansion
9	809-0082	Ring, Retaining (secures Item 24 in place)
10	809-0097	Screw, 6-32 x 1-inch Slotted Truss Head
11	826-1363	Screw, 8-32 x ½-inch Slotted Truss Head (Pkg. of 25)
12	809-0113	Screw, 8-32 x 1½-inch Slotted Truss Head
13	809-0127	Screw, ¼-20 x ½-inch Slotted Round Head
14	826-1370	Screw, ¼-20 x 1½-inch Slotted Round Head
15	809-0155	Screw, Leveling
16	809-0190	Washer, ¼-inch SS Flat
17	809-0196	Washer, ⅜-inch Flat
18	809-0200	Washer, ¼-inch Flat
19	826-1381	Washer, ½-inch Nylatron (Pkg. of 10)
20	809-0247	Nut, 8-32 Hex Head Keps
21	826-1374	Screw, #10 x ½-inch Hex Head (Pkg. of 25)
22	809-0480	Setscrew, ¼-28 x ⅝-inch (secures Item 25 to motor shaft)
23	809-0508	Bolt, ¼-20 x ¼-inch SS AT Hex Head
24	813-0035	Bushing, .875 Hole
25	810-0052	Bellcrank (Cam)
26	810-0170	Pin, ¼-inch x ⅝-inch Spring Dowel
27	810-0172	Button, Plug
28	810-0192	Rod, Basket Lift
29	810-0194	Roller, Basket Lift
30	810-0220	Spacer, .493-inch x .200-inch Tubular
31	810-0374	Spacer, Basket Lift Roller Tubular
32	812-0138	Insulation, Paper
33	823-2007	Arm Assembly, Basket Lift *(Use 823-7061 for Stainless)*
34	900-7416	Mount, Basket Lift Motor
35	900-7418	Back, Upper Basket Lift Enclosure *(Use 210-8297 for Stainless)*
36	900-7419	Back, Lower Basket Lift Enclosure *(Use 230-3762 for Stainless)*
37	220-7177	Support, Basket Lift Center
38	901-1927	Bracket, Left Basket Lift Roller
39	902-1927	Bracket, Right Basket Lift Roller
40	910-4525	Bar, Basket Lift Synchronizing
41	910-7420	Top, Basket Lift Enclosure
42	911-7417	Side, Basket Lift Enclosure *(Use 231-3764 for Stainless)*
43	912-7417	Side, Basket Lift Enclosure *(Use 232-3764 for Stainless)*
44	920-6076	Link, Basket Lift

NOTE: Order KIT0004SP to add a complete basket lift assembly to a GC unit.

2.3 Cabinetry

2.3.1 GPC/GPCB

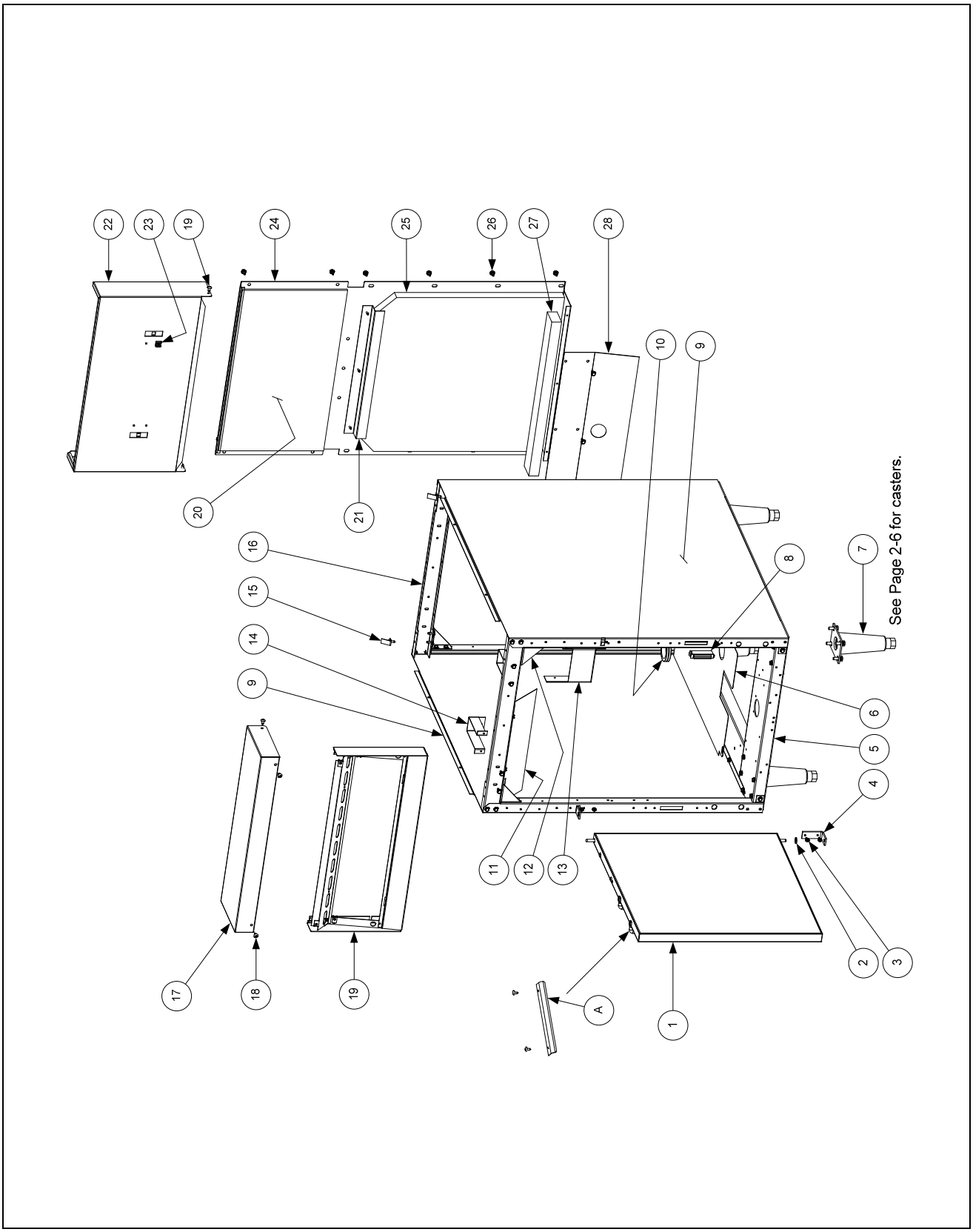

2.3.1 GPC/GPCB cont.

ITEM	PART #	COMPONENT
1	108-1434	Door Assembly, 18.66-inch x 19.85-inch (does not include handle)
	106-4067	Door Pin Assembly
	826-1343	Spring, Door Hinge (Pkg. of 10)
A	230-4963	Handle, Wireform Door
2	809-0193	Washer, ¼-inch Nylon Flat
3	826-1371	Screw, #8 x ½-inch Drill Point Hex Head Zinc Plated (Pkg. of 25)
4	230-7192	Hinge, Universal Door
*	230-4685	Hinge, Lower
5	108-1413	Base Assembly, GPC/GC SS *(Use 108-1414 CR for GPCB)*
	806-5209SP	Leg Pad Assembly
	900-4655	Channel, Front or Rear Base
	900-7528	Channel, Left or Right Base
6	220-6976	Shield, GBC/GC Vapor (See **NOTE** below)
*	200-5095	Shield, Vapor (for units with manual water fill)
7	826-1119	Leg Assembly w/Mounting Hardware
8	810-1105	Magnet, Door
9		Side, Left or Right Cabinet
		Stainless Steel *(Use 231-6969 Left or 232-6969 Right)*
		Enameled Mild Steel *(Use 221-6966 Left or 222-6966 Right)*
10	816-0091	Grommet, 1¼-inch Drain
11	900-4651	Shield, Control Box Water
12	900-1552	Gusset
13	900-1940	Bracket, Control Box Mounting
14	900-1759	Bracket, Pot Hold-Down
15	900-1932	Retainer, Flue Insulation
16	900-4654	Brace, Front or Rear Top
17	824-2120	Topcap
18	809-0266	Screw, #10 x ½-inch Philips Truss Head Zinc Plated
19	108-1426	Frame Assembly, Control Panel
20	816-0158	Insulation, 18.25-inch x 10.7-inch x .25-inch Cabinet Back
21	900-4521	Retainer, Cabinet Back Insulation
22	108-1424	Flue Cap and Insulation Assembly
	823-7592	Flue Cap
	816-0169	Insulation, 8.12-inch x 18-inch x .25-inch Flue Cap
	910-1181	Retainer, Flue Cap Insulation
	809-0053	Nut, 10-32 Hex
23	826-1351	Nut Retainer, ¼-20 (Nutsert) (Pkg. of 10)
24	108-1485	Back, GPC Single Cabinet CR *(Use 108-1432 for Stainless)*
	108-1825	Back, Upper GPC Single Cabinet Noodle's
	108-1826	Back, Lower GPC Single Cabinet Noodle's
25	812-1141	Insulation, Cabinet Back
26	826-1374	Screw, #10 x ½-inch Hex Head (Pkg. of 25)
27	812-1142	Insulation, Cabinet Back
28	900-4645	Shield, Basket Lift Heat

* Not illustrated.

2.3.2 GPCR/GPCRB Batteries

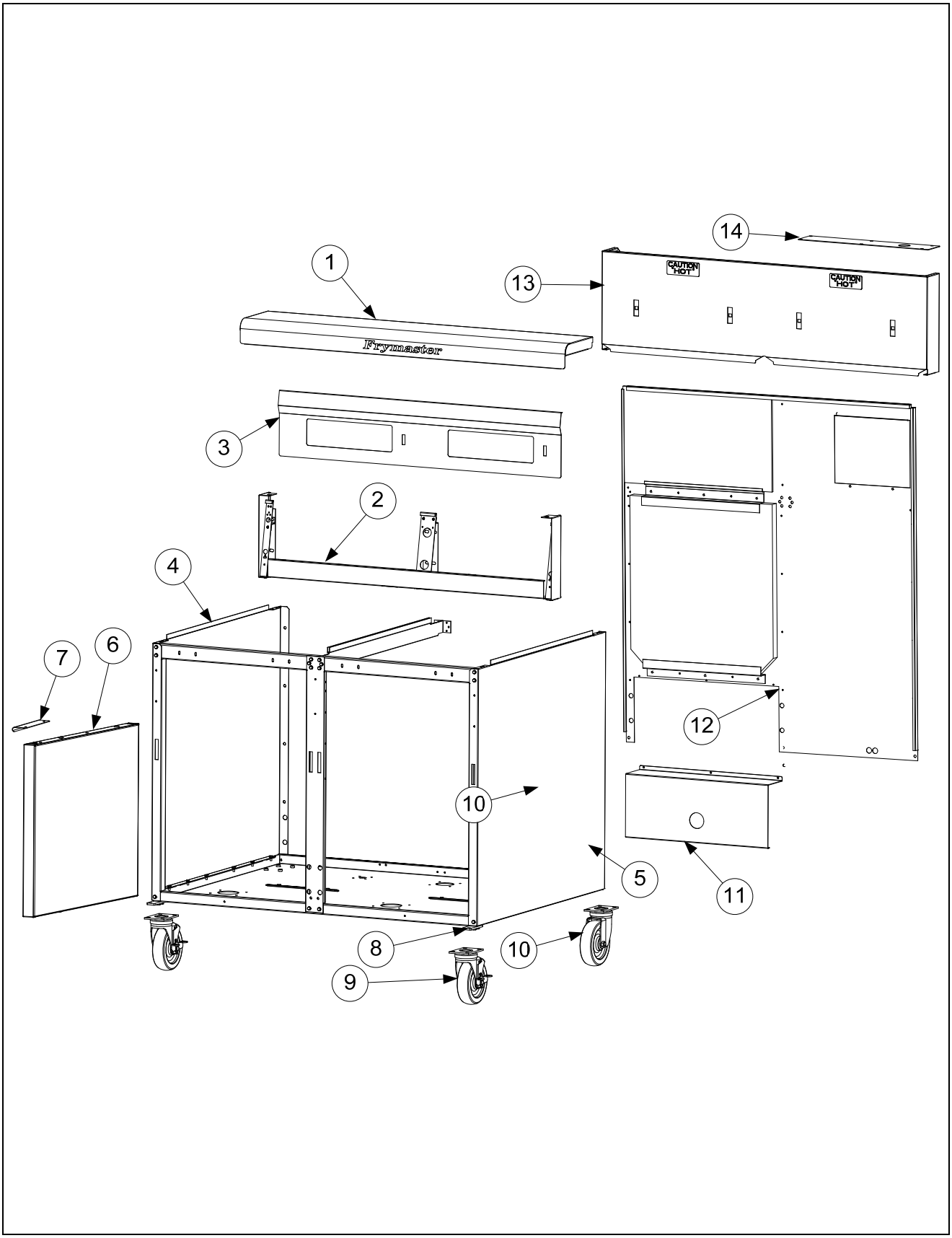

2.3.2 GPCR/GPCRB Batteries cont.

ITEM	PART #	COMPONENT
		Cabinet Assemblies
	108-2146	Double GPC Cooker/Cooker Stainless *(Use 108-2154 for CR)*
	108-1831	Double Cooker on left/Rinse on right *(Use 108-1832 for CR)*
	108-1838	Double Rinse on left/Cooker on right *(Use 108-1839 for CR)*
	108-1976	Triple Cooker on left/Rinse in middle/Cooker on right *(Use 108-1977 for CR)*
1		Topcap
	824-2168	Double GPC Cooker/Cooker
	824-2143	Double Cooker on left/Rinse on right
	824-2144	Double Rinse on left/Cooker on right
	824-2154	Triple Cooker on left/Rinse in middle/Cooker on right
2		Control Panel Assembly, GPC
	108-2149	Double GPC Cooker/Cooker
	108-1844	Double Cooker on left/Rinse on right
	108-1845	Double Rinse on left/Cooker on right
	108-1981	Triple Cooker on left/Rinse in middle/Cooker on right
3		Bezel
	230-7798	Double GPC Cooker/Cooker
	230-7400	Double Cooker on left/Rinse on right
	230-7401	Double Rinse on left/Cooker on right
	230-7555	Triple Cooker on left/Rinse in middle/Cooker on right
4	231-6969	Side, Left Cabinet Stainless *(Use 221-6966 for CR)*
5	232-6969	Side, Right Cabinet Stainless *(Use 222-6966 for CR)*
6	108-0577	Door Assembly (does not include item #7) used on all except triple middle.
	106-4067SP	Door Pin Assembly
	826-1343	Spring, Door Hinge (Pkg. of 10)
	108-1434	Door Assembly (does not include item #7) used only on triple middle door
7	230-4963	Handle, Door
8	230-7192	Hinge, Universal Door
9	826-1118	Caster w/Brake (includes mounting hardware)
10	826-1117	Caster w/o Brake (includes mounting hardware)
11	220-7182	Shield, Basket Lift Heat
12		Back, Cabinet, GPC
	108-2147	Double GPC Cooker/Cooker *(Use 108-2155 for CR)*
	108-1833	Double Cooker on left/Rinse on right *(Use 108-1835 for CR)*
	108-1840	Double Rinse on left/Cooker on right *(Use 108-1841 for CR)*
	108-1833 & 108-1432	Triple Cooker on left/Rinse in middle/Cooker on right *(Use 108-1835 & 108-1485 for CR)*
13		Flue Cap Assembly
	108-2148	Double GPC Cooker/Cooker
	108-1842	Double Cooker on left/Rinse on right
	108-1843	Double Rinse on left/Cooker on right
	108-1978	Triple Cooker on left/Rinse in middle/Cooker on right
14	230-7396	Mount, Faucet
15	810-1105	Magnet, Door

2.4 Combustion System Components

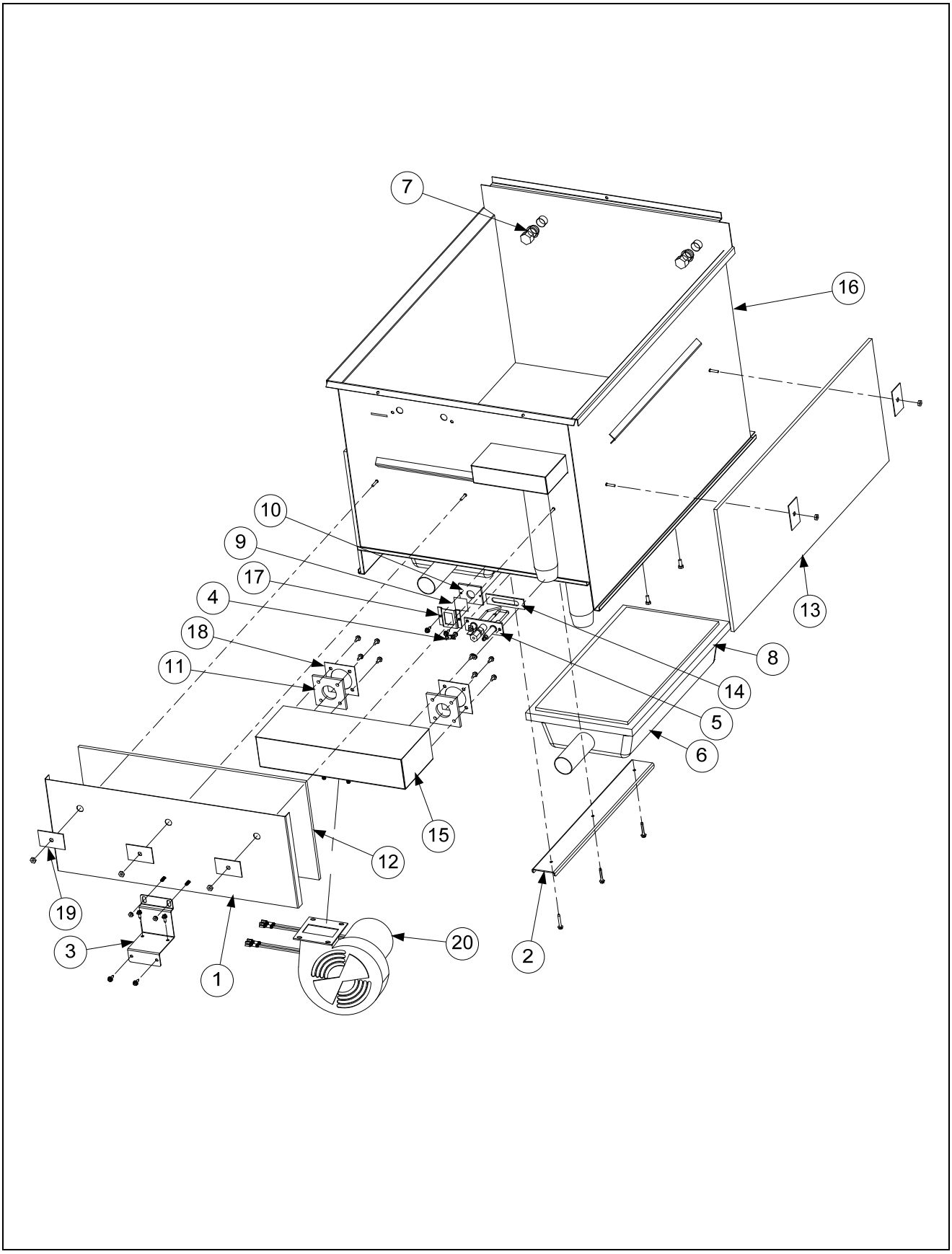

2.4 Combustion System Components cont.

ITEM	PART #	COMPONENT
		Cookpot Complete Assemblies (does not include burner (see item 20))
	108-1420SP	GPC Natural Gas
	108-1422	GPC Propane
	108-1655	GPC Natural Gas (Noodle's)
	108-1656	GPC Propane (Noodle's)
1	108-1419	Support Assembly, Plenum
2	220-6994	Bracket, Retainer Burner
3	220-6995	Bracket, Support Plenum
4	807-0037	Tab, Faston
5		Ignitor
	826-0981	Natural Gas
	826-0982	Propane Gas
6	826-1072	Burner, Universal Replacement
		Orifice, Burner
*	810-0386	2.10mm Propane/Butane (G30,G31) (0-4999 Ft., 0-1524M)
*	810-0403	3.40mm Natural Gas (G20, G25) (0-4999 Ft., 0-1524M)
*	810-0437	3.60mm Natural Gas(G20, G25) (5000 – 6999Ft., 1525-2133M)
7	810-0976	Nozzle, Water Inlet (Noodle's)
8	812-0357	Insulation, Burner
9	814-0048SP	Glass, Site
10	816-0053	Insulation, Site Glass
11	816-0057	Gasket, Plenum H50
*	816-0145	Insulation, Pot Side FBR 18
*	816-0155	Insulation, Rear Bottom GSMS
12	816-0152	Insulation, Front SMSG
13	816-0153	Insulation, 10x24x.25 GSMS Cookpot Side
14	816-0059	Insulation, Ignitor GSMS
15	823-7591	Plenum Assembly GPC
16	823-7590	Cookpot GPC
	823-7629	Cookpot GPC (Noodle's)
17	900-1031	Retainer, Sight Glass
18	900-1049	Retainer, Plenum Gasket
19	900-1762	Insulation, Retainer
20		Motor, Blower
	108-1540	120VAC/60 Hz
	807-1712	230VAC 50/60 Hz

*Not illustrated.

2.5 Control Box and Related Components

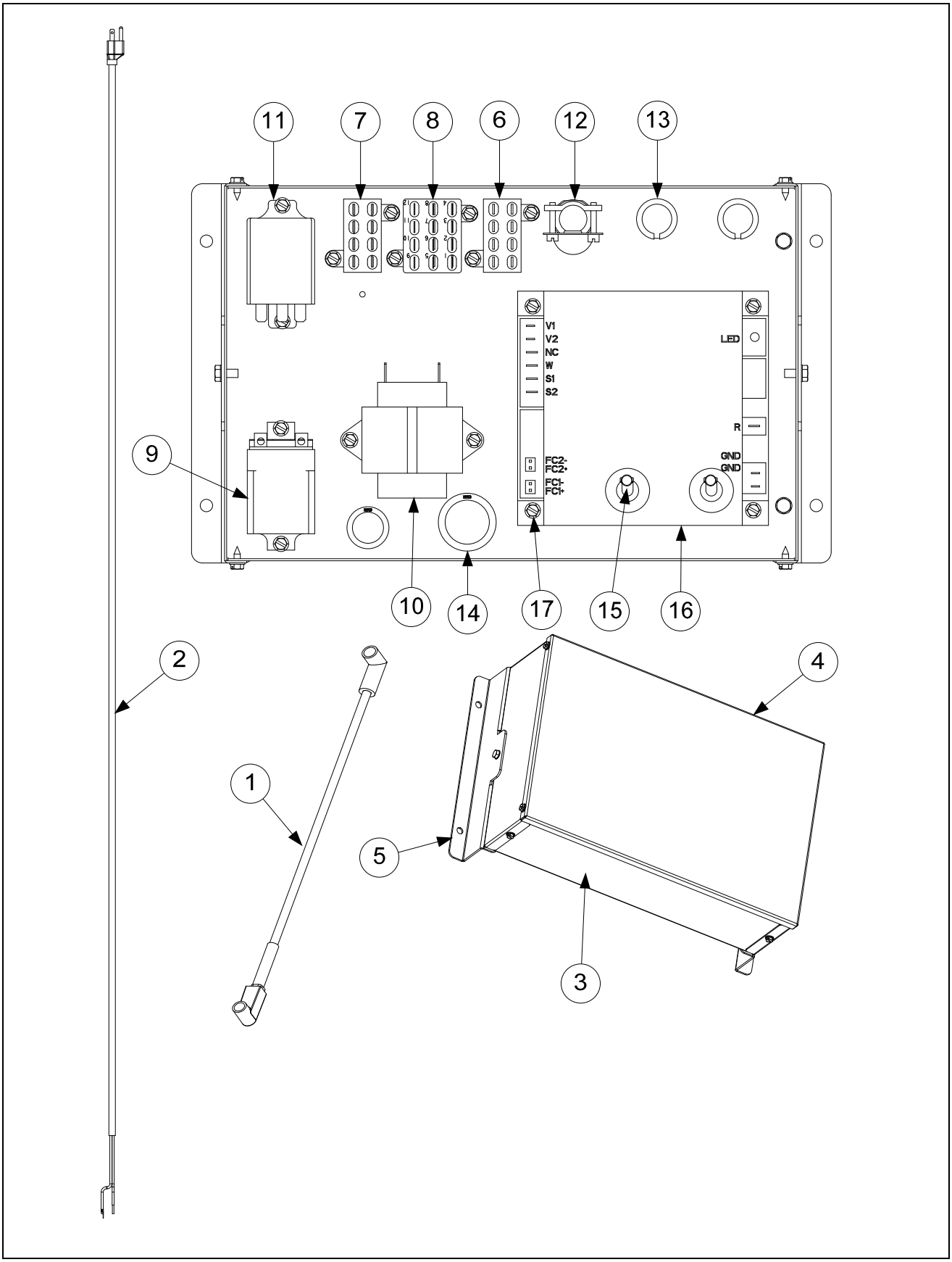

2.5 Control Box and Related Components cont.

ITEM	PART #	COMPONENT
		Component Assembly Boxes
	108-1506	Component Box Assy, 120V Non-BL GPC, GPCR
	108-1625	Component Box Assy, 120V BL GPCB, GPCRB
	108-1546	Component Box Assy, 230V Non-BL GPC, GPCR
	108-1626	Component Box Assy,, 230V BL GPCB, GPCRB
1	106-3338SP	Cable, Ignition 36” (used with Item 16 – also requires Item 15) (two required for each 807-4943 Ignition Module)
*	W1C585SP	Flame sensor wire
2		Cordset
	108-1541	120VAC (illustrated)
	108-1547	208-240VAC (not illustrated)
3	220-7051	Box, Component
4	220-7052	Cover, Box Component
5	220-7053	Mount, Component Box
6	807-0067	Block, Terminal 8 pin
7	807-0255	Terminal Strip
8	807-0276	Block, Terminal 20-pin
9	807-0670	Relay, DPDT 24V Heat Relay
10		Transformer
	807-0800	120VAC/24VAC, 50/60 Hz, 50VA
	807-0680	208-240VAC/24VAC, 50/60 Hz, 20VA
11	807-1396	Relay 24V SPST Basket Lift Relay (only present in GPCB and GPRCB only)
12	807-1612	Clamp, 3/8 Connector
13	807-1926	Bushing, Split .875
14	807-2469	Bushing, Heyco 1” ID
15	807-3484	Connector, Rajah (two required for each 807-4943 Ignition Module)
16	807-4943	Module, Fenwal Pasta Dual-Spark FV Ignition
17	810-0045	Bushing, .875 Hole 11/16
*	WIR0944	Wiring Assembly, 120V
*	WIR0945	Wiring Assembly, 208-240V
*	WIR0956	Wiring Assembly, Basket Lift
*	108-1539	Harness, Computer/Component Non-Basket Lift GPC, GPCR
*	108-1640	Harness, Computer/Component Basket Lift GPCB, GPCRB

* Not illustrated.

2.6 Controllers and Control Panel Components

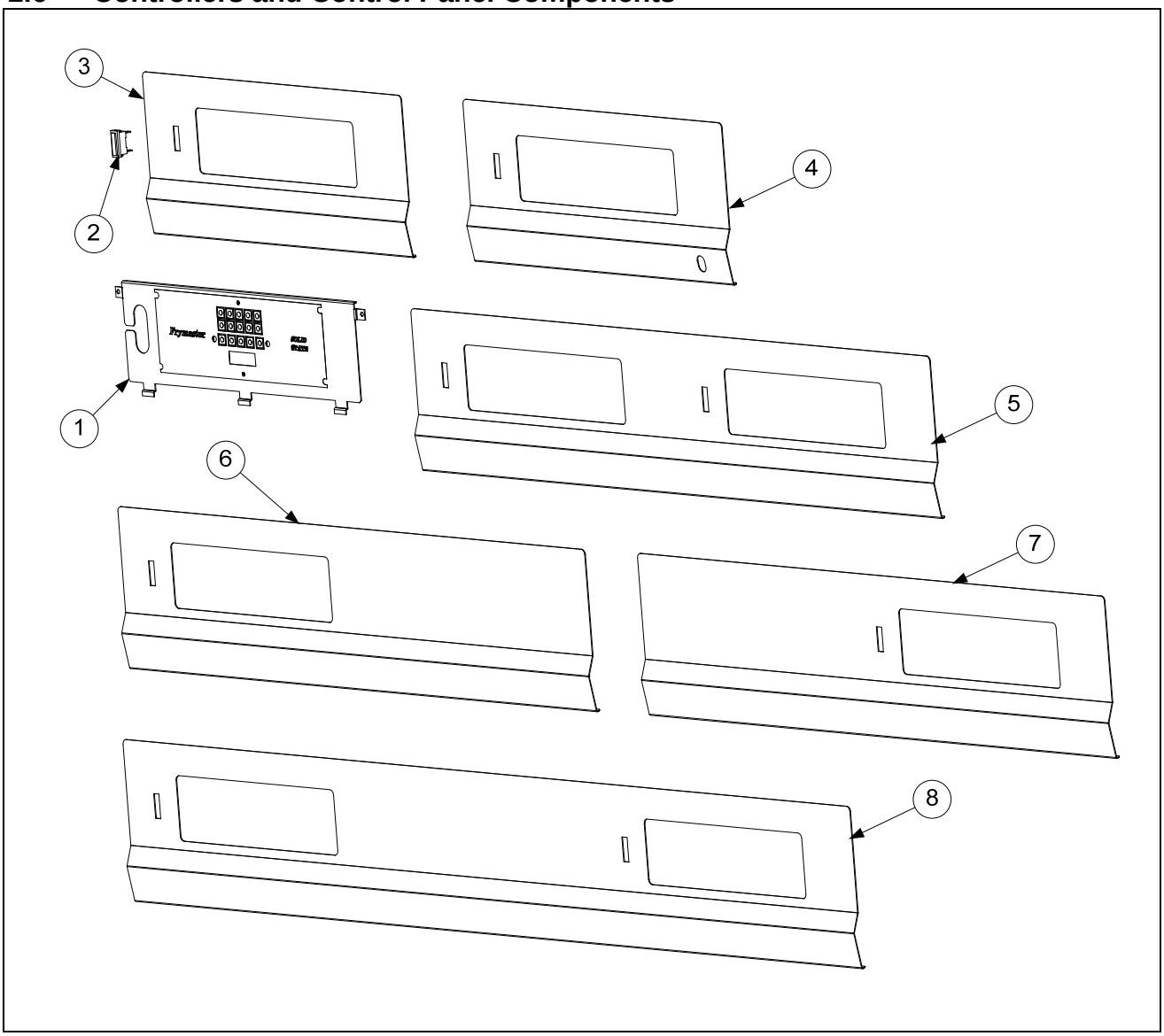

ITEM	PART #	COMPONENT
1	108-1444	Controller, SMS III GPC/GPCB/GPCR/GPCRB
2	807-1704	Lamp, 24VAC Vertical Trouble
3	230-7002	Bezel, GPC
4	230-7297	Bezel, GPC Noodle's
5	230-7798	Bezel, Double GPC Cooker/Cooker
6	230-7400	Bezel, Double Cooker on left/Rinse on right
7	230-7401	Bezel, Double Rinse on left/Cooker on right
8	230-7555	Bezel, Triple Cooker on left/Rinse in middle/Cooker on right

NOTE: See Page 2-11 for Controller Harness.

2.7 Cookpot, Rinse Tank, and Associated Components

2.7.1 Cookpot and Rinse Tank Components (Other than Cookpot Insulation)

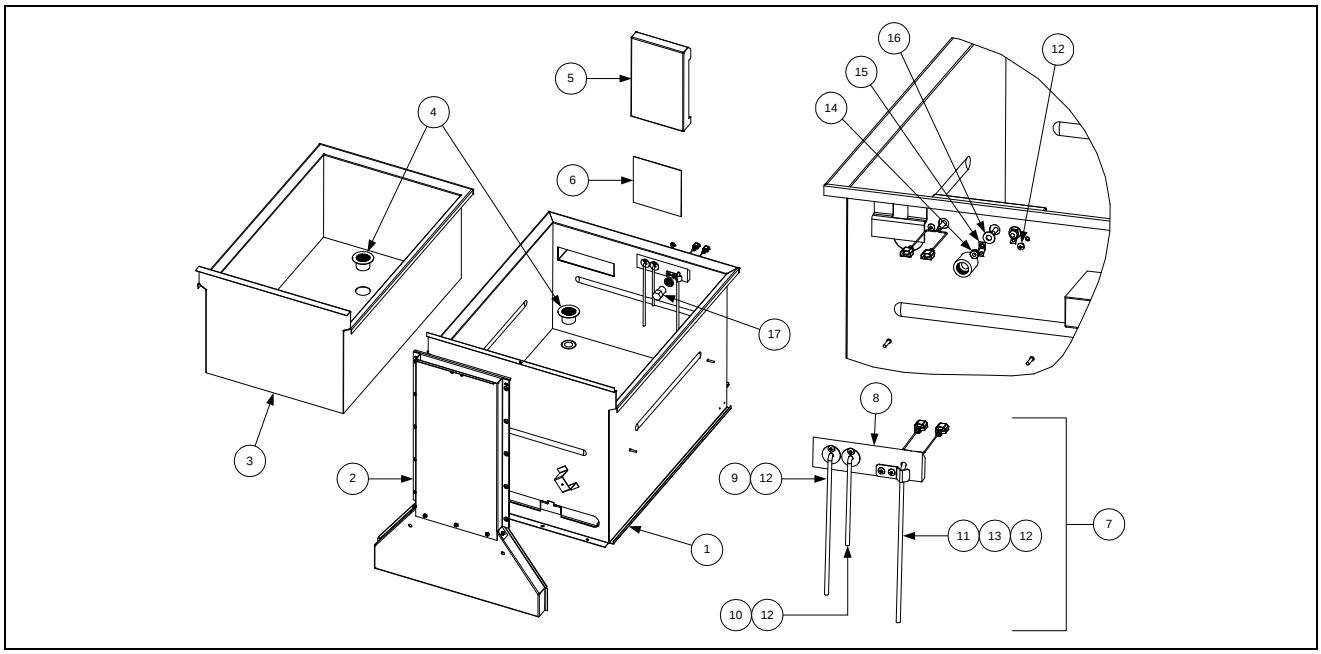

ITEM	PART #	COMPONENT
1	823-7590	Cookpot, GPC
	823-7629	Cookpot, GPC (Noodle's)
2	806-5497SP	Flue Assembly, GPC, GPCRB, GPCR, AND GPCRB
3	823-1994SP	Tank, GPCR, GPCRB Rinse
4	823-2022	Strainer Assembly
5	823-2791	Cover, Probe Block (angled top)
6	816-0160	Insulator, 5.25-inch x 5.00 Probe Cover
7		Probe Block Assembly, Complete
	806-9365SP	Angled top, for use on units without Autofill option.
	806-9366SP	Angled top, for use on units with Autofill option.
	106-3084SP	Angled top, for use on units with manual fill.
8	810-1697	Block, Probe (angled top)
9	823-1920	Sensor, Low Water Level (806-9365SP and 826-1082 use two each)
10	823-1921	Sensor, Normal Water Level (used in 806-9366SP and 826-1081)
11	806-4764	Probe Assembly, Temperature
12	809-0357	Screw, #6 x ⅜-inch Philips Truss Head Nickel Plated
13	910-1804	Bracket, Probe Retainer
14	826-1376	Nut, 10-32 Keps Hex Head (Pkg. of 10)
15	826-1337	Tab, Faston .25-inch (Pkg. of 5)
16	809-0193	Washer, ¼-inch Nylon Flat
17	810-0976	Nozzle, Water Inlet

* Not illustrated.

2.7.2 Cookpot Insulation

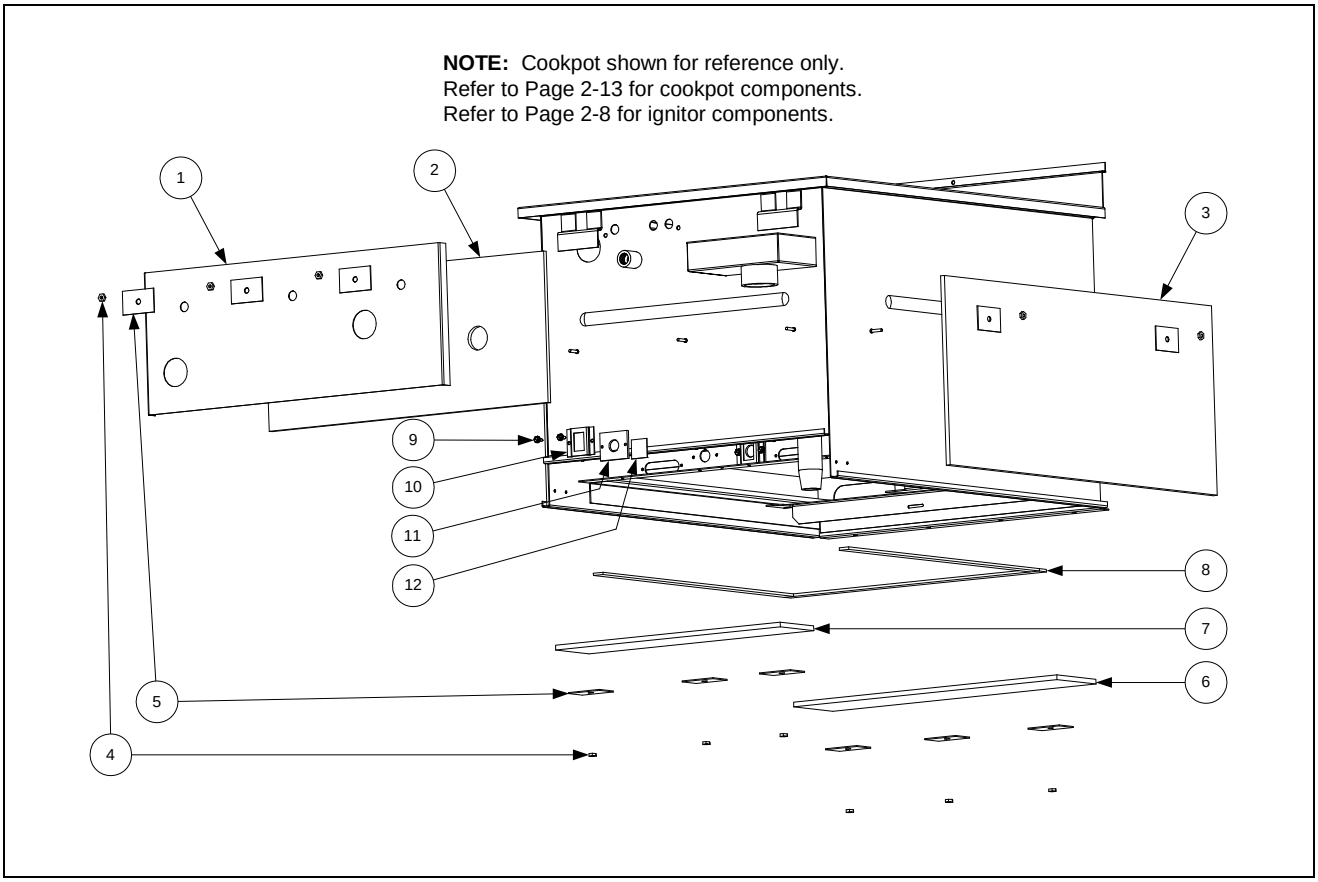

ITEM	PART #	COMPONENT
1	900-4563	Retainer, Cookpot Front Insulation (19.7-inches x 7.5-inches)
2	816-0152	Insulation, Cookpot Front (19.5-inches x 7.5-inches x .25-inches)
3	816-0153	Insulation, Cookpot Side (10-inches x 24-inches x. 25-inches)
4	809-0053	Nut, 10-32 Hex
5	900-1762	Retainer, Insulation
6	816-0145	Insulation, Front Bottom (3.0-inches x 14.5-inches x .25-inches)
7	816-0166	Insulation, Rear Bottom (3.5-inches x 17.0-inches x .25-inches)
8	812-0357	Insulation, HE Burner
9	826-1371	Screw, #8 x ½-inch Drill Point Hex Head Zinc Plated (Pkg. of 25)
10	900-1031	Retainer, Sight Glass
11	816-0053	Insulation, Sight Glass
12	814-0048SP	Glass, Sight

2.8 Drain Components

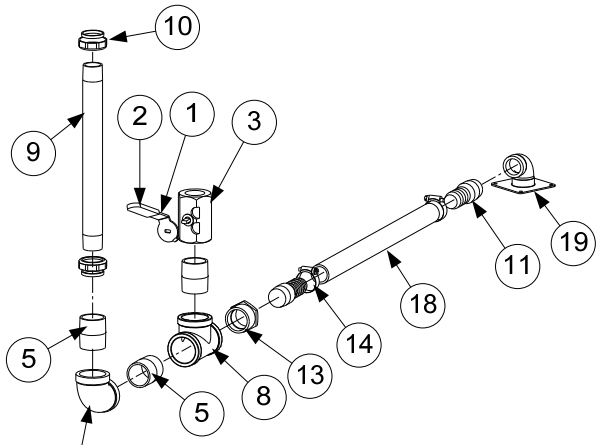

Drain Assembly, GPC
108-1430

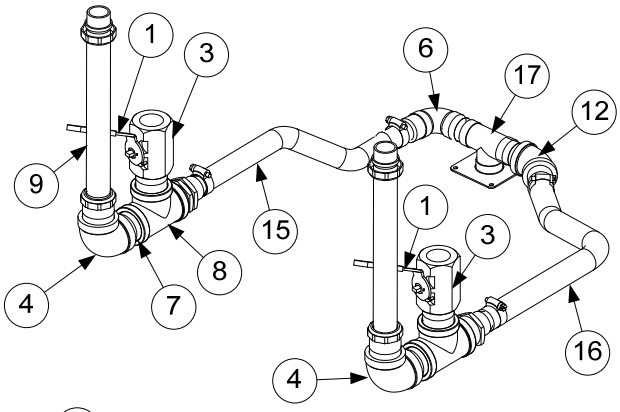

Drain Assembly, GPC/GPC
108-2153

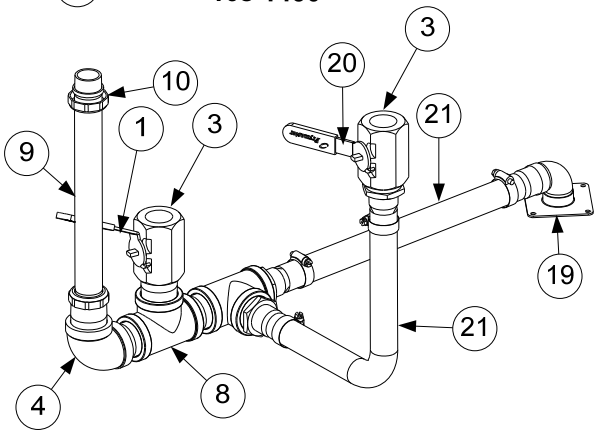

Drain Assembly, Cook/Rinse
108-1853

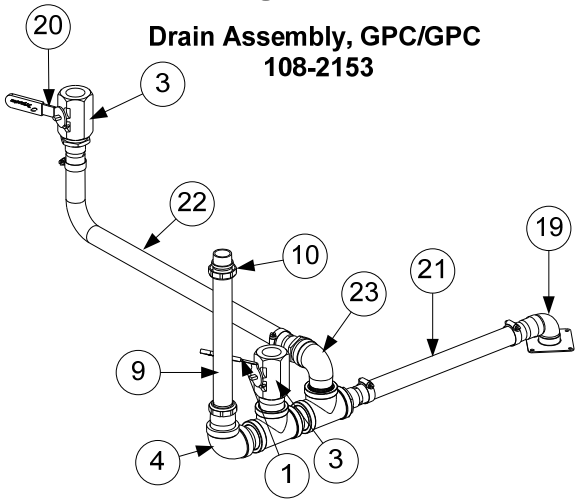

Drain Assembly, Rinse/Cook
108-1966

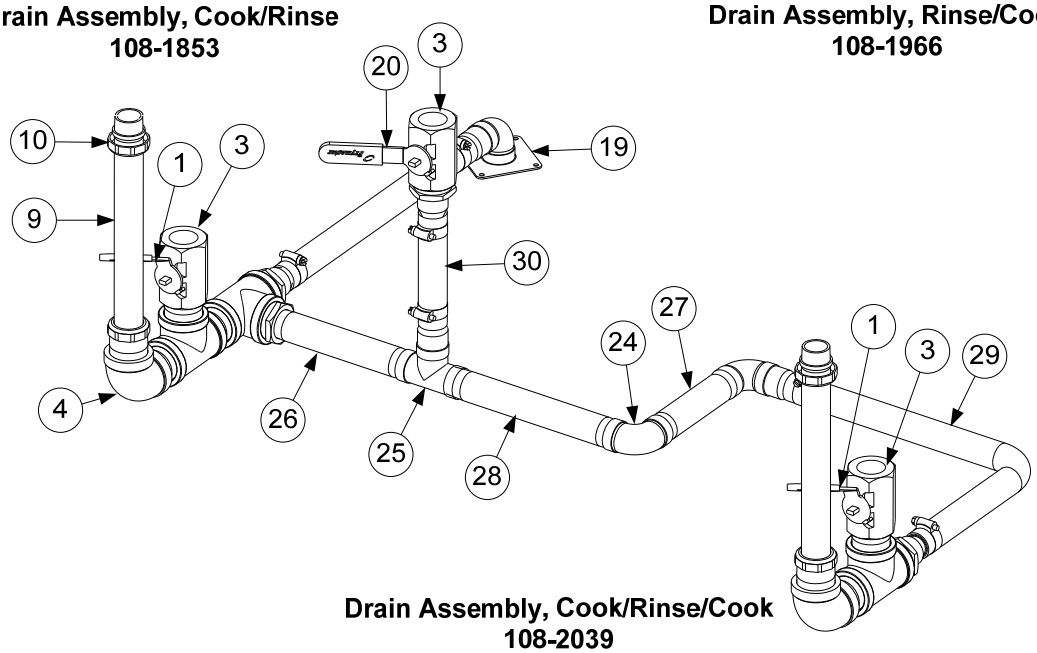

Drain Assembly, Cook/Rinse/Cook
108-2039

2.8 Drain Components cont.

ITEM	PART #	COMPONENT
1	823-7996	Handle, Drain Valve GPC
2	814-0047	Sleeve, Handle Valve Red
3	810-1825	Valve, 1¼-inch x 1¼-inch SS Drain
4	813-0070	Elbow, 1¼-inch NPT BM 90°
5	813-0138	Nipple, 1-inch NPT Close BM
6	813-0202	Elbow, 1-inch NPT BM 90°
7	813-0391	Nipple, 1¼-inch x Close NPT BM
8	813-0394	Tee, 1¼-inch BM
9	813-0451	Nipple, 1¼-inch BM x 12-inch Chrome/Brass
10	813-0453	Nut, Slip 1¼-inch Chrome/Stainless
11	813-0525	Fitting, Barb 1-inch to Hose
12	813-0709	Elbow, 1-inch 45°
13	813-0716	Bushing, 1-inch x 1¼-inch Hex BM
14	809-0374	Clamp, Hose
15	816-0880	Hose, Drain 15-inch
16	816-0881	Hose, Drain 20-inch
17	823-7865	Drain Welded Assembly, Double GPC
18	816-0852	Hose, Drain GPC 16 ½ -inch
19	823-7594	Plate, Welded Assembly, Drain Euro
20	210-0151	Handle, SS Drain Valve
21	816-0864	Hose, Drain 14-inch
22	816-0867	Hose, Drain Rinse/Cook 28-inch
23	813-0379	Elbow, Street 1¼-inch NPT BM
24	813-0202	Elbow, 1-inch NPT BM 90°
25	813-0314	Tee, 1-inch BM
26	813-0365	Nipple, 1-inch x 7 ½ -inch NPT BM
27	813-0419	Nipple, 1-inch x 6-inch NPT BM
28	813-0420	Nipple, 1-inch x 9-inch NPT BM
29	816-0372	Hose, Drain 18-inch
30	816-0874	Hose, Drain 5 ½ -inch

2.9 Gas Supply System Components

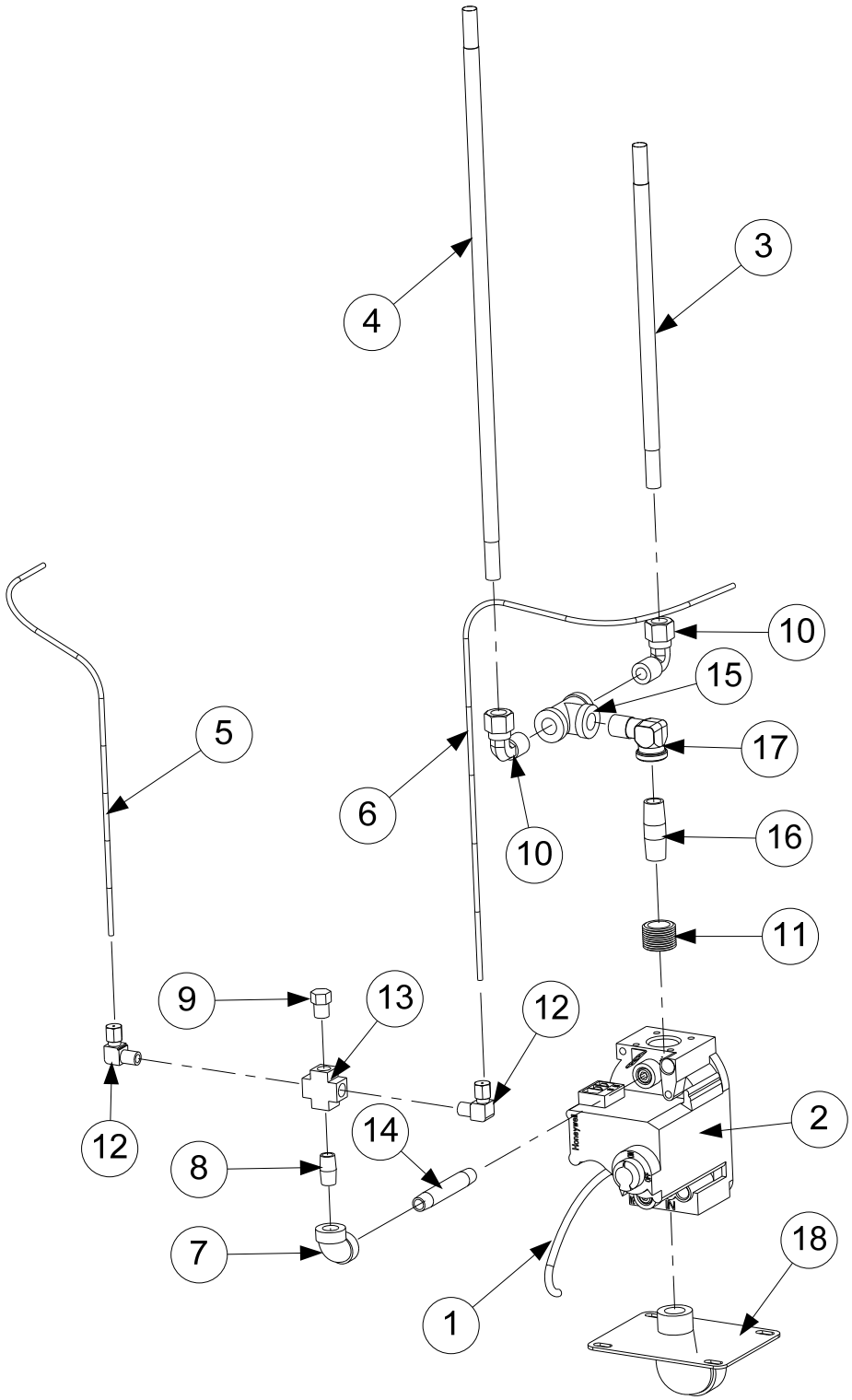

Non-CE Assembly

2.9 Gas Components cont.

ITEM	PART #	COMPONENT
1	810-0691	Tube, Vent
2		Valve, Honeywell Gas (Non-CE)
	826-1122	Natural
	826-1123	Propane Gas
3	810-1353	Flexline, ⅜-inch x 9 inch SS
4	810-1355	Flexline, ⅜-inch x 15 inch SS
5	811-0800	Tube, 12.50-inch Enrichment (See **NOTE 1**.)
6	811-1197	Tube, 18-inch Enrichment (See **NOTE 1**.)
7	813-0004	Elbow, ⅛-inch NPT 90° BM
8	813-0016	Nipple, ⅛-inch NPT x Close BM
9	813-0154	Plug, ⅛-inch Hex Head Pipe
10	813-0302	Elbow, Compresssion ¼-inch NPT x ⅜-inch Tubing
11	813-0304	Bushing, ½-inch to ¼-inch Flush BM
12	813-0354	Elbow, 90° ⅛-inch NPT x ⅛-inch Tube Brass
13	813-0378	Fitting, ⅛-inch NPT Female Cross
14	813-0433	Nipple, ⅛-inch NPT x 2.50-inch BM
15	813-0049	Tee, ¼ -inch NPT Brass
16	813-0471	Nipple, ¼-inch NPT x 1.50-inch Brass
17	813-0502	Elbow, 90° Street 250 NPT Brass
18	823-7593	Mount Welded Assembly, Gas GPC
	806-9678SP	Plug, CE Honeywell Gas Valve
*	810-1041	Kit, CE Valve Accessory
	810-1715	Valve, Honeywell CE Gas (Natural or Propane)

* Contains straight and elbow flanges, o-rings, and screws for mounting flanges to valve.

NOTE 1: Items 5 and 6 are delivered straight and must be formed by the installer to fit the unit.

2.10 Water Supply System Components

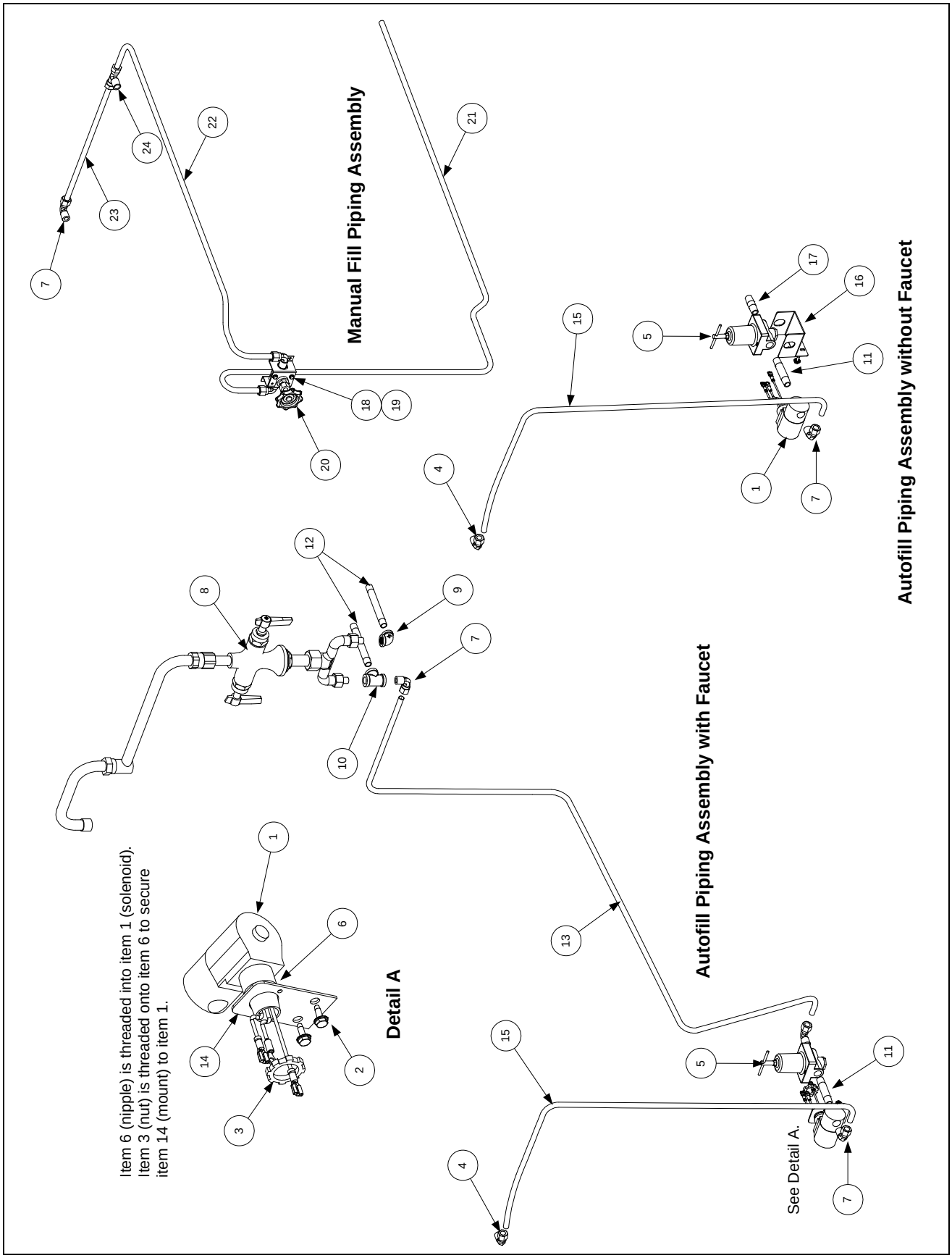

ITEM	PART #	COMPONENT
1	806-5565	Valve Assembly, Solenoid
2	826-1374	Screw, #10 x ½-inch Hex Head (Pkg. of 25)
3	809-0454	Nut, ½-inch Conduit
4	810-0907	Elbow, ⅜-inch NPT Compression
5	810-1208	Valve, Pressure Regulator
6	813-0022	Nipple, ½-inch NPT x Close BM
7	813-0302	Elbow, ¼-inch NPT x ⅜-inch Tube Compression
8	813-0412	Faucet, Double-Jointed Pantry
*	813-0516	Faucet, Cold Water Only
9	813-0448	Elbow, ¼-inch NPT Brass
10	813-0449	Tee, ¼-inch NPT Brass
11	813-0472	Nipple, ¼-inch NPT x 2.5-inch Brass
12	813-0473	Nipple, ¼-inch NPT x 4.0-inch Brass
*	810-3819	Tubing, Water Input/Faucet 18.30-inch GPC
*	810-3833	Tubing, Water Input/Faucet 29.20-inch GPCR/GPC
*	810-3818	Tubing, Water Input/Faucet 16.20-inch GPCR/GPC
13	810-3785	Tubing, Pressure Regulator to Faucet GPCR/GPCRB Cook left/ Rinse Right
*	810-3790	Tubing, Water Inlet to Faucet GPCR/GPCRB Rinse left/ Cook Right
14	900-1905	Mount, Solenoid Valve Assembly
15	810-3769	Tubing, Solenoid to Cookpot GPC/GPCB/GPCR/GPCRB
16	900-2916	Bracket, Pressure Regulator
17	813-0471	Nipple, ¼-inch NPT x 1.5-inch Brass (See **NOTE** below.)
18	200-5094	Bracket, Water Valve
	220-7295	Bracket, Water Valve (GPC Noodle's)
19	809-0359	Screw, #8 X ¼-inch Slotted Hex Washer Head
20	810-2641	Valve, ⅜-inch Water
	810-2684	Valve, ½ -inch Water (GPC Noodle's)
21	810-2648	Tube, Water Inlet
	810-3772	Tube, Water Inlet (GPC Noodle's)
22	810-2649	Tube, Water Outlet
	810-3771	Tube, Water Outlet (GPC Noodle's)
23	810-2650	Tube, Cookpot Water
	220-5387	Tube, Cookpot Water (GPC Noodle's)
24	813-0301	Tee, ¼-inch NPT Male X ⅜-inch Tube Brass

* Not illustrated.

NOTE: In Autofill units without a faucet, water supply piping to item 17 appropriate for the installation is provided by the purchaser or installer.

Shipping Address: 8700 Line Avenue, Shreveport, Louisiana 71106

TEL 1-318-865-1711 FAX (Parts) 1-318-219-7140 (Tech Support) 1-318-219-7135

SERVICE HOTLINE
1-800-551-8633

Price: $8.00
819-6692

PRINTED IN THE UNITED STATES

JAN 2013

Commercial Kitchen Equipment Parts

Find more Frymaster equipment resources at

parthubz.com/equipment/frymaster

Need parts or service?

Call 833-700-8006

support@parthubz.com

parthubz.com