Commercial Kitchen Equipment Parts

GROEN HY-6G

Groen HY-6G User Manual

Provided by PartHubz

parthubz.com

833-700-8006 | support@parthubz.com

OPERATOR MANUAL

IMPORTANT INFORMATION, KEEP FOR OPERATOR

This manual provides information for:

MODEL HY-6G(CE) HYPERSTEAM™ ATMOSPHERIC CONVECTION STEAMER

INTERNATIONAL

- Self Contained
- Gas
- Capacity: 6 Steamer Pans (12” x 20” x 2-1/2”)

THIS MANUAL MUST BE RETAINED FOR FUTURE REFERENCE. READ, UNDERSTAND AND FOLLOW THE INSTRUCTIONS AND WARNINGS CONTAINED IN THIS MANUAL.

WARNING / FOR YOUR SAFETY
Do not store or use gasoline or other flammable vapors and liquids in the vicinity of this or any other appliance.

POST IN A PROMINENT LOCATION
Instructions to be followed in the event user smells gas. This information shall be obtained by consulting your local gas supplier. As a minimum, turn off the gas and call your gas company and your authorized service agent. Evacuate all personnel from the area.

WARNING
Improper installation, adjustment, alteration, service or maintenance can cause property damage, injury or death. Read the installation, operating and maintenance instructions thoroughly before installing or servicing this equipment.

NOTIFY CARRIER OF DAMAGE AT ONCE
It is the responsibility of the consignee to inspect the container upon receipt of same and to determine the possibility of any damage, including concealed damage. Unified Brands suggests that if you are suspicious of damage to make a notation on the delivery receipt. It will be the responsibility of the consignee to file a claim with the carrier. We recommend that you do so at once.

Manufacture Service/Questions 888-994-7636.

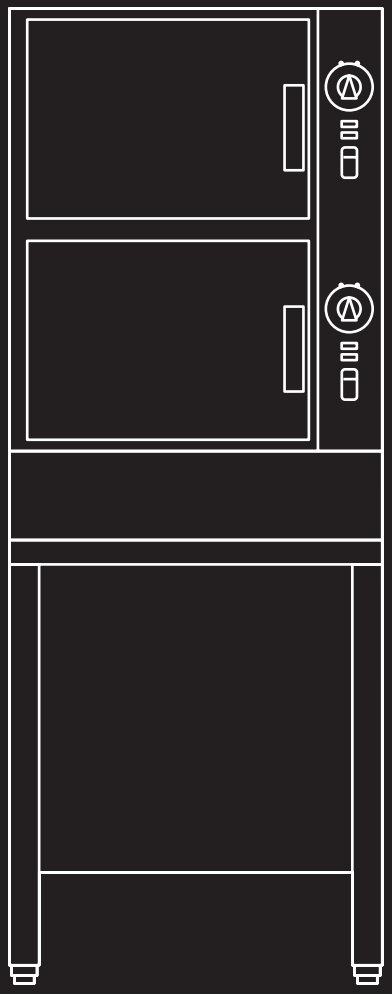

PART NUMBER 128805 REV K (12/16)

888-994-7636, fax 888-864-7636
unifiedbrands.net

IMPORTANT - READ FIRST - IMPORTANT

IT IS MOST IMPORTANT THAT THESE INSTRUCTIONS AND THE OPERATOR AND SERVICE MANUALS BE CONSULTED BEFORE INSTALLING AND COMMISSIONING THE APPLIANCE. FAILURE TO COMPLY WITH SPECIFIED PROCEDURES MAY RESULT IN DAMAGE OR THE NEED FOR A SERVICE CALL.

THESE APPLIANCES HAVE BEEN CE MARKED ON THE BASIS OF COMPLIANCE WITH THE GAS APPLIANCE DIRECTIVE, EMC AND LOW VOLTAGE DIRECTIVE FOR THE COUNTRIES, GAS TYPES AND PRESSURES AS STATED ON THE DATA PLATE.

THESE APPLIANCES MUST BE INSTALLED BY A COMPETENT PERSON IN CONFORMITY WITH THE INSTALLATION AND SERVICING INSTRUCTIONS AND NATIONAL REGULATIONS IN FORCE AT THE TIME. PARTICULAR ATTENTION MUST BE PAID TO THE FOLLOWING:

I. E. E. REGULATIONS FOR ELECTRICAL INSTALLATIONS
ELECTRICITY AT WORK REGULATIONS
GAS SAFETY (INSTALLATION AND USE) REGULATIONS
HEALTH AND SAFETY AT WORK ACT
LOCAL AND NATIONAL BUILDING REGULATIONS
FIRE PRECAUTIONS ACT

DETAILED RECOMMENDATIONS ARE CONTAINED IN INSTITUTE OF GAS ENGINEERS PUBLISHED DOCUMENTS: IGE/UP/1, IGE/UP/2, BS6173 AND BE5440.

FURTHERMORE, IS A NEED ARISES TO CONVERT THE APPLIANCE FOR USE WITH ANOTHER GAS, A COMPETENT PERSON MUST BE CONSULTED. THOSE PARTS WHICH HAVE BEEN PROTECTED BY THE MANUFACTURER MUST NOT BE ADJUSTED BY THE USER.

USERS SHOULD BE CONVERSANT WITH THE APPROPRIATE PROVISIONS OF THE FIRE PRECAUTIONS ACT AND THE REQUIREMENTS OF THE GAS SAFETY REGULATIONS. IN PARTICULAR THEY SHOULD BE AWARE OF THE NEED FOR REGULAR SERVICING BY A COMPETENT PERSON TO ENSURE THE CONTINUED SAFE AND EFFICIENT PERFORMANCE OF THE APPLIANCE.

WARNING: TO PREVENT SHOCKS, ALL APPLIANCES GAS OR ELECTRIC, MUST BE EARTHED.

UPON COMPLETION OF THE INSTALLATION, THE OWNERS MANUAL SHOULD BE HANDED TO THE USERS AND THE INSTALLER SHOULD INSTRUCT THE RESPONSIBLE PERSON(S) IN THE CORRECT OPERATION AND MAINTENANCE OF THE APPLIANCE.

THIS EQUIPMENT IS ONLY FOR PROFESSIONAL USE, AND SHALL BE OPERATED BY QUALIFIED PERSONS. IT IS THE RESPONSIBILITY OF THE SUPERVISOR OR EQUIVALENT TO ENSURE THAT USERS WEAR SUITABLE PROTECTIVE CLOTHING AND TO DRAW ATTENTION TO THE FACT THAT, SOME PARTS WILL, BY NECESSITY, BECOME VERY HOT AND WILL CAUSE BURNS IF TOUCHED ACCIDENTALLY.

WARNING: BEFORE REMOVING ANY PARTITION OR PANEL, ALWAYS TURN OFF THE ELECTRIC POWER AND ALLOW THE FAN TO STOP ROTATING. BEFORE WORKING ON ANY ELECTRICAL COMPONENT, DISCONNECT THE POWER SOURCE FROM THE UNIT.

NOTE: IT IS IMPORTANT THAT THE END-USER ROUTINELY EXAMINE THE FLUE OUTLET ON A REGULAR BASIS. DEBRIS COVERING THE FLUE OUTLET CAN CAUSE A POTENTIALLY HAZARDOUS CONDITION. REMOVE ANY FOREIGN MATERIAL BEFORE USING THIS PIECE OF EQUIPMENT.

WARNINGS AND CAUTIONS PROVIDED IN THE BASIC OPERATOR AND SERVICE MANUALS (OM-HY-6G AND GROEN HYPERSTEAM SERVICE MANUAL) MUST BE COMPLIED WITH.

Table of Contents

Important Operator Warnings ..... page 2
References..... page 3
Equipment Description..... page 4
Water Quality and Treatment ..... page 5
Inspection and Unpacking ..... page 6
Installation ..... page 7-9
Initial Start-Up..... page 10-11
Operation ..... page 12-13
Cleaning..... page 14-15
Maintenance..... page 16
Troubleshooting..... page 17
Electrical Schematic ..... page 25
Service Procedures ..... page 26-39
Service Log ..... page 40

References

UNDERWRITERS LABORATORIES, INC.
333 Pfingsten Road
Northbrook, Illinois 60062

KLENZADE SALES CENTER
ECOLAB, Inc.
370 Wabasha
St. Paul, Minnesota 55102
800 328-3663 or 612 293-2233

NATIONAL FIRE PROTECTION ASSOCIATION
60 Batterymarch Park
Quincy, Massachusetts 02269

NFPA/70 The National Electrical Code

NSF INTERNATIONAL
789 N. Dixboro Rd.
P.O. Box 130140
Ann Arbor, Michigan 48113

Equipment Description

The HY-6G (CE) has two independent cavities, each with its own base-mounted steam generator.

Your Groen HY-6G (CE) HyPerSteam Convection Steamer is designed to give years of service. It has two stainless steel cavities (cooking chambers) which are served by twin, independent atmospheric steam generators which are gas-heated. A powerful blower circulates the steam in each cavity to increase heating efficiency.

Each cavity holds up to three steam table pans (305 x 508 x 64 mm). A 1.5 mm stainless steel case encloses the cavities, the steam generators and the control compartment that houses electrical components. Door hinges are reversible (the doors may be set to open from the left or right). Operating Controls are on the front panel.

HY-6G (CE) steamers are equipped with fully electronic controls and a button-activated, pre-programmed CLEAN cycle.

The drain system includes a spray condenser, which helps keep steam from escaping down the condensate drain.

Water Quality & Treatment

The BPST Connection on the right rear side of the steamer.

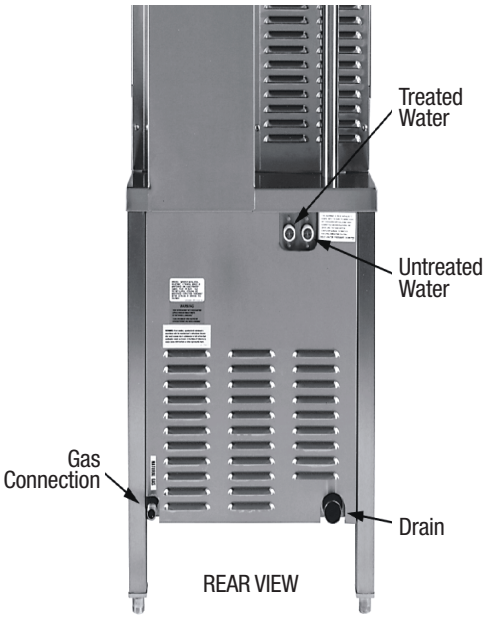

It is essential to supply the steam generator with water that will not form scale or cause corrosion. Even though the steam generator is engineered to minimize scale formation and the effects of corrosion, their development depends on the quality of your water and the number of hours per day you operate the equipment.

Most water supplies are full of minerals and chemicals which are not suitable for use in a steam generator.

Water quality varies from state to state and city to city. It is necessary that you know and understand the quality of the water you are using. Your water utility can tell you about the minerals and chemicals in your water. The water going to the steam generator should be within these guidelines

Water Pressure	30-60 psi
PH	7 to 9
Hardness	less than 60 ppm
TDS	30 to 60 ppm
Chlorine and Chloramine	less than 0.1 ppm
Total Chloride	less than 30 ppm
Silica	less than 12 ppm
Undissolved Solids	less than 5 microns

1. Do not rely on unproven water treatments which are sold for scale prevention or scale removal. They don't always work. The best way to prevent scale is to supply the purest possible water (30 - 60 ppm TDS).

2. If your water contains scale-forming minerals, as most water does, use a well-maintained water softener. Whether an exchangeable softener cartridge or a regenerating system is chosen, a regular exchange schedule is essential.

3. Installing a water meter between the softener and the steamer will provide an accurate gauge of water use, and will help determine when to exchange cartridges or regenerate the softener. Using a water softener will provide longer generator life, higher steam capacity, and reduce maintenance requirements.

4. If you notice a slowdown in steam production, have the unit checked for scale build-up. Heavy scale reduces the unit's ability to boil water and can even cause heating elements in the steam generator to overheat and burn out.

Inspection & Unpacking

CAUTION
SHIPPING STRAPS ARE UNDER TENSION AND CAN SNAP BACK WHEN CUT.

CAUTION
THIS UNIT WEIGHS 550 LBS. (250 KG). GET HELP AS NEEDED AND USE MATERIAL HANDLING EQUIPMENT TO MOVE IT.

The unit will be delivered in a heavy carton, strapped to a wooden skid.

Your HY-6G HyPerSteam will be delivered completely assembled in a heavy shipping carton and attached to a skid. On receipt, inspect the carton carefully for exterior damage.

Carefully cut the straps around the carton and detach the sides of the carton from the skid. Be careful to avoid personal injury. Strap edges may be very sharp, particularly where cut. Write down the model number, serial number and installation date. Space for these entries is provided in the Service Log at the back of this manual. Keep the manual near the equipment for reference and update as needed.

When installing, use material handling equipment to lift the unit straight up from the skid. Check packing materials for any loose parts.

Installation

WARNING
THE UNIT MUST BE INSTALLED BY PERSONNEL WHO ARE QUALIFIED TO WORK WITH ELECTRICITY AND PLUMBING. IMPROPER INSTALLATION CAN CAUSE INJURY TO PERSONNEL AND/OR DAMAGE TO THE EQUIPMENT. THE UNIT MUST BE INSTALLED IN ACCORDANCE WITH APPLICABLE CODES.

CAUTION
DO NOT INSTALL THE UNIT WITH THE RIGHT SIDE VENTS BLOCKED OR WITHIN 30 CENTIMETERS OF A HEAT SOURCE (SUCH AS A BRAISING PAN, DEEP FRYER, CHAR BROILER, OR KETTLE). TO AVOID DRAINAGE PROBLEMS, LEVEL THE UNIT FRONT TO BACK, OR PITCH IT SLIGHTLY TO THE REAR.

CAUTION
THE UNIT MUST HAVE A SEPARATE EARTHING WIRE FOR SAFE OPERATION.

MODEL	WIDTH mm (in)	DEPTH mm (in)	HEIGHT mm (in)	WEIGHT Kg (lbs)
HY-6G(CE)	549 (21.6)	894 (35.2)	1464 (57.6)	193 (425)

The HY-6G(CE) steamer is suitable for installation in combustible and noncombustible locations. Minimum clearances for installation are:

Right Side	300 mm (12 inches)
Left Side	0 mm (0 inches)
Rear of Flue	150 mm (6 inches)

However, for easy service at least 300 mm (12 inches) clearance is required for the right side of the unit, and it may not be installed within 300 mm (12 inches) of a heat source, as stated in the Caution above.

The unit must be installed in a well-ventilated room with an adequate air supply. The steamer must be installed beneath a ventilation hood, since gas combustion products exit the appliance.

Any item which might obstruct or restrict the flow of air for combustion and ventilation must be removed. Do not obstruct the flue cover or any front, side, rear, or top vents after installation.

The area directly around the appliance must be cleared of all combustible material. The installation must conform with local codes or, in the absence of local codes, with the National Fuel Gas Code, ANSI Z223.1, latest edition, including the following:

The unit and its individual shutoff valve must be disconnected from the gas supply system during any pressure testing of that system at test pressures in excess of ½ PSI (3.45 kPa). It must be isolated from the gas supply piping system by closing its individual manual shutoff valve during any pressure testing of the gas supply piping system at test pressures equal to or less than ½ PSI (3.45 kPa).

1. **Electrical Supply Connection**
   The unit is designed for connection to fixed wiring. A suitably rated isolating switch with contact separation of at least 3 mm on both poles must be fitted to the installation. Wiring must be executed in accordance with the regulations listed on page 2 of this manual.

   Cable entry is at the bottom rear right side of the appliance. To gain access the panel must be removed. Open the lower front panel by removing its screws. Lift the panel and swing its bottom toward you. Set the panel aside.

   Provide 230 Volt, 50 Hz, Single Phase, 15 Ampere service. Maximum load is 2½ amps. The electrical schematic is located in the service compartment. A copy is also printed at the rear of this manual.

2. **Gas Supply Connection**
   Incoming service must be of sufficient size to supply full rate without excessive pressure drop. A gas meter is connected to the service pipe by the Gas Supplier. Any existing meter should be checked out by the Gas Supplier to ensure that it has adequate capacity to provide the required rate of gas to the steamer, in addition to any other equipment.

GAS INPUT RATE BTU/HR & KW		
HY-6G(CE)	Natural Gas 9.25 mBar (3.7 in. W.C.)	Propane Gas 26.25 mBar (10.5 in. W.C.)
Individual Steamer Cavity	40,905 BTU/hr 12 KW	40,905 BTU/hr 12 KW
Total: Both Cavities	81,900 BTU/hr 24 KW	81,900 BTU/hr 24 KW

Installation pipe work must be fitted in accordance with IGE/UP/2.

The appliance governor is suitable for both natural and propane gas without conversion. The governor is incorporated in the gas control valve, which is inside the control cabinet.

Connection to the gas supply can be completed with ½" B.S.P.T. pipe. Although the immediate connection to the appliance is ½" B.S.P.T., gas supply piping must be large enough to provide 90,000 BTU/hour. Minimum supply pressure must be 20 mBar for natural gas, or 37 mBar for propane gas.

An isolating cock must be located close to the appliance to allow shut down in an emergency, or for servicing. The installation must be tested for gas soundness and purged as specified in IGE/UP/1.

3. Gas Pressure Adjustment

Gas pressure has been set at the factory but should be checked by connecting a manometer to the pressure tap on the burner manifold. The adjusted gas pressures is shown in the table below.

G20 NATURAL GAS		G31 PROPANE GAS	
mBar	Inch W.C.	mBar	Inch W.C.
9.25	3.7	26.25	10.5

If necessary, the gas pressure may be readjusted as described in the Service Manual.

NOTE: With reference to gas rate, pressure adjustments and conversions, this appliance is CE-approved for use with C20 natural gas and G31 propane gas in Ireland and the United Kingdom.

Use of the appliance with non-approved gases in a listed country, or use in other countries, will void CE certification.

4. Injector Diameters

	NATURAL GAS		PROPANE GAS	
	Injector Dia. (mm)	No. of Injectors	Injector Dia. (mm)	No. of Injectors
Main Burner	1.49	4 x 2	0.94	4 x 2
Standby Burner	0.99	1 x 2	0.57	1 x 2
Pilot Burner	0.60	1	0.25	1

Gas input is through a ½ inch B.S.P.T connection at the left rear of the unit.

CAUTION
DO NOT USE PLASTIC PIPE. THE DRAIN MUST WITHSTAND HOT WATER.

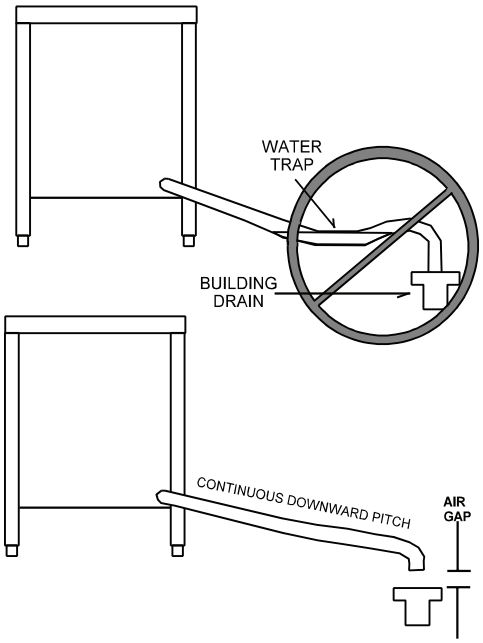

5. **Burner Air Adjustment**
The unit is equipped with fixed aeration type burners which have no provision for air inlet adjustment.

6. **Equipotential Terminal**
In accordance with national regulations, each unit is fitted with an equipotential terminal.

7. **Water Supply Connection (Treated Water)**
The HY-6G CE model is fitted for two 3/4 inch B.S.P.T. cold water connections. The water supply must be provided at a rate of not less than 2.7 liters (0.70 gallons) per minute. Pressure must be 2.0 to 4.0 Bar (30 to 60 PSI) maximum.

Water quality minimums require totally dissolved solids (T.D.S.) of 30 parts per million maximum, and a water pH of 7.0 or greater. If the available water supply fails to meet these requirements, water treatment equipment must be provided to ensure steamer reliability and operating life.

Install a WRAS approved double-check valve or an equally effective back-flow preventive device in the incoming cold water line at the point of connection(s) to the steamer and in compliance with all local plumbing codes. This installation must be per WRAS-IRN R160 Schedule 2-15(1). For units with the dual water connection option, a double-check valve shall be installed on each water line.

Do not allow the connection to have any leak, regardless of how small.

8. **Untreated Water Second Connection**
As discussed previously, the flow of water used for steam suppression in the drain is much greater than the amount of water used to generate steam. The second connection on steamers (see illustration under “Water Quality & Treatment” section) permits the installer to supply treated water to the steam generator and untreated water to the drain. With “split water” feature, the initial fill requirement for treated water is 3.5 U.S. gallons (19 L) within 2.5 minutes. The requirement for treated makeup water is 0.12 gallon (0.45 L) per minute per cavity. A field retrofit kit is available for single water connection if required.

9. **Drain Connection**
The HY-6G (CE)Steamer must be leveled front to back. A 38mm (1½ inch) ID hose may be attached to the drain pipe (supplied) by means of a hose. DO NOT CONNECT THE HOSE DIRECTLY TO A BUILDING DRAIN. There must be a free air gap between the end of the hose and the building drain. The free air gap should be as close as possible to the unit drain. There must also be no other elbows or other restrictions between the unit drain and the free air gap.

Install the drain line with a constant downward pitch.

IMPORTANT: Do not allow any water traps in the line. A trap can cause pressure to build up inside the cavity during steaming, which will make the door gasket leak.

Initial Start-Up

WARNING
WHEN YOU OPEN THE DOOR, STAY AWAY FROM STEAM COMING OUT OF THE UNIT. THE STEAM CAN CAUSE BURNS.

After the HY-6G(CE) Steamer has been installed, test it to ensure that the unit is operating correctly.

1. Remove all literature and packing materials from the interior and exterior of the unit.

2. Make sure the water supply line is open.

3. Make sure that the gas supply line is open and that the manual knob on the main gas valve is turned to the "on" position. This valve is located behind the front access panel on the right side of the unit.

4. Turn on electrical service to the unit. The HY-6G(CE) will not operate without electrical power. Do not attempt to operate the unit during a power failure.

5. The steamer will not operate until the pilot burner has been ignited. To light the pilot burner, activate the pilot switch located at the lower front, next to the main gas valve. When the pilot ignition sequence has been successful, a green light on the pilot switch will glow.

6. The "trial for ignition" period is roughly 90 seconds. If the pilot burner does not light within about 90 seconds after the switch is activated, the ignition system automatically stops gas flow to the pilot burner and stops the ignition trial. If this happens, turn off the pilot switch and repeat the trial for ignition. During the initial start-up, the pilot may require several trials for ignition until all the air is bled from the gas piping. Subsequent start-ups should require only about 5 seconds to achieve pilot ignition. Reinstall panel(s). NOTE: See Automatic Operation of Pilot at the end of this section.

7. Once the pilot burner flame has been established (the green light on the electrical panel is on), press the ON/OFF touch pad for the desired steamer cavity. The steam generator will fill with water.

   NOTE: The door MUST be closed for the main (high) burner to work.

8. When the steam generator has filled with water, the main and low burners will ignite automatically. Within 6-8 minutes the READY light will come on, indicating that the water has reached its standby temperature. When the READY light is displayed, you may take any one of the following steps:

   a. Set the timer to the desired time for timed steaming.
   b. Turn the timer knob to the manual ON position for continuous steam.
   c. Let the unit stay at standby temperature.

9. To shut down the unit, press the ON/OFF touch pad into the off position. The steam generator will then drain. You may also switch off the pilot switch to conserve energy.

10. If the HY-6G(CE) Steamer behaves as described, the unit is functioning correctly and ready for use.

11. **Automatic Operation of Pilot**
Once the pilot burner is lit, it essentially functions as a standing pilot. In this state, if the pilot is accidentally extinguished (by a very strong gust of wind for example), it will re-ignite automatically. The unit will completely shut down for a few seconds while the pilot is re-ignited.

Then the unit will come back on and resume operation in the mode and with the (running) timer value existing just prior to shutdown. The pilot switch may be turned off during “off hours” to conserve energy.

After the unit has been running, if the pilot burner ever fails to re-ignite automatically within 90 seconds, wait 5 minutes before you attempt to reactivate it. In the unlikely event that ignition problems persist, contact your authorized Groen Service Agency.

NOTE: For operation at high altitudes (2000 feet and above) please consult the Groen Food Service Engineering Department.

12. **Gas Type Conversion** (See Paragraph 3 on page 9 for important information for gas conversion. Verify the type of gas to be used).

To change the type of gas used (e.g. G20 to/from G31) change the following: Burner injector, Pressure setting on Main Gas Valve, Data plate, Gas pressure Regulator Springs

The governor spring does not need to be changed; only the pressure setting.
ALL CONVERSIONS MUST BE FOR APPROVED GAS IN THE COUNTRIES LISTED IN PARAGRAPH 3 ON PAGE 9.

Operation

WARNING
ANY POTENTIAL USER OF THE EQUIPMENT SHOULD BE TRAINED IN SAFE AND CORRECT OPERATING PROCEDURES.

WARNING
WHEN YOU OPEN THE DOOR, STAY AWAY FROM THE STEAM COMING OUT OF THE UNIT. THE STEAM CAN CAUSE BURNS.

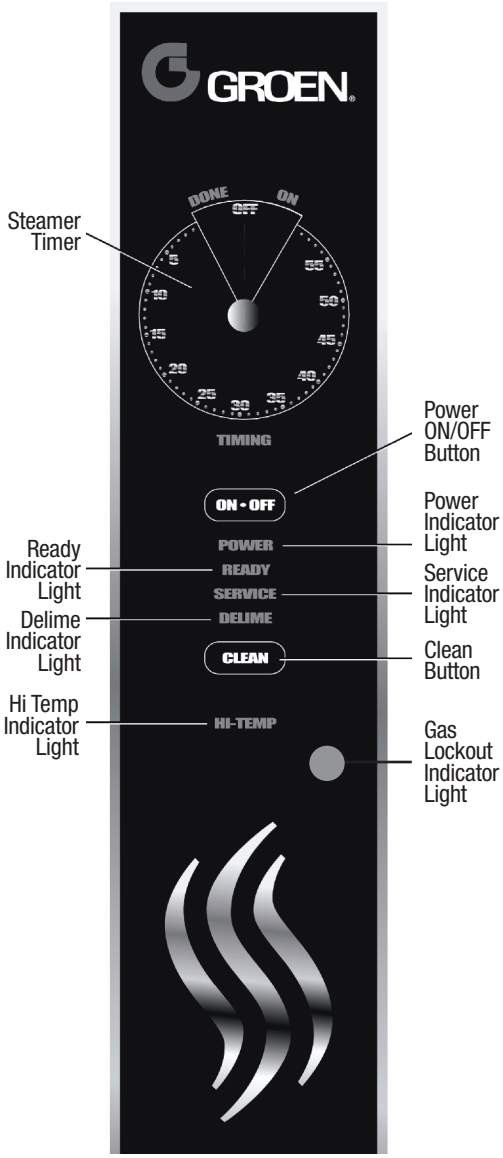

A. Controls

Operator controls are on the front right of the unit. The control panel has the following touch pads and indicator lights. (Your controls may have either words or the symbols shown below):

- The ON/OFF touch pad gets the HyPerSteam ready for use, or shuts it off.
- The READY indicator light shows that the steam generator is at standby temperature and the cavity is hot enough to begin steaming.
- The CLEAN indicator lights when the unit is operating in the cleaning mode.
- The SERVICE indicator light shows when the water level probes have stopped working, and need to be cleaned (normally an indication of lime deposits).

  When one probe is not working, the SERVICE light flashes briefly every few seconds. When both probes fail, the light will flash continuously and the beeper will sound.
- The HI TEMP indicator light comes on when the steam generator is too hot. The unit will automatically shut off, and cannot be turned on again until it has been serviced.
- The CLEAN touch pad is used to start the automatic 50 minute cleaning cycle.

The timer is used in three ways:

1. In the OFF position the steam generator stays at a low boil or “holding” temperature.

2 When a cook time is set, the unit steams until the timer reaches OFF. The steaming stops, a red light comes on and a beeper sounds.

3 With the timer turned to the ON position, the unit steams continuously. The green light stays lit. The steamer will not time down.

Gas Lockout Indicator and Reset Control:
Should the pilot fail to ignite during start-up, a yellow indicator on the control panel (see page 11) will light and the supply of gas to the unit will be halted.

When this occurs, the ignition process may not be started again for five minutes. After that time, press the Lockout Reset Switch located behind the front panel and attempt to start the unit again. If the lockout continues to occur after three attempts, contact your Groen Service Agency for assistance.

B. Operating Procedure

1. Press the ON/OFF touch pad for the steamer. The steam generator will fill, and heat until the READY light comes on. (About 10 minutes.)

Operation

WARNING
WHEN YOU OPEN THE DOOR, STAY AWAY FROM THE STEAM COMING OUT OF THE UNIT. THE STEAM CAN CAUSE BURNS.

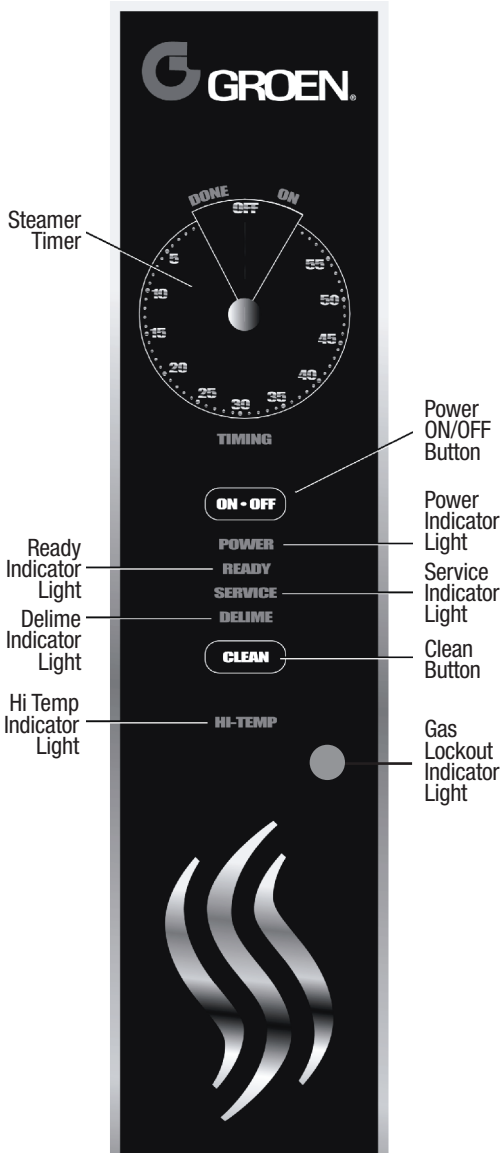

2. Load food into pans in uniform layers. Pans should be filled to about the same levels, and be even on top. The maximum allowable weight of food is 9.8 kilograms (21.6 lbs.) per pan.

3. Open the door and slide the pans onto the supports. If you will only be steaming one pan, put it in the middle position.

4. Close the door. With the READY indicator lit, take one of the following steps:
   - If you want to steam the food for a certain length of time, set the timer for that period. The timer will automatically run the steamer for the set time and then turn it off. A red light will come on and a beeper will sound. Steam production stops.
   - To steam continuously, turn the timer to the manual ON position. A green light will come on. The unit will continue steaming until you stop it by turning the timer to OFF. When steaming continuously YOU MUST CONTROL STEAMING TIME.

5. Open the door. Remove the pans from the steamer, using hot pads or oven mitts to protect your hands from the hot pans.

6. To shut down the unit, press the ON/OFF touch pad OFF. The steam generator will drain.

Cleaning

WARNING
DISCONNECT THE POWER SUPPLY BEFORE CLEANING THE OUTSIDE OF THE STEAMER.

KEEP WATER AND CLEANING SOLUTIONS OUT OF CONTROLS AND ELECTRICAL COMPONENTS. NEVER HOSE OR STEAM CLEAN ANY PART OF THE UNIT.

DON'T MIX DE-LIMING AGENTS (ACID) WITH DE-GREASERS (ALKALI) ANYWHERE IN THE UNIT.

AVOID CONTACT WITH ANY CLEANERS, DE-LIMING AGENT OR DEGREASER AS RECOMMENDED BY THE SUPPLIER. MANY ARE HARMFUL. READ THE WARNINGS AND FOLLOW THE DIRECTIONS!

EVEN WHEN THE UNIT HAS BEEN SHUT OFF, DON'T PUT HANDS OR TOOLS INTO THE COOKING CHAMBER UNTIL THE FAN HAS STOPPED TURNING.

DON'T OPERATE THE UNIT UNLESS THE TWO REMOVABLE INTERIOR PARTITIONS HAVE BEEN PUT BACK IN THEIR PROPER LOCATIONS.

DON'T USE ANY CLEANING OR DELIMING AGENT THAT CONTAINS ANY SULFAMIC AGENT OR ANY CHLORIDE, INCLUDING HYDROCHLORIC ACID (HCl). TO CHECK FOR CHLORIDE CONTENT SEE ANY MATERIAL SAFETY DATA SHEETS PROVIDED BY THE CLEANING AGENT MANUFACTURER.

IMPORTANT
DO NOT USE ANY METAL MATERIAL (SUCH AS METAL SPONGES) OR METAL IMPLEMENT (SUCH AS A SPOON, SCRAPER OR WIRE BRUSH) THAT MIGHT SCRATCH THE SURFACE. SCRATCHES MAKE THE SURFACE HARD TO CLEAN AND PROVIDE PLACES FOR BACTERIA TO GROW. DO NOT USE STEEL WOOL, WHICH MAY LEAVE PARTICLES IMBEDDED IN THE SURFACE WHICH COULD EVENTUALLY CAUSE CORROSION AND PITTING.

To keep your HY-6E Steamer in proper working condition/order, use the following procedure to clean the unit. This regular cleaning will reduce the effort required to clean the steam generators and cavities.

A. Suggested Tools

a. Mild detergent
b. Stainless steel exterior cleaner such as Zepper®
c. Steam generator de-liming agent, such as Groen Delimer Descaler, or an equivalent. A liquid de-liming agent will be easier to use than crystals or powders. See the warning about chlorides, below
d. De-greaser, such as EncompasS®, Malone 34®, Puritan Puribrute®, or Con-Lie®
e. Cloth or sponge
f. Plastic wool or a brush with soft bristles
g. Spray bottle
h. Measuring cup
i. Nylon pad
j. Towels
k. Plastic disposable gloves
l. Funnel

B. Procedure

1. Outside

   a. Prepare a warm solution of the mild detergent as instructed by the supplier. Wet a cloth with this solution and wring it out. Use the moist cloth to clean the outside of the unit. Do not allow freely running liquid to touch the controls, the control panel, any electrical part, or any open louver.

   b. To remove material which may be stuck to the unit, use plastic wool, a fiber brush, or a plastic or rubber scraper with a detergent solution.

   c. Stainless steel surfaces may be polished with a recognized stainless steel cleaner such as Zepper®.

2. Steam Generator and Cooking Chamber
   The steamer cavity and steam generator may be cleaned separately. When cleaning is scheduled, or if the SERVICE light is on, follow these simple deliming instructions. REMEMBER: DON'T ALLOW DE-LIMING AGENTS TO MIX WITH DEGREASERS.

   a. Set the timer to OFF position.

   b. Turn off the steamer for five minutes.

   c. Open the door and allow the cavity to cool.

   d. After the cavity has cooled five minutes, make sure that the fan has stopped and remove the fan baffle partition by lifting it up and toward the center of the cavity.

The process for de-liming your HY-6G (CE) Steamer is simple, tool-less and quick.

Once the cavity has cooled down, reach-in and remove the fan baffle partition by lifting it upward and drawing it toward the center of the cavity.

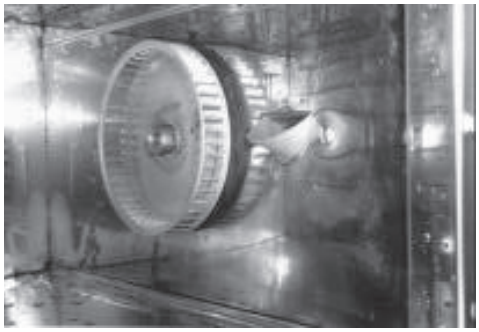

Pour 500 ml of Groen de-liming solution or Lime-Away® into the de-liming port.

e. Wipe out the cavity. Make sure the drain holes at the back of the cavity are clear of debris.

f. Hold down the CLEAN button while turning the steamer on. Continue holding it until the CLEANING indicator light comes on. Then release the button. After five minutes, the beeper will begin to beep rapidly. This is the signal to add 500 ml per cavity of Groen De-limer De-Scaler (P/N 114800), Lime-Away® or equivalent as shown at right. Do not use any delimer that contains chlorine.

g. Replace fan baffle partition and close door.

h. The cleaning cycle consists of a boiling clean stage, a soak stage, and a rinse stage. The full cycle takes about 50 minutes to complete.

i. WEAR PROTECTIVE GLOVES AND EYE PROTECTION FOR THIS STEP. When the steamer beeper sounds, turn off the steamer and open the door. After the fan has stopped, remove the fan baffle partition and rinse it well in a sink. Wipe out the cavity completely. If necessary, use a damp nylon pad.

j. Reinstall the fan baffle.

k. If the steamer will no longer be used, leave it off. Otherwise, wait 10 minutes and turn it back on. When the READY light comes on, the steamer is ready for operation.

B. If the SERVICE light stays on:

1. Check that the water supply is on and that the supply hose is not kinked. With the problem corrected, turn the steamer off or 10 seconds and then re-start.

2. Repeat steam generator cleaning.

Maintenance

NOTE
THE UNIT CONTAINS NO FUSES THAT SHOULD BE REPLACED BY THE OPERATOR.

The HY-6G(CE) Steamer is designed for minimum maintenance, and no user adjustments should be necessary. Certain parts may need replacement after prolonged use. If there is a need for service, only Groen personnel or authorized Groen representatives should perform the work.

Always supply water with a low mineral count that meets the standards outlined in the Water Quality & Treatment section of this manual.

If steam or condensate is seen leaking from around the door, take the following steps:

1. Check the door gasket. Replace if it is cracked or split.

2. Inspect the cooking chamber drain to be sure it is not blocked.

3. Adjust the latch pin to allow for changes that might occur as the gasket ages.
   a. Loosen the lock nut at the base of the latch pin. Turn the latch pin ¼ turn clockwise, and re-tighten the lock nut.
   b. After adjustment, run the unit to test for further steam leakage.
   c. If there is still leakage, repeat the adjustment.
   d. Continue adjusting the pin clockwise until the door fits tightly enough to prevent leakage.

Troubleshooting

This Groen Steamer is designed to operate smoothly and efficiently if properly maintained. However, the following is a list of checks to make in the event of a problem. Wiring diagrams are furnished inside the service panel. If an item on the check list is marked with (X), it means that the work should be done by a factory-authorized service representative.

SYMPTOM	WHO	WHAT TO CHECK
Pilot will not light.	User	a. Are electrical connections made with a ground? b. Is gas supply connection made? c. Is pilot ignition switch on? d. Is gas valve turned on? e. Are building fuses or circuit breakers all right? f. Are there drafts which could blow out the pilot?
	Authorized Service Rep Only	g. Is spark ignition cable connected to module? X
Steam generator does not fill with water.	User	a. Is the ON/OFF touch pad depressed? b. Is the water supply connected? c. Is the water turned on? d. Check for low water pressure (less than 210 kPa or 30 PSI). e. Is the screen at the water connection clogged? f. Has the steam generator been delimed?
No steam.	User	a. Is the ON/OFF touch pad depressed? b. Is the water supply connected? c. Is the water turned on? d. Are steamer doors open? e. Is the steam generator limed up?
Red light comes on after four minutes.	User	a. Is the water supply connected? b. Is the water turned on? c. Has the unit been delimed? (Refer to Cleaning Section)
Excessive steam escaping from rear of unit.	User	a. Is the water spray hose kinked or obstructed?
	Authorized Service Rep Only	b. Is the water spray solenoid connected? X c. Is the drain properly vented? X

Parts List
External Cabinet & Sheet Metal

Key	Description	Part #
1	Lower Side Panels	141291
2	Lower Front Panel	141289
3	Adjustable Table Leg	042505
4	Door Assembly	130858
5	Door Handle	129723
6	Door Gasket	124849
7	Left Pan Rack	094148
8	Blower Cover/Rack	096788
9	Door Locking Pin	078914
9a	Door Pin Lock Nut	003823
10	Timer Knob	123100
11	Mylar Overlay Plate	123128
12	Vent Pipe	141346
13	Upper Right Side Panel	139941
14	Lower Back Panel	139945
15	Sink Drain Fitting	099943
16	Upper Left Panel	139942
17	Top Panel	143116
18	Flue Cover	096765
19	Flue	096854
20	Back Panel	-
21	Timer	100983
22	Equipotential Terminal Assy.	122021
23	Water Supply Adapter Assy.	122144
24	Gas Lockout Indicator Light	122122
25	BSPT to NPT Adapter	116392

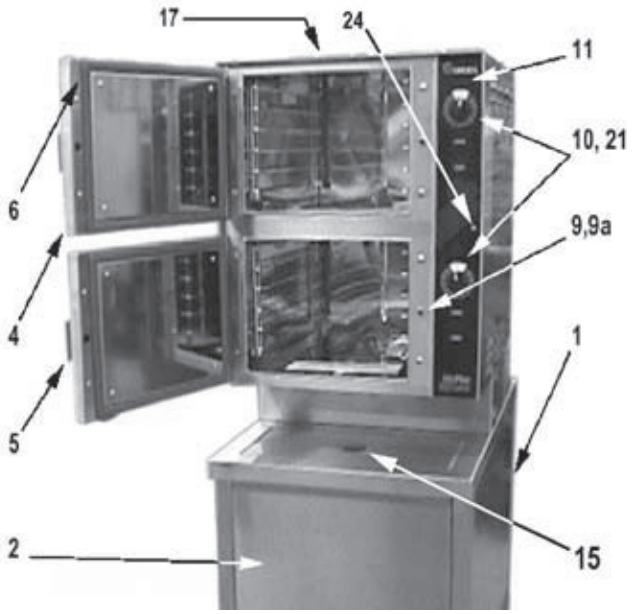

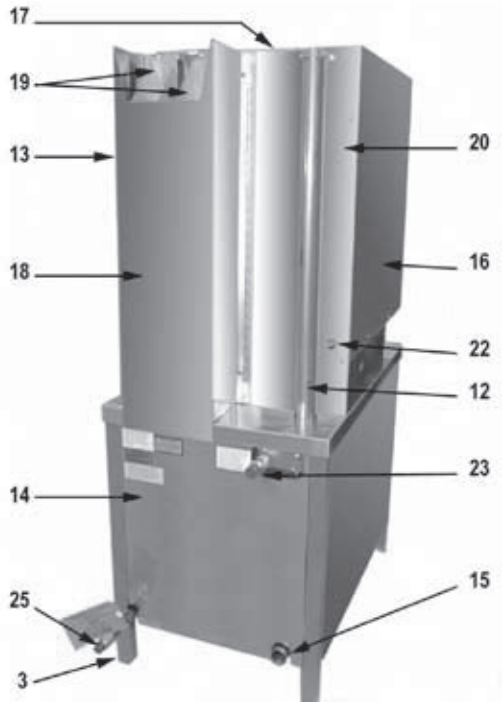

Parts List
Cavity Control Section

Key	Description	Part #
1	Top Cover Clip	123156
2	Timer	100983
x	Door Switch	096857
4	Ready Thermostat	088865
5	Steam Port	088874
6	Steam Port Gasket	099250
7	Steam Hose, Top	099953
8	Steam Hose, Bottom	088880
9	1-3/8” Hose Clamp	127525
10	Fan Motor	096740
11	Motor Capacitor, 3 MFD	096813
12	Cover, Control Panel	128800
13	Steamer Control PC Board	137221
14	Transformer	119815
15	Timer Board	119817
16	Top Cavity Drain Hose	088847
x	Bottom Cavity Drain Hose	088846

x = not shown

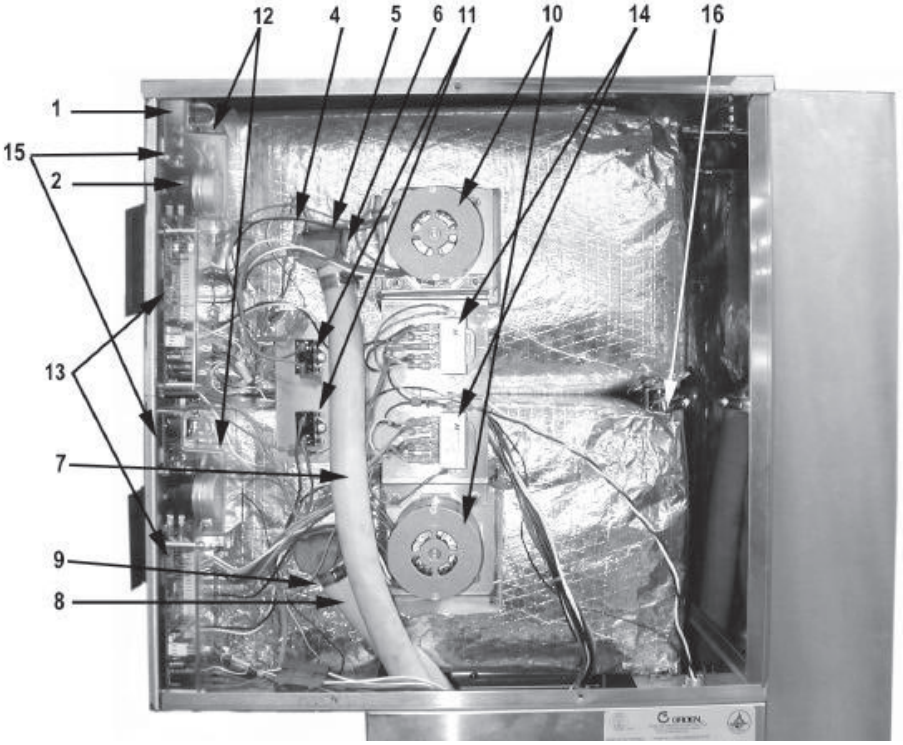

Parts List
Steamer Base Section

Key	Description	Part #
1	Terminal Block	003887
2	Cover, Housing	128766
3	Relay, 12V DC	119813
4	Water Level Probes	141424
5	Relay, 24V DC	119814
6	Reset Relay 24VAC	074842
7	Transformer 100 VA, 240V	146011
8	Controller, Pilot Ignition	154059
9	Gas Pilot Switch, Rocker	087951
10	Reset Switch, Pushbutton	122003
11	Circuit Breaker, 10 Amp	119860
12	Lug, Ground	119829
13	Main Gas Valve	122158
14	Regulator	100513
15	Steam Generator Assy. LH	094128
16	Steam Generator Assy. RH	123655

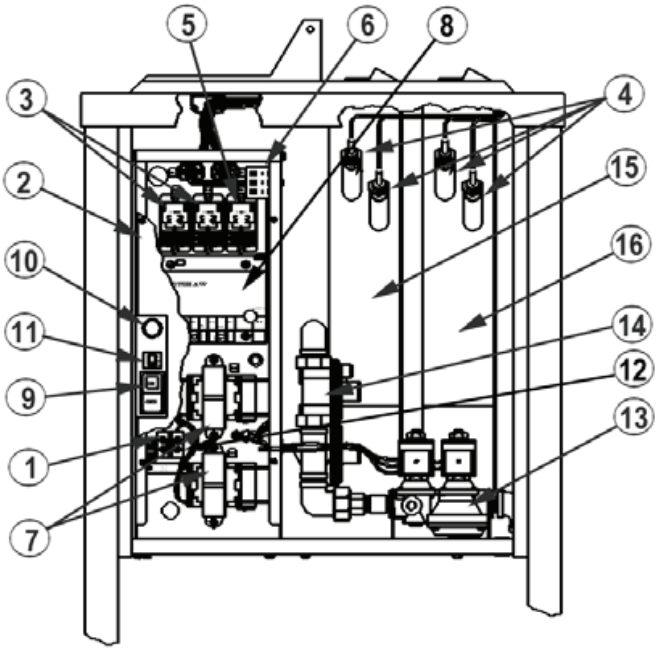

Key	Description	Part #
1	Gas Valve, 24V	122120
2	1/2” Tubing	123707
3	3/8” Tubing	096712
4	Heat Shield	123711
5	1/2” Tubing	123475
6	3/8” Tubing	123706
7	1/4” Tubing, Pilot	122140
8	Manifold Fitting Assembly	123705
9	Manifold Fitting Assembly	123704
10	Regulator	100513
11	Adjustable Foot	042505
12	Over Temperature Sensor	096892

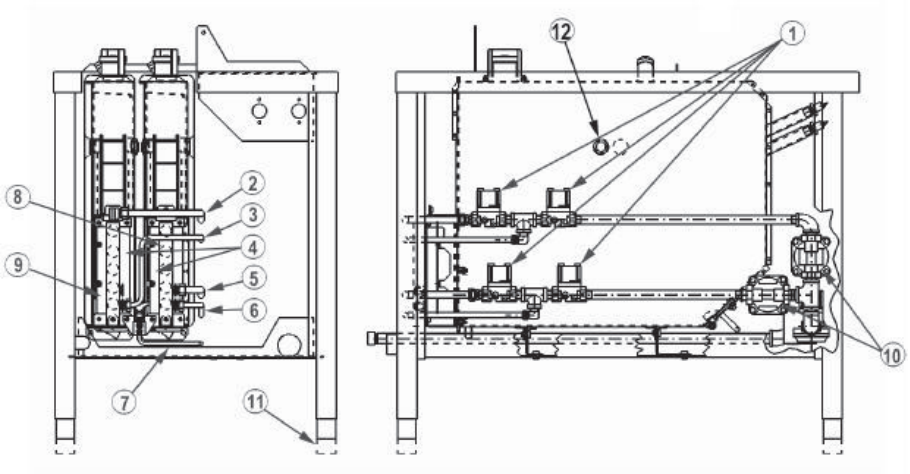

Parts List
Steamer Plumbing

Key	Description	Part #
1	Water Inlet Valve Condensate Cooling (untreated water)	100934
2	Hose, PVC, Clear	099915
3	Hose, Condensate	096771
x	Drain Kit	127393
5	Water Inlet Hose	096772
6	Water Inlet Hose Clamp	127522
7	Water Inlet Adapter Assy (BSPT)	122144
8	Steam Gen Drain Valve	071234
9	Outer Gen Drain Hose	099911
10	Inner Gen Drain Hose	099912
11	Gen Drain Hose Clamps	095656
12	Drain Box	096791
13	Drain Box Flap	099213
14	Drain Box Cover	096792
15	Top Cavity Drain Hose	088847
16	Bottom Cavity Drain Hose	088846
x	Cavity Drain Hose Clamp 21/4”	073259
18	Vent Pipe	096855
19	Water Inlet Valve 2-Way (treated water)	071235
x	Water Inlet Valve 3-Way (on units manufactured prior to 10/2010)	090827

x = not shown

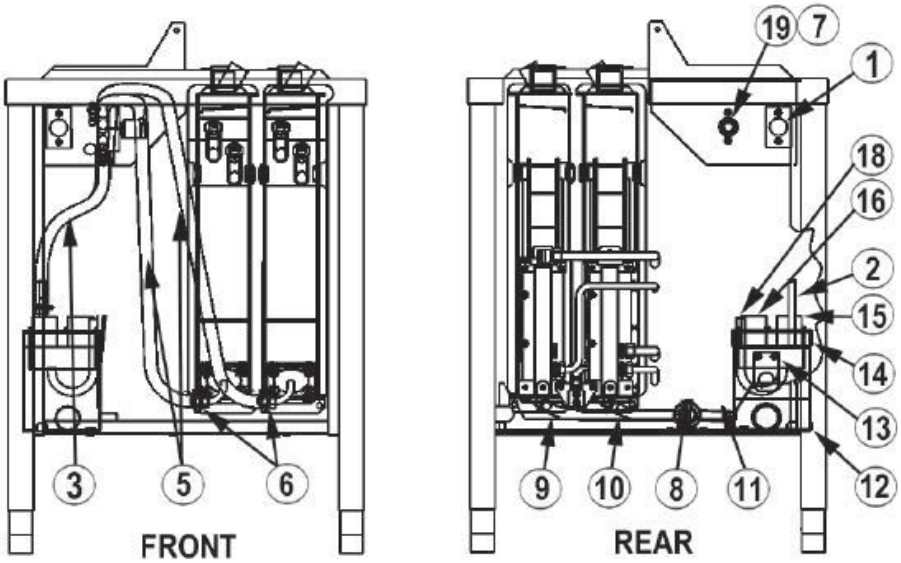

Parts List
Steamer Motor & Controls

Key	Description	Part #
1	Fan Motor	096740
x	Timer Fastener Nut	101145
3	Motor Shaft Seal	096868
4	Motor Insulator	094135
5	Fan	096790
6	Timer 50 Hz	100983
7	Timer Knob	123100
8	Door Switch	096857
9	Steam Port Kit*	118102
10	Ready Thermostat	088865
11	Steam Port Gasket	099250

x = not shown
* = includes thermostat and steam port gasket

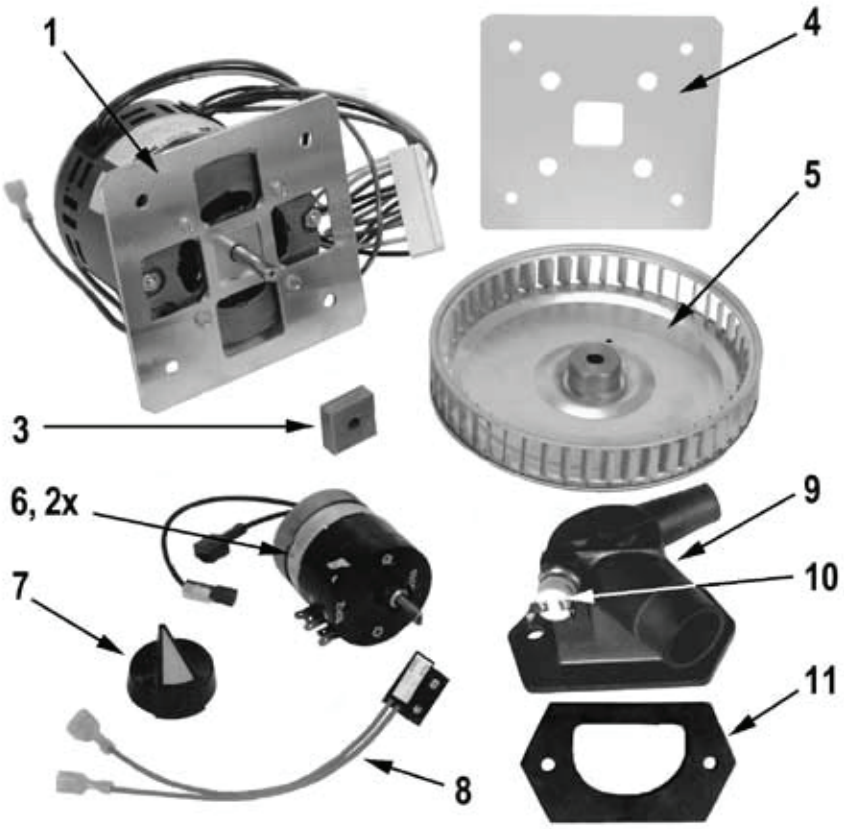

Parts List
Steam Generator - Individual Parts

Key	Description	Part #
1	Steam Gen Weldment, Inner Steam Gen Weldment, Outer	094128 123655
x	Right Steam Gen. Insulation	096896
x	Left Steam Gen. Insulation	096770
4	Safety Valve	106392
5	Drain Box Spray Nozzle	081670
6	Water Level Probe	141424
7	Top Cavity Drain Hose	088847
8	Bottom Cavity Drain Hose	088846
9	Top Steam Hose	099953
10	Sink Drain Hose	099915
x	Water Inlet Hose	096772
12	Inner Steam Generator Drain Hose	099912
13	Outer Steam Generator Drain Hose	099911
14	Condensate Hose	096771
15	Bottom Steam Hose	088880

x = not shown

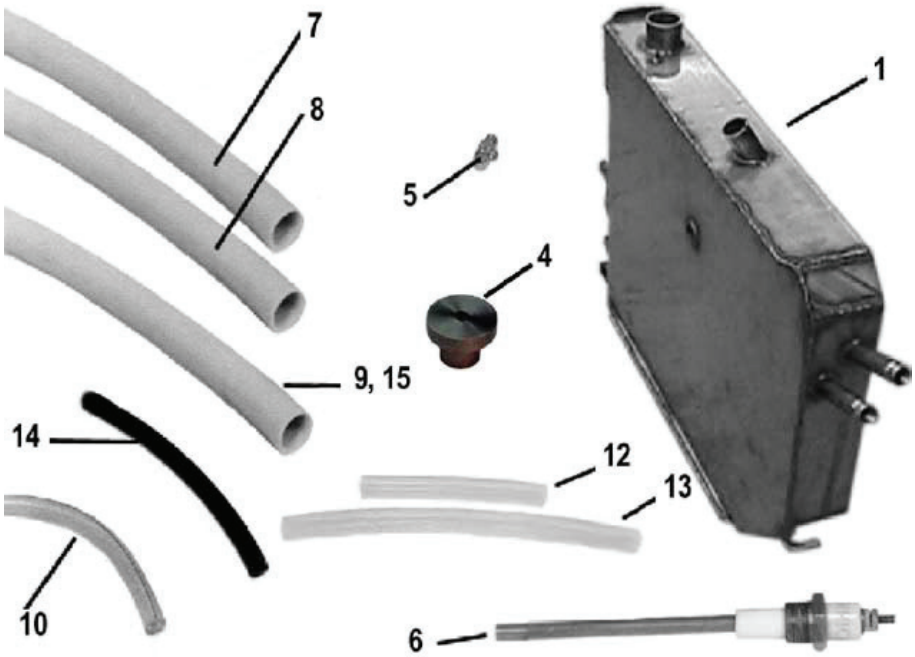

Parts List
Steamer - Individual Parts

Key	Description	Part #
1	Main Gas Valve	122158
2	Regulator - Natural Gas	100513
3	Gas Manifold (Left) Gas Manifold (Right)	123705 123704
4	Igniter Module	154059
5	Solenoid Gas Valve	122120
6	Pilot Gas Switch	087951
7	Water Inlet Valve - 3 outlet (prior to 10/2010)	090827
8	Steam Generator Drain Valve	071234
9	Pilot Burner - Natural Gas	123641
10	Water Inlet Valve - 2 outlet (treated water)	071235
11	Water Inlet Valve - 1 outlet (for untreated condensate cooling)	100934
x	Flame Sensor	003328

x = not shown

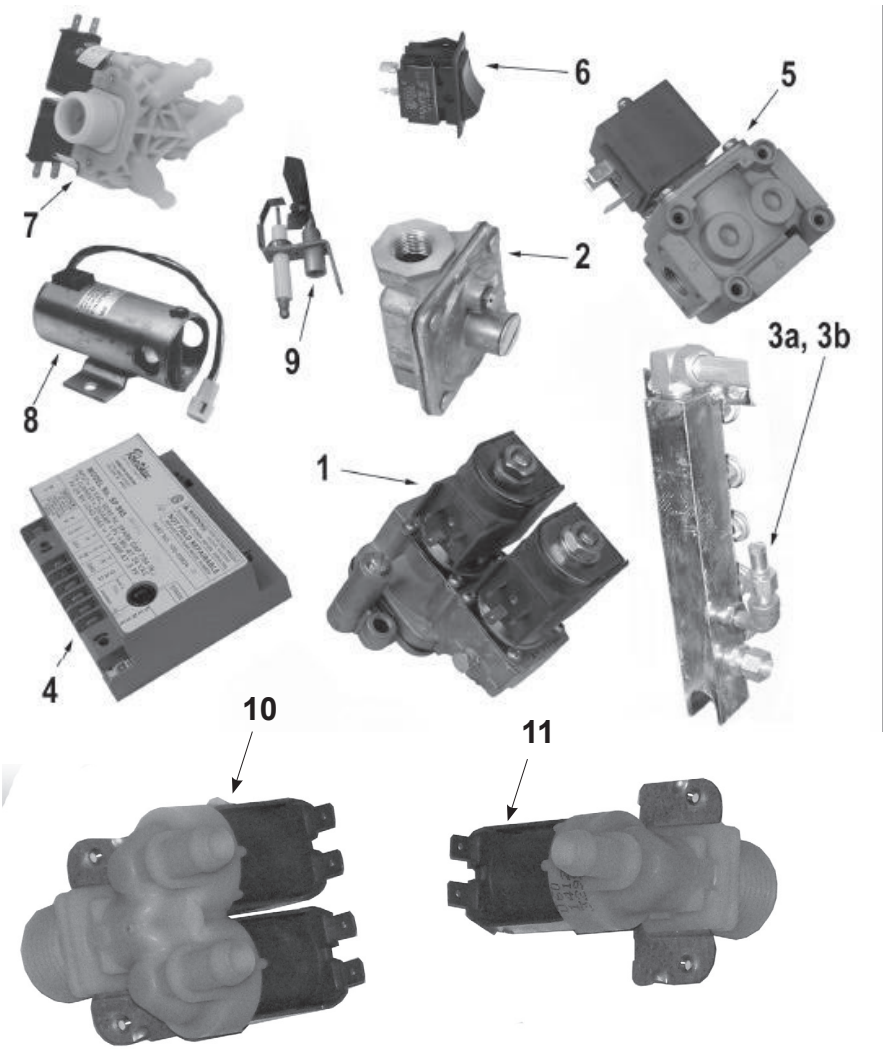

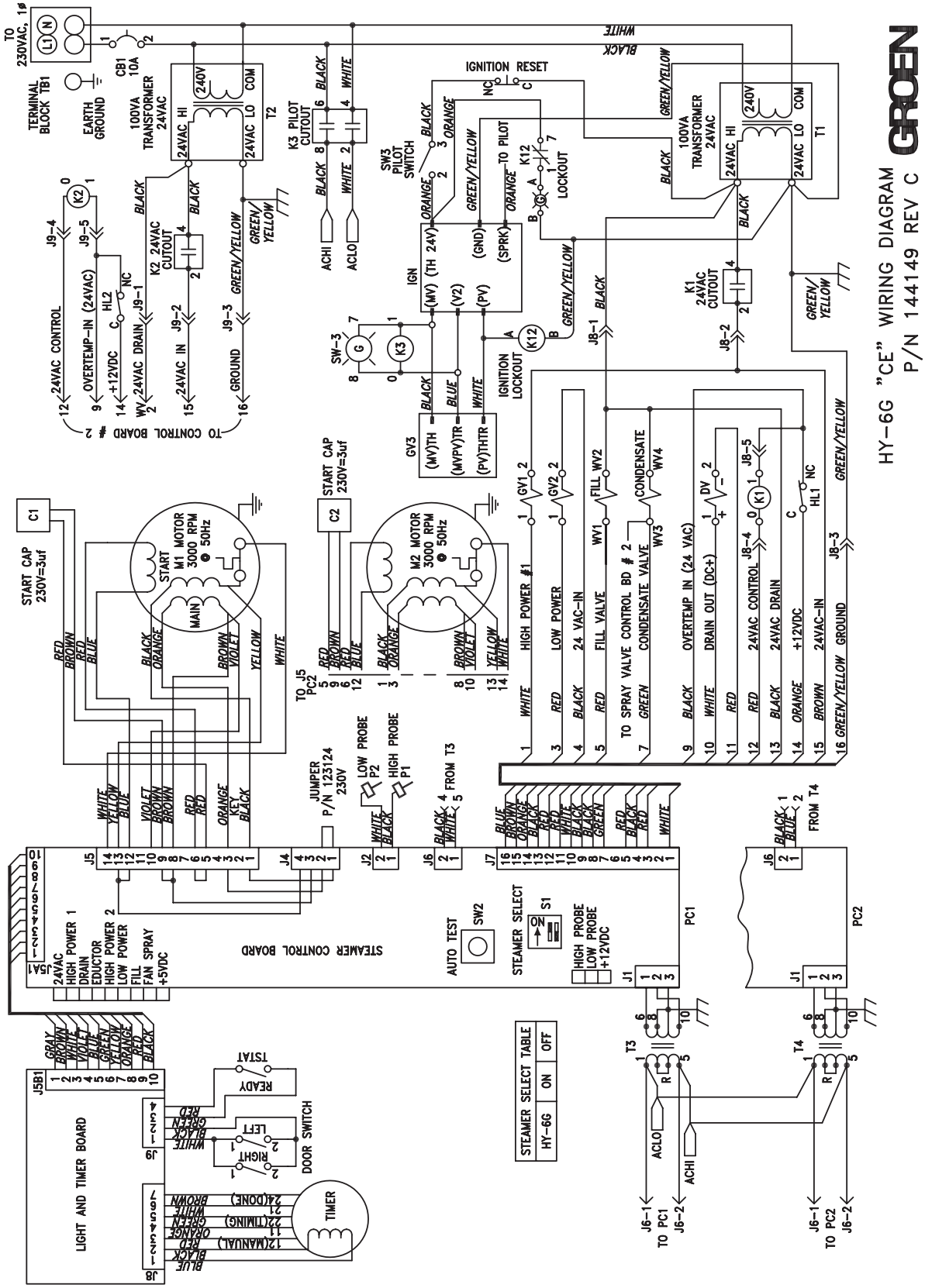
HY-6G "CE" WIRING DIAGRAM
P/N 144149 REV C
GROEN
TO 230VAC, 1Ø
TERMINAL BLOCK TB1
EARTH GROUND
CB1 10A
100VA TRANSFORMER 24VAC
K3 PILOT CUTOUT
IGNITION RESET
SW3 PILOT SWITCH
K12 LOCKOUT
K1 24VAC CUTOUT
K2 24VAC CUTOUT
24VAC CONTROL
OVERTEMP-IN (24VAC)
24VAC DRAIN
24VAC IN
GROUND
TO CONTROL BOARD # 2
START CAP 230V=3uf
M1 MOTOR 3000 RPM 50Hz
M2 MOTOR 3000 RPM 50Hz
START
MAIN
IGNITION LOCKOUT
HIGH POWER #1
LOW POWER
24 VAC-IN
FILL VALVE
CONDENSATE VALVE
TO SPRAY VALVE CONTROL BD # 2
OVERTEMP IN (24 VAC)
DRAIN OUT (DC+)
24VAC CONTROL
24VAC DRAIN
+12VDC
GROUND
JUMPER P/N 123124 230V
LOW PROBE P2
HIGH PROBE P1
FROM T3
FROM T4
STEAMER CONTROL BOARD
AUTO TEST
STEAMER SELECT
HIGH PROBE
LOW PROBE
+12VDC
24VAC
HIGH POWER 1
DRAIN
EDUCTOR
HIGH POWER 2
LOW POWER
FILL
FAN SPRAY
+5VDC
LIGHT AND TIMER BOARD
TSTAT
READY
DOOR SWITCH
TIMER
STEAMER SELECT TABLE
HY-6G ON OFF
ACLO
ACHI
TO PC1
TO PC2

Service Procedures

The following procedures are based upon having access to the steamer on all four sides. If the steamer is installed between other appliances and there is not enough room on the sides for access, the steamer must then be pulled out from its position to gain proper access.

Care should be taken in moving the steamer so as not to stress or pull on the electrical and water connections.

A. Top Right Side Panel (Louvered) - Removal (P/N 123183)

1. With a flat blade screw driver remove the two 10-32 screws on the lower edge and one screw on the top edge of the panel. The panel is held to the steamer by two spring-like clips at the rear and bottom edge.

2. Once the screws are removed SLIDE the panel towards the front with a lifting motion. Do not attempt to PRY the panel. Once the panel is free of the rear and lower clips, it may be lifted off.

ASSEMBLY TIP: When replacing the panel, press the rear edge inward so that both clips will be retained by the back flange. Make sure that the holes in the panel are in alignment with the tapped holes in the steamer so that the replacement of the two 10-32 screws will be easy and not damage the screws.

B. Steamer Table Panels (Front P/N 096720, Rear P/N 096785, Left/Right Side P/N 096848)

1. To remove the steamer table lower panel, simply raise the panel and swing out. There are no fasteners on this panels and it is retained only by upper and lower tracks.

2. To remove the front and side panels remove the screw(s) holding the panel, then remove the panels.

3. The front and rear panels are unique and the two side panels are identical and interchangeable.

C. Left Side - Removal (P/N 123184)

Under normal conditions, the left side cover should never have to be removed as there are no operational and/or replacement parts to be accessed. The single exception is if the door has been reversed so that the handle is on the LEFT and the Door Interlock Switch is found to be defective and must be replaced. The door switches for BOTH door positions are installed at the time of manufacture, so there is no need to access the switch if the door is to be reversed.

1. If the top/left side cover must be removed due to a faulty door switch, remove the right side panel (as above) first. Then remove the top left panel in the same manner.

D. Adjustable Legs (P/N 042505)

1. Each leg is provided with a screw type support post. These may be extended or retracted by turning them with a wrench or ChannelLock. Make sure that all four legs are in tight contact with the floor for proper steamer support.

2. If damaged, these posts may be replaced by tapping out (on opposite sides of the leg) the threaded fitting which is friction held in each stainless steel leg. The stainless leg and the threaded fitting are one assembly.

NOTE: The following components and assemblies are to be found in the lower table portion of the steamer.

E. Steam Generator Drain Valve (P/N 071234)

1. Turn off power and allow steamer to drain completely. Remove back cover panel and loosen hose clamps.

2. Disconnect both ends of the drain hose from the spray box and the steam generator.

3. Unplug and disconnect the valve electrical wires. Remove the nuts holding the valve to the plate. Remove the valve from the threaded studs. Then remove the silicone hose from the valve.

4. Inspect the silicone hose for any damage or lime buildup. Replace hose if required.

5. Attach new drain valve to valve bracket. Pull silicone hose through drain valve and loosely install hose clamps over both ends of the hose. Be sure silicone hose is properly aligned and does not have any kinks, bends and/or twists.

6. Position the valve over the valve mounting threaded studs and connect both ends of the hose to the drain box and steam generator.

7. Position the spring clamps about 3 mm (1/8”) from the end of the hose.

8. Install and tighten valve mounting 10-32 cap nuts.

9. Plug valve electrical leads into the wiring harness.

To Test: Operate steamer and allow steam generator to fill. Check for leaks and observe if drain valve fully closes. Turn off steamer and observe that drain valve opens and the steam generator drains. Install back cover.

F. Water Inlet Valve - Two Way (P/N 071235) and One Way (P/N 100934)

1. Turn off power to the steamer. Turn off the water supply to the steamer. Remove the water supply hose connection on the rear of the steamer.

2. As viewed from the rear, remove the back panel and the right panel.

3. The water inlet to the steam generators (should be supplied with treated water) has a single inlet with two individual solenoid activated valves within a single housing. The water inlet for the drain condensate cooling water (use of regular, untreated water is recommended) has a inlet with one solenoid activated valve. Color of wires are:

Solenoid	**Wires**
Top Steam Generator Fill:	Red and Black
Bottom Steam Generator Fill:	Violet and Black
Condensate Spray:	Black and White

4. Slide the hose clamps down the hose until needed for reassembly. Loosen and remove the hoses using a gentle rocking motion.

5. From the back of the steamer, remove the two screws holding the valve assembly in place. Then lower the valve to be replaced WITH THE WIRES STILL ATTACHED.

6. From the back of the steamer, remove the two 8-32 screws holding the valve assembly in place. Lower the valve.

7. Carefully unplug the connectors, one at a time and attach to the new valve.

8. To install a new valve, reverse the procedures and first install the four or two wires as listed in Item 3 of this Section. Fasten the valve to the steamer with the two screws. Make sure that the valve is NOT installed upside down.

9. Re-attach the hoses to the valve. Slide the hoses all the way so that the end of the hose is flush against the face of the valve.

IMPORTANT. Make sure that the correct steam generator hose is connected to the corresponding valve outlet. Slide the hose clamps back into position around the end of the hose and tighten the clamps.

Slide the hose clamps so that they are within 3 mm (1/8 inch) from the end of the hose.

TOP hose:	to the TOP Steam Generator
MIDDLE hose:	to the BOTTOM Steam Generator
Hose for single valve:	to the DRAIN Box

To Test: With power ON, turn on the power switch to one cavity. The fill solenoid for that steam generator should energize allowing water to enter the steam generator. When READY light is ON, spray valve solenoid should energize and water should enter the drain box.

G. Water Inlet Valve Coil

If a solenoid coil on the water inlet valve is defective, replace the entire valve in accordance with Section F.

H. Drain Box Spray Nozzle (P/N 081670)

1. Raise the stainless steel vent pipe to remove it from the drain box. Do not loosen the hose clamp around the vent pipe. The hose clamp serves to prevent the pipe from going too far into the drain box. Secure the vent pipe in the raised position.

2. Lift the cover of the drain box. There are no fasteners holding the cover on the drain box.

3. Tip the cover and note there is a circular hole in the middle and the spray nozzle (with a hex head) is in the center of the hole.

4. With a socket wrench, turn the spray nozzle in the counter-clockwise direction to remove.

5. To install new nozzle, place pipe compound on the nozzle threads, insert nozzle in socket wrench and start the nozzle in the hole. Tighten nozzle.

6. Replace cover on drain box and lower vent pipe into the drain box.

I. Steam Generator (P/N 094128 & 123655)

1. Shut off power, water and gas supply to the steamer.

2. Turn main gas valve to the OFF position.

3. Disconnect the water inlet hose, steam hose and drain hose by loosening the hose clamps and working the hose off the respective fitting.

4. Disconnect the two boiler manifold gas lines from the gas solenoid valves.

5. Disconnect “spark” lead from igniter module and disconnect the two boiler manifold gas lines from the manifold. Remove the gas lines from the unit.

6. Remove flame holders and/or jets if necessary.

7. Disconnect pilot line from the main gas valve.

8. Disconnect “spark” lead from igniter module and pilot burner.

9. Remove pilot burner.

10. If identification is missing from the water level probe electrical leads, identify and mark them at this time.

11. Disconnect the electrical lead from the water level probe which is being removed, and carefully remove the probe. Be careful not to damage the ceramic material on the probe.

12. Clean the probe and the probe holder.
13. Inspect the probe and its ceramic for damage. If damaged, replace the probe.

14. Disconnect boiler temperature probe leads from harness.

15. Remove temperature probe. If male fitting was removed with the probe and compression nut, remove it from the probe.

16. With a socket wrench, remove the four 1/4-20 bolts holding the steam generator to the steamer table.

17. The entire steam generator (with fittings attached) may now be removed. Remove outer bolt from the side and inner bolt from the rear.

18. Once the steam generator has been removed, the fittings and probes may be transferred to the new steam generator. Make sure that all screw fittings are installed using high temperature pipe compound.

    NOTE: Refer to appropriate sections for detailed instructions on fittings and heater assembly.

19. Install new boiler in the reverse order of removal.

20. Attach the water inlet hose, drain hose and steam hose. Tighten hoses around fittings with hose clamps

J. Steam Generator Probes (High and Low Water) (P/N 141424)

1. Shut off power to the steamer.

2. With a wrench LOOSEN, but do not remove the nuts holding the wire(s) on the probe terminal(s)

3. The wires are connected to wire fork terminals. These will “snap” on and off the terminal post. “Unsnap” them by gently pulling on the terminal.

4. Using an open ended wrench, turn the probe counter-clockwise to remove.

To Install:

5. Apply high temperature pipe compound to the probe and screw it in by hand. Using an open ended wrench, tighten the probe into the fitting.

6. Replace the wire(s) to the probes by snapping the fork terminals around the terminal post. Using a wrench, tighten the terminal nut.

NOTE: If two probes are to be replaced, either replace them one at a time or note the color of the wires attached to the probes. Do not get them mixed up.

K. Main Gas Valve and Gas Pressure Adjustment (P/N 122158)

1. Disconnect power to the steamer.

2. Remove the front and side panels, as described in Section B.

3. Turn the manual gas valve to the closed position. Disconnect the wire to the solenoids.

4. Note the color and position of the two connectors for assembly. Remove the aluminum tubing from the main gas valve assembly using an open-ended wrench. Be careful not to move the aluminum tubing excessively, or to bend it.

5. Using a wrench, remove the two bolts that fasten the main gas valve bracket.

6. With a pipe wrench, open the pipe union on the left side of the main gas valve and remove the gas inlet pipe from the manual gas valve.

7. Remove the main gas valve and manual gas valve assembly.

To Assemble:

8. Clean pipe threads and apply compound to all joints being connected.

9. Install the main gas valve in the reverse order of removal (Steps 8 through 1).

L. Gas Solenoid Valve (P/N 122120)

The gas solenoid valves must be removed as an assembly along with the regulators, using the following procedures:

1. Turn off the gas supply and power to the steamer.

2. Disconnect wires from the main gas (Section K) and from the gas solenoid valves.

3. From the front of the steamer, loosen and disconnect the pipe union which connects the assembly to the main gas valve.

4. From the left side (or back) of the steamer, use a wrench to loosen and disconnect the aluminum tubing to the inner and outer manifolds.

5. The entire assembly of both regulators and the gas solenoid valves for the upper and lower steam generators may be removed as an integrated unit.

6. Remove the gas solenoid valve(s) as required.

To Reinstall:

7. Clean pipe threads and apply compound to all joints being connected.

8. Install the new gas solenoid valve.

9. Slide the assembly into the steamer and reconnect the pipe union. Align the gas valves with their respective aluminum tubing.

10. Using a wrench, connect the aluminum tubing to the burner manifold.

11. Reconnect the wires to the correct valve.

M. Igniter Module (P/N 154059)

1. Shut off power and gas to the steamer.

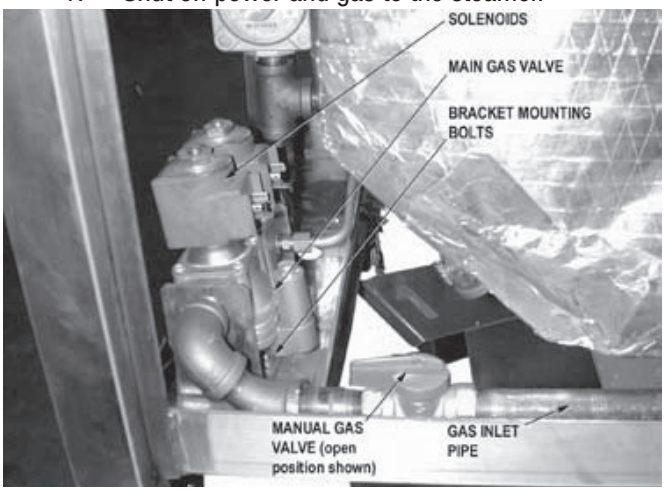

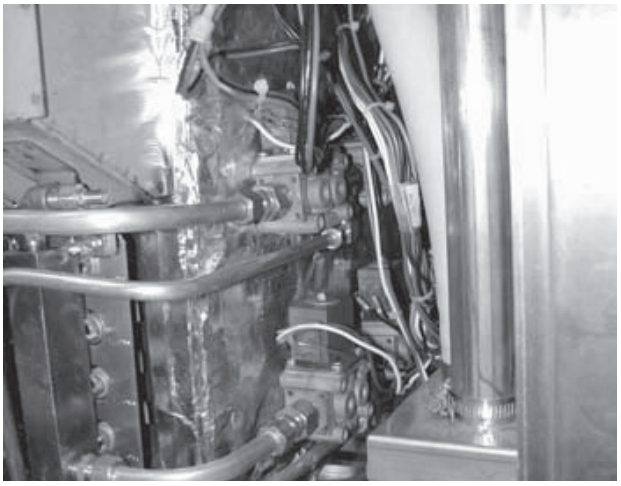

2. Remove the cover to the electrical compartment.

3. The igniter module is located under the relays.

4. Note or tag the wires for reinstallation if necessary, before unplugging. Carefully disconnect the push terminals from the igniter module. Be careful not to pull the terminal by the wire. Use needle nose pliers to grip onto the terminal itself.

5. Remove the screws that secure the igniter manifold.

6. Remove the igniter module.

To Install:

7. Position the new igniter against the back wall of the electrical compartment.

8. When all screws are partially threaded, tighten them one at a time.

9. Plug in each of the terminals. Double check to ensure that they are in the correct location.

N. Pilot Switch (SW3) Removal (P/N 087951)

1. Shut off the power supply. Disconnect the four color coded wires from the switch assembly.

2. The switch snaps into the metal plate where it is retained by plastic tabs on the top and bottom. To remove the switch from the plate, press in on both tabs at the same time and slide the switch out of the bracket hole.

To replace the switch:

3. Insert the new switch into the bracket hole until its tabs clear the hole and snap into position.

4. Reattach the wires to the switch.

O. Pilot Burner Replacement/Current Check/Adjustment - Pilot Flame Sensor Replacement (P/N 123641, P/N 003328 Flame Sensor)

1. Turn off the main gas and power supply.

2. Remove the front cover.

3. Remove the right side panel as described in Paragraph T.

4. Turn the manual gas valve to the OFF position. Turn the pilot switch to the OFF position.

5. Disconnect the pilot line from the pilot burner.

6. Disconnect the “spark” lead from the pilot burner.

7. Remove the flame sensor from the flame sensor bracket.

8. Remove the pilot burner.

Installation:

9. Connect the pilot line to the pilot burner.

10. Connect the “spark” lead to the pilot burner. Be sure to route the lead around the outside of the gas lines.

11. Replace the flame sensor on the flame sensor bracket.

12. Apply anti-seize lubricant to mounting head screw threads. Install the pilot burner and flame sensor assembly, and tighten the screws.

NOTE: Route the “spark” lead and flame sensor wire away from the manifold to prevent improper operation.

13. Turn manual gas valve to the ON position.

14. Connect unit to the branch circuit and turn on the main gas supply.

15. Place pilot switch SW3 in the ON position. Check for gas soundness.

Pilot Flame Current Check:
WARNING: WHEN STEAMER POWER IS TURNED ON, THERE IS HIGH VOLTAGE PRESENT IN THE ELECTRICAL COMPONENTS COMPARTMENT. BE SURE THAT STEAMER IS DISCONNECTED FROM BRANCH CIRCUIT BEFORE PERFORMING ANY REPAIRS.

WARNING: DO NOT ATTEMPT TO LIGHT THE PILOT BURNER WITH A FLAME.

1. Turn off steamer power.

2. Disconnect the ground (green) wire from the igniter module.

3. Connect a DC micrometer between the igniter ground terminal and the disconnected green wire.

4. Ignite the pilot. The micrometer should read 3 microamps minimum.
   - If current reading is correct, replace the igniter module (see 10.13).

   - If current reading is below 3 microamps, continually check the Flame Rectification Circuit (large orange wire, spark electrode, pilot burner hood, and ground connections). If necessary, tighten ground connections and/or replace defective component(s).

5. Check for moisture around the pilot burner, and for corrosion on the electrode and the pilot burner hood. If necessary, remove moisture with a dry, clean cloth. If hood and/or electrode are excessively corroded, replace pilot burner assembly.

P. Steam Generator Gas Jet Manifolds (P/N 123704 & 123705)

1. Shut-off power and gas to the steamer.

2. Remove the right side panel.

3. Turn manual gas valve to the closed position.

4. Remove the four aluminum tubes connected to the manifolds. Disconnect using an open ended wrench.

5. Disconnect all wire connections to the pilot.

6. Remove the two screws from the pilot mounting bracket. Remove pilot from the gas manifold.

7. Using a wrench, remove the two top and one bottom bolts which hold the manifold to the steam generator manifold mounting bracket.

8. Remove the screws in the heat shield.

9. Remove the burner manifold from the appliance.

10. Remove the flame retention springs and injectors as required.

To Reassemble:

11. Replace the injectors and retention springs. Ensure a suitable gas sealant is used on the threads of the injectors to ensure a gas tight seal.

12. Fit the burner manifold to the steam generator manifold mounting bracket.

13. Reinstall and tighten the aluminum tubes to the burner manifold.

NOTE: Ensure all gas connections are sound before continuing.

Q. Timer Assembly (P/N 100983) & Timer Fastener Nut (P/N 101145)

1. Remove the three hex nuts which retain the control panel cover. Remove the cover.

2. Remove the knob from the timer. Under the knob is a hexagonal nut which holds the time mechanism to the steamer. Note that there is a flat on the timer shaft which corresponds to a frictional mounting hole on the knob.

3. From the left side, unplug the five terminals/wires (violet, gray, black, tan and white) from the timer mechanism and unplug the two black timer motor leads.

4. With an open-ended wrench, remove the hex nut holding the timer in place. The timer may then be removed from inside the compartment.

NOTE: Right below the timer shaft, the timer has a small plastic disk molded onto the case. There is a corresponding hole punched into the front panel. This hole may be seen from the inside of the compartment only when the timer is removed.

To Install:

5. Fit the timer in place making sure that it is properly placed so that the disk on the timer fits into the punched hole in the front panel.

6. Once the timer is properly located, tighten the hex nut so that the timer does not slip or rotate. Do not over-tighten the nut.

7. Align the flat of the knob hole with the flat on the timer shaft. Press the knob firmly onto the timer shaft.

8. Plug in the wires identified above and connect the two black wires from the motor leads.

9. Reattach the control panel cover.

R. Fan (P/N 096790)

IMPORTANT: Make sure that the fan has come to a complete stop before attempting any work on the fan.

1. To remove the fan from either the top or bottom cavity, open the door and remove the pan support wire rack in front of the fan.

2. With an allen wrench, loosen the set screw which holds the fan to the motor shaft.

3. Hold onto the fan, and with a slight rocking motion pull the fan off the motor shaft.

To Install:

4. Note that the motor shaft has a flat surface. Position the fan hub on the motor shaft so that the allen set screw is opposite the flat portion of the motor shaft.

5. Slide the fan onto the motor shaft far enough so that the motor shaft is at the end of the fan hub.

6. With an allen wrench, tighten the set screw on the fan.

NOTICE: Advise customer to periodically clean the fan blades of deposited food grade grease coming from the foods being cooked. The deposit of such grease over time could cause the fan to vibrate.

S. Fan Motor Assembly (P/N 096740), Motor Shaft Seal (P/N 096868), Motor Insulation (P/N 094135) & Oil Slinger Washer (P/N 096831)

1. Shut off electrical power to the steamer.

2. From inside the cavity, remove fan using an allen wrench as indicated in Section Q.

3. Using a socket wrench, remove the four 1/4-20 Keps nuts holding the motor. Note that one of the nuts secures the motor ground strap to the steamer.

To Install a New Motor:

4. Make sure the motor insulation board is installed on the four threaded studs to the cavity wall.

5. Apply lubricant on both sides of the steamer motor seal and the inside hole. Refer to the Motor Assembly Chart.

6. Insert the steamer motor seal in the cutout of the insulator board.

7. To prepare motor for mounting, slide the oil slinger washer onto the shaft about ½” (12 mm) down the shaft.

IMPORTANT: This washer has two surfaces: A rubber surface and a phenolic surface. Make sure the phenolic surface is facing the motor.

8. Install the plate seal holder onto the motor shaft. Carefully slide the plate seal holder down the motor shaft until it engages the slinger washer. Continue moving the plate seal holder down the motor shaft until the plate comes to rest on the raised bosses of the motor casting.

9. Using this technique, the rubber side of the oil Slinger washer should be in contact with the plate holder and there should be a space of approximately 5/64” (2 mm) between the phenolic face of the washer and the motor.

10. Using four hex/slotted 6-32 screws, screw the motor mounting plate to the motor with each screw passing through corresponding holes in the plate seal holder.

11. The entire assembly may now be positioned on the four threaded studs protruding from the cavity wall. Fasten the assembly with nuts using a wrench. Make sure that the green/yellow ground strap is secured under one of the nuts securing the motor. The upper motor has a drip shield installed on the lower studs.

T. Motor Starting Capacitor (P/N 096813)

1. Turn off electrical power to the steamer.

2. Loosen and remove the screw holding the capacitor.

3. Unplug the two terminal wires from the capacitor. Remove the capacitor.

To Install New Capacitor:
NOTICE: Make sure that the correct capacitor is used, which is 3 mfd at 330 volt.
4. Make sure the capacitor is seated properly, then tighten the screw securing the capacitor to the mounting plate.

5. Plug terminal wires to the capacitor.

U. Steam Generator Ready Thermostat (P/N 088865)
This thermostat is attached to the cavity steam port.

1. Turn off power to the steamer.

2. Unplug the two wires from the thermostat.

3. Using a wrench, remove the thermostat.

4. To install a new thermostat, use a small amount of heat sink compound (1 drop), applied to bottom of thermostat. Seat the thermostat on the steam port and connect.

5. Plug the thermostat into the wiring harness.

V. Steam Port (P/N 088865) & Gasket (P/N 099250)
1. Shut off power to the steamer.

2. Remove the 1-1/8 inch steam hose by loosening the clamp around the hose and sliding it away from the steam port. Turn and pull to loosen hose and remove from steam port.

3. With a wrench, remove the screws holding the thermostat to the steam port.

4. Cut and fold up aluminum foil insulation blanket to expose the two nuts which hold the steam port to the cavity wall threaded studs.

5. With a wrench, remove the two nuts.

6. Remove the steam port.

To Install:
7. Put a small bead of silicone sealant in and around the groove in the steam port to seal any possible leaks, or use gasket P/N 099250.

8. Install steam port on threaded studs. Secure with two nuts.

9. Fold down aluminum foil insulation blanket to original blanket position and repair cuts with aluminum foil duct tape.

10. Reinstall thermostat as described in T above.

11. Reinstall steam hose to steam port and install the clamp.

W. Cavity Steam Hose Assemblies (P/N 099953 Top & P/N 088880 Bottom)
There are two hoses which connect the steam generators with their respective cavities. One for the top cavity and one for the bottom cavity. If both hoses are to be replaced, replace them one at a time.
1. Shut off power to the steamer.

2. Remove cavity side and lower side panels of table.

3. In the upper portion of the steamer, remove hose. Turn and pull the hose to remove it from the hose nipple.

4. In the lower section of the steamer, remove the hose clamp from where the hose is connected to the steam generator. Turn and pull the hose to remove it from the hose nipple.

5. The hose may be removed. Be careful that the hose clamps do not fall off and get lost.

IMPORTANT: Make sure that the correct part (and part number) are being used. The two hoses in the steamer are of different lengths. (See Page 21 for Part Numbers.)

To Install:

6. Slide the two hose clamps onto the hose and position the hose adjacent to the steam port and steam generator.

7. Slide the hose onto the hose nipple on the steam port and at the other end, onto the steam generator nipple. Make sure the hose is on all the way so that the end of the hose is against the face of the nipples.

8. Install the hose clamps 3 mm (1/8”) from the end of the hose.

X. Door Removal/Installation/Alignment (P/N 094150)

1. To remove the door, turn off the steamer power and allow the steamer to cool. Then, remove door by supporting the weight of the door and remove hinge pin.

2. Place the door on a flat, clean table or similar support, with gasket facing up. Be careful not to scratch door surface.

3. Inspect door gasket for signs of cuts or other defects which may impair its function. Replace if necessary.

To Install:

4. To install the door, apply NEVER-SEEZ lubricant to hinge pin. Align door with hinge and insert hinge pin.

To Align:

5. Place a piece of masking tape over the door pin (bullet) hole in the door.

6. Close the door until the door pin just penetrates the masking tape. Make sure the door pin contacts only the door latch spring.

7. If door pin does not strike the center of the spring hole in the U-channel, loosen the hinge-to-oven bolts and align the door to the door pin. Tighten hinge-to-oven mounting bolts.

8. You should be able to pull a dollar bill or comparable piece of paper smoothly between the gasket and oven cavity with the door closed. To adjust the hinge side, loosen the door-to-hinge bolts and align the door gasket with the oven cavity. Tighten the door-to-hinge mounting bolts. To adjust the bullet side refer to 10.30.

9. Operate the steamer and check for leaks.

Y. Door Switch (P/N 096857)

1. From the right side of the steamer with panel removed, unplug the door switch from the cable harness.

2. The switch (for normal door opening) is held in place with two small screws. With a flat blade screwdriver, remove these screws and the switch may be removed.

3. To install screws for the door switch reverse the above procedure.

4. If the door has been reversed and the switch must be removed and replaced, refer to the top and left side panel removal in Section DD and then remove the switch as above.

Z. Door Reversing Procedures

1. Turn off steamer power and allow steamer to cool.

2. To remove door, support door while removing hinge-to-steamer bolts.

3. Place door with hinge on a flat, clean table (or similar support), with the gasket facing up. Be careful not to scratch door surface.

4. Note and record distance between lock nut and end of door locking pin (bullet). This information will be needed during bullet installation described in Step 6.

5. Loosen lock nut with a wrench. Remove door locking pin and lock nut.

6. Coat bullet threads with NEVER-SEEZ high temperature compound. Install door locking pin and lock nut directly across steamer cavity from old door locking pin location. Install these items so that lock nut-to-end of bullet distance is approximately the same as measured in Step 4.

7. Remove the two truss head screws from above and below the old bullet location and install them above and below the new bullet location.

8. Remove screws and U-channel from the door. Take the magnet and block assembly from present location and place it at the opposite end of the door channel, with the magnet facing outward from the door.

9. Remove screws which secure the handle. Remove door handle from cam.

10. Apply NEVER-SEEZ high temperature (rated for 250ºC) anti-seize and lubricating compound to the cam and Locktite 242 to screw threads.

11. Turn handle and cam 180-degrees from their original positions and install them on the door with screws. Be sure handle and cam move smoothly.

12. Be sure door handle is in the DOWN position. Turn U-channel 180-degrees from its original position, hold door spring in U-channel open with a screwdriver or similar tool, and install U-channel. Do not install the screw at this time.

13. Check operation of the cam. Push up on the door handle and check if the spring opens. If the spring does not open, cam and spring are NOT correctly aligned and problem must be corrected.

14. Apply a light amount of Locktite 242 to screws, then install screws securing U-channel.

15. Apply Locktite 242 to the hinge-to-steamer bolts, then install door and hinge mounting bolts. Do NOT tighten mounting bolts at this time.

16. Align door to steamer. Refer to X, Alignment procedure.

IMPORTANT. When the door is reversed, the alternate door switch (installed at time of manufacture) must be connected to the circuit.

17. From the right side access to the upper portion of the steamer, disconnect the two leads of the door switch.

AA. Door Gasket (P/N 094147)

1. To install, turn off steamer, and allow to cool.

2. Remove the door hinge using one of the following two methods:
   a) Support door weight and remove hinge pin, or
   b) Support weight of the door and remove the two door-to-hinge bolts.

3. Place the door on a flat, clean, smooth table or similar support. Be careful not to scratch the door

4. Position door on workbench so that its front is lying flat, with handle hanging over edge of bench.

5. Remove inner door panel.

6. Remove and discard gasket.

7. Clean back of the inner door panel. Be sure old sealant is completely removed.

8. Install new door gasket around inner door panel. Be sure the inner door panel flange is fully inserted into the door gasket groove.

9. Apply a high temperature silicone sealant, such as GE RTV 180 or equivalent, to the four door spacers.

10. Apply Locktite 242 to the inner door panel mounting screws.

11. Install inner door panel and door gasket on the door spacers, and tighten mounting screws.

12. Align door with hinge and insert hinge pin OR apply Locktite 242 to the door-to-hinge bolts, then install door and mounting bolts. Do NOT tighten mounting bolts at this time.

13. Align door to steamer, per Paragraph X.

BB. Door Handle, Magnet and Block Assembly
Door Handle (P/N 070123), Magnet & Block (P/N 069762), Screws (P/N 005764), Door Cam (P/N 074252), U-Channel Assy (P/N 094144), Outer Door Panel (P/N 094140), Inner Door Panel (P/N 094141) & Door Insulation Bd (P/N 094192)

1. Turn steamer off and allow it to cool.

2. Remove screws and U-channel from the door.

3. Remove screws securing handle, door handle, and cam.

4. Apply a NEVER-SEEZ high temperature compound to the door cam and Locktite 242 to screw threads.

5. Assemble door cam to handle with screws.

6. Be sure door handle is in the DOWN position. Hold U-channel door spring open with a screwdriver or similar tool, then install the U-channel. Do NOT install screws at this time

7. Check operation of the cam and door spring. Push up on the door handle and check if spring opens. If the spring does not open, the cam and spring are not correctly aligned and the problem must be corrected.

8. Apply a light amount of Locktite 242 to screws, then install screws, securing U-channel.

CC. Door Spring (P/N 078911)

1. Turn off steamer and allow it to cool.

2. With flat blade screwdriver, remove two screws on U-channel and remove U-channel from door.

3. Carefully remove retaining ring from one end of spring support pin, then remove the pin by moving the pin to the left and to the right.

4. With a wrench, remove the nut. Lift the spring retainer, and then remove the spring.

To Install:

5. Apply a high temperature (rated 250ºC) anti-seize, lubricating compound (NEVER-SEEZ) on the bottom of the U-channel surface that contacts the spring.

6. Install spring onto brass roller, then place square plate over spring.

7. Apply Locktite 242 to Keps nut and install Keps nut.

8. Install spring support pin, then push the retaining ring onto the pin using a screwdriver.

9. Hold door spring open with a screwdriver or similar tool, hold door handle in the down position and install the U-channel, top end first - then lower channel into position. Check that spring opens when door handle is pushed up.

10. Apply Locktite 242 to U-channel mounting screws, then install the screws.

11. Replace the two screws in the U-channel, applying Locktite 242 to secure them in place.

DD. Door Locking Pin (P/N 078914) & Lock Nut (P/N 003823)

1. Turn steamer off and allow it to cool.

2. Note and record the distance between the lock nut and the end of the (bullet shaped) door locking pin. This information is important and will be needed for installation.

3. Loosen lock nut and remove lock nut and door pin (bullet) from front panel.

4. To install new door locking pin, coat locking pin threads with NEVER-SEEZ high temperature compound.

5. Install locking pin and lock nut. The lock nut to end-of-bullet distance should be approximately the same as measured above, in Step 2.

EE. Indicator Neons (Lockout)

1. Turn off main gas supply

2. Turn off oven power and disconnect from branch circuit power.

3. Remove upper right side panel

4. Replace neons as necessary.

Service Log

Model No:	Purchased From:
Serial No:	Location:
Date Purchased:	Date Installed:
Purchase Order No:	For Service Call:

Date	Maintenance Performed	Performed By

Commercial Kitchen Equipment Parts

Find more Groen equipment resources at

parthubz.com/equipment/groen

Need parts or service?

Call 833-700-8006

support@parthubz.com

parthubz.com