Commercial Kitchen Equipment Parts

HENNY PENNY 690

Henny Penny 690 Specification Sheet

Provided by PartHubz

parthubz.com

833-700-8006 | support@parthubz.com

(FASTRON.)® For Henny Penny Pressure Fryers

500, 580, and 600 Series Fryers; 590 and 690 Series Fryers

Upgrade Kit for the 690 Series Shown

The Kitchen Brains™ Upgrade Kits for Henny Penny Pressure Fryers give **higher and more consistent yields** than any electromechanical controls or other electronic controllers already installed in your kitchen.

Easiest To Install & Use

Simply remove the original controls from the fryer manufacturer and slide in the Kitchen Brains™ controller made by the industry's controller specialists.

Ensure Food Safety and Quality

Product that is undercooked or held too long in the Danger Zone (40°-140°F/5°-60°C) can potentially expose your customers and crew to dangerous food-borne illness. Bacteria multiplication can be prevented by controlling the time a product is cooked and/or held. The (FASTRON.)® helps operators avoid food safety dangers by automatically monitoring these cook and hold times. Precisely timed products deliver consistently good-tasting food to your customers. Hold timers also ensure that expired product is never served.

Increase Yields

Independent tests show the (FAST.Flex)™ cooking curve provides the best and most consistent yields across load sizes and cooking temperatures, regardless of product temperature and moisture content. A reduction in food waste can also be realized.

Easy to Program

(FAST.Nav)™ mobile phone style and predictive text programming reduces training time and increases productivity.

User-Friendly Messaging

Enhanced graphical display allows a greater range of names and prompts to be used. Create your own product menu and action alarm names, or choose from a pre-programmed library of standard menu items.

Interchangeable with Other Fryers

Easily move your (FASTRON.)® to another fryer eliminating the need to purchase a new control. The controller can be configured to work on fryers from a variety of manufacturers.

Secure Operation

Separate pass codes for store managers and employees prevent unauthorized re-programming.

Energy Savings (optional)

Save energy dollars with the Kitchen Brains™ patented Set Back feature. The controller will automatically lower the appliance's temperature during inactive periods.

Filter Lockout Oil Management (optional).

Reduce costs by extending the usable life of your oil with Kitchen Brains'™ patented SmartStat™ temperature control technology. Filtering your oil at pre-set time(s) of the day will not only give you longer oil life, but will also improve product flavor and reduce the amount of time and labor it takes to change out the oil.

24/7 Technical Support

As with all Kitchen Brains™ products, the (FASTRON.)® comes with 24-hour programming assistance via toll-free phone.

Standard (FASTRON.)® Features

10 or 20 Product Keys to support ever-changing menus. More space for LTOs (limited time offers).

- Fully RoHS compliant
- Easy to read displays.
- Appliance mode front-panel selectable: gas, electric, propane, etc.
- Replaceable menu strip for quick and easy menu changes.
- SCK Xwire™ wireless communications compatible for the networked kitchen
- (FAST.Edit)® and (FAST.Transfer)™ compatible. Reduces time and cost to change recipes. Ensures consistent recipes across all appliances/restaurants.

Optional (FASTRON.)® Features

- Product and Action Alarm name library programming
- Adjustable audio alarm levels
- Diagnostic feature to assist with testing all inputs and outputs
- 3 pre-programmed fryer types (Universal Appliance Control)
- Energy-saving "set back" mode
- 3 action alarms per key
- 10 cooking stages instead of one
- Twice the hold times
- Filter lockout oil management
- SCK Link® software giving you the most advanced communications capability available for HACCP reporting and automated on-line kitchen management.

This document contains confidential information. The dissemination, publication, copying, or duplication of this document or the software described herein without prior written authorization is strictly prohibited.

(FASTRON.)® For Henny Penny Pressure Fryers

500, 580, and 600 Series Fryers

SPECIFICATIONS – 500, 580, 600 SERIES FRYERS; 590 AND 690 SERIES FRYERS

MECHANICAL

- Header: 16 ga. stainless steel
- Front panel: .080 aluminum
- Chassis: .040 aluminum
- Polyester face with back-printed text
- Maximum ambient temperature: 158°F / 70°C

ELECTRICAL

- Power: 120 or 208/230VAC, 50/60 Hz, 40 VA Max.
- Solid-state integrated circuit design
- Switch life rating: >1 million cycles
- Status indicators rated life: 50,000 hours
- Input: 1 temperature sensing thermistor probe
- Output: Pressure solenoid valve and heat control output, contact closure 240VAC @ 10A max. Relay 10A DPDT SLD 24V DC coil
- Noise spike protection: 4,000 volt minimum (on timers and all properly installed controls)

SHIPPING WEIGHT

- Approx. 3 lbs. (1.4 Kg)

SHIPPING DIMENSIONS

- L 22 X W 16 X H 5 inches)

500, 580, AND 600 SERIES

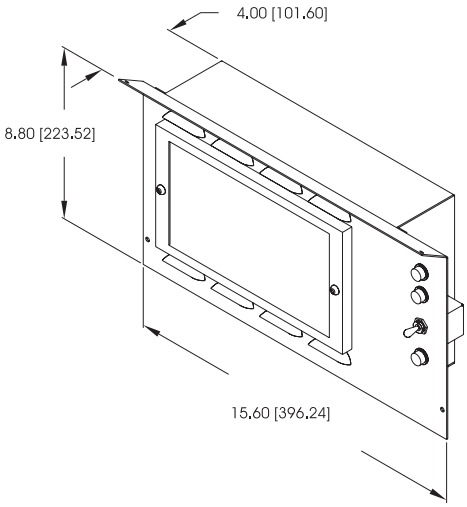

The Kitchen Brains™ Upgrade Kit consists of everything you need to **easily and quickly** replace the existing controller with the Upgrade Kit. Picture depicts (FASTRON.)® VC-210. Also available with Meridian.

ORDERING INFO

4-HEAD ELECTRIC 500 SERIES FRYER	
HP4EI081MA	for a **Complete Upgrade Kit**
Included with the kit are the following:	
231-60210-09	Controller
140-60020-17	Probe Inport, Elec.
213-50405-02	Contactor Assy. Kit
222-50207-02	Adaptor Harness
233-50071-02	Header Assy. 208V
213-50429-02	Installation Kit
233-50071-05	Header 240V
233-50071-10	Header 230V

8-HEAD ELECTRIC 580 SERIES FRYER	
HP8EI081MA	for a **Complete Upgrade Kit**
Included with the kit are the following:	
231-60210-09	Controller
140-60020-17	Probe Inpot, Electric or (for use with the -09 and -11 Hdr. Ass'y.)
140-60020-34	Probe Inpot, Electric (for use with the -07 Hdr. Ass'y.)
222-50207-02	Adaptor Harness
233-50071-07	Hdr. Ass'y. 208V, or
233-50071-09	Hdr. Ass'y. 240V
233-50071-11	Hdr. Ass'y. 230V

4-HEAD GAS 600 SERIES FRYER	
HP4GI081MA	for a **Complete Upgrade Kit**
Included with the kit are the following:	
231-60210-09	Controller
140-60039-01	Probe Inpot, Gas
213-50402	Terminal Kit
222-50125	Harness
222-50207-02	Adaptor Harness
233-50071-01	120V Header (or)
233-50071-03	230V Header CE

*Ordering information contains a Meridian. Consult factory for part numbers of other available models.

This document contains confidential information. The dissemination, publication, copying, or duplication of this document or the software described herein without prior written authorization is strictly prohibited.

(FASTRON.)® For Henny Penny Pressure Fryers

590 and 690 Series Fryers

590 SERIES

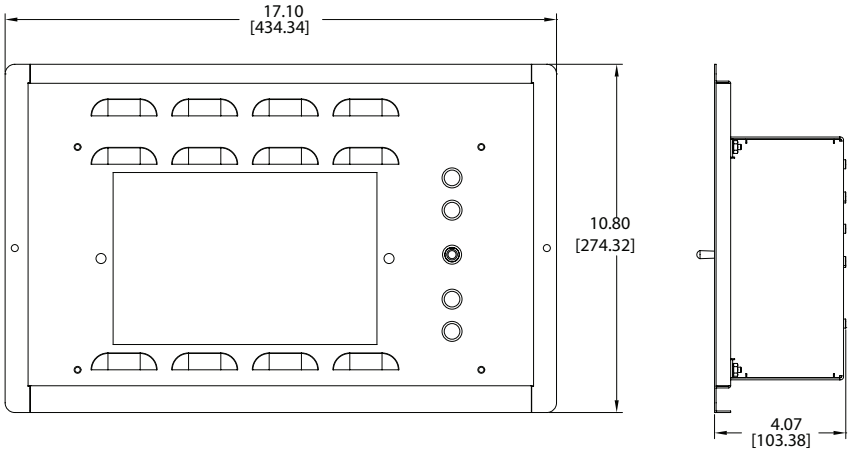

690 SERIES

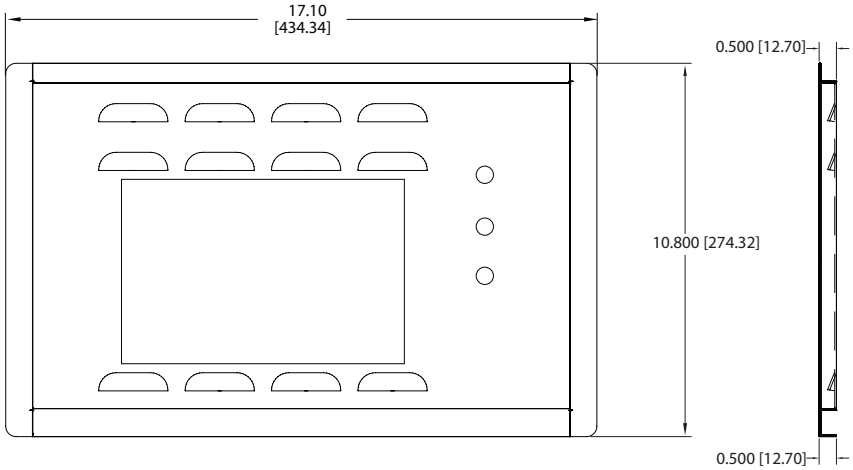

The Kitchen Brains™ Upgrade Kit consists of everything you need to **easily and quickly** replace the existing controller with the Upgrade Kit. Picture depicts (FASTRON.)® VC-210. Also available with Meridian.

ORDERING INFO

8-HEAD 590 SERIES FRYER	
RM1-HP590R	for a **Complete Upgrade Kit**
Included with the kit are the following:	
140-60020-34	Probe (US)
140-60020-17	Probe (UK)
231-60210-05	Controller
222-50207-02	Harness
233-50071-14	Header (US)
233-50071-13	Header (UK)

8-HEAD 690 SERIES FRYER	
HRM1-HP690	for a **Complete Upgrade Kit**
Included with the kit are the following:	
140-60174-01	Probe
231-60210-05	Controller
222-50207-02	Harness
233-58074-01	Header (US)
233-60152-01	Header (UK)

*Ordering information contains a Meridian. Consult factory for part numbers of other available models.

This document contains confidential information. The dissemination, publication, copying, or duplication of this document or the software described herein without prior written authorization is strictly prohibited.

(FASTRON.)® For Henny Penny Pressure Fryers

500, 580, and 600 Series Fryers; 590 and 690 Series Fryers

COMMERCIAL COOKING APPLIANCES ALSO CLASSIFIED BY ETL IN ACCORDANCE WITH NSF STANDARD NO. NSF 169. DESIGN EVALUATED BY ETL IN ACCORDANCE WITH ANSI/AGA Z21.23 AND CAN/CGA 1-6.6-M78.

SCK Link® is a registered trademark of Technology Licensing Corporation and use is subject to the appropriate license agreement.

KITCHEN BRAINS

Driven by (FAST.)® Networked by SCK

Food Automation - Service Techniques, Inc.
905 Honeyspot Road, Stratford, CT 06615-7147 USA

Phone: +1-203-377-4414

Sales: **1-800-FASTRON**
Fax: +1-203-377-8187
International Callers: +1-203-378-6860

www.KitchenBrains.com
Toll-free technical support 24/7 from the U.S., Canada, and Caribbean: **1-800-243-9271**

International offices are located in the United Kingdom, China and Singapore:

Europe, Middle East, Africa, South Asia
31 Saffron Court Southfields Business Park
Basildon, Essex SS15 6SS ENGLAND
Phone: +44 0 1268544000

Asia Pacific
1803, 18F, No 922 Hengshan Rd
Shanghai 200030, CHINA
Phone: +8613916 854 613

15-101, Block 290G, Bukit Batok St. 24
SINGAPORE 65629
Phone: +65 98315927

WARRANTY

Kitchen Brains warrants all new timers, computers, and controllers for 1 year from the date of purchase including computers, controllers, and timers. Kitchen Brains warrants all other items for a period of 90 days unless otherwise stated at the time of purchase.

PATENTS

The products manufactured by Kitchen Brains are protected under one or more of the following U.S. Patents:

5,331,575	5,539,671	5,711,606	5,723,846
5,726,424	5,875,430	6,142,666	6,339,930
6,401,467	6,581,391	7,015,433	7,650,833
7,877,291	8,060,408		

Plus foreign patents and patents pending. Plus licensed patent 5,973,297

This document contains confidential information. The dissemination, publication, copying, or duplication of this document or the software described herein without prior written authorization is strictly prohibited.

Commercial Kitchen Equipment Parts

Find more Henny Penny equipment resources at

parthubz.com/equipment/henny-penny

Need parts or service?

Call 833-700-8006

support@parthubz.com

parthubz.com