Commercial Kitchen Equipment Parts

HOBART 2812PS

Hobart 2812PS User Manual

Provided by PartHubz

parthubz.com

833-700-8006 | support@parthubz.com

INSTRUCTIONS

2812PS SLICER

MODEL 2812PS SLICER
. . . with Portion Scale

MODEL

2812PS ML-104960

Previous models covered by this manual:

2812PS ML-104624
ML-104825

HOBART CORPORATION

701 S. RIDGE AVENUE
TROY, OHIO 45374-0001

937 332-3000

www.hobartcorp.com

FORM 34455 (Feb. 2000)

TABLE OF CONTENTS

GENERAL 3

INSTALLATION 4
- UNPACKING 4
- CARRIAGE TRAY 4
- SHARPENER 4
- TOP KNIFE COVER 4
- DEFLECTOR 4
- FENCE 4
- ELECTRICAL 4
- CLEAN BEFORE USING 4

OPERATION 5
- SAFETY 5
- SLICING — MODEL 2812PS 5
- KEYS 6
- POWER UP 7
- SCALE PLATFORM AND PLATTER ASSEMBLY 7
- CAPACITY 7
- ERROR INDICATOR 7
- IDLE MODE 7
- WEIGHT MODE 8
- TARE 8
- SLICE MODE 8
- SLICING IN MANUAL MODE 9
- SLICE AND WEIGH MORE THAN ONE ITEM 9
- FACTORY SETTINGS 9
- METRIC CONVERSION 9
- USING THE PRESETS: P1, P2, P3, P4 10
- USING THE MEMORY KEY: ◇ 11
- CLEANING 12

MAINTENANCE 14
- KNIFE SHARPENING 14
- LUBRICATION – CARRIAGE SLIDE ROD 14
- SERVICE 14

Installation, Operation, and Care of Model 2812PS Slicer with Portion Scale

SAVE THESE INSTRUCTIONS

GENERAL

The Hobart Model 2812PS Slicer with Portion Scale displays the weight or slice count as the sliced product falls to the platter. Four preset values (P1 thru P4) can be programmed with weight or slice count and are readily accessed for portioning. A memory register (M) allows any current weight or key entered weight or slice count to be used for portioning. The scale display can Tare to indicate Net weight but is *NOT LEGAL FOR TRADE*. The model 2812PS slicer is equipped with a 1/2 HP motor and is available for single-phase electrical service. The slicer features the exclusive Hobart Stay-Sharp contoured cast solid stainless steel knife. The slicer is furnished with a cord and plug as standard equipment. Other features and options include:

The **Power Interrupt** feature, standard, requires the slicer to be manually re-started after a power interruption.

The **Gauge Plate and Carriage Interlock** feature, standard, prevents the Carriage Tray from being removed unless the Carriage is in the HOME position (pulled all the way to the front) and the Gauge Plate is CLOSED. When the Carriage Tray is tilted horizontally, the slicer will turn OFF if it has not previously been turned OFF. Once the Carriage Tray is tilted horizontally or removed, the slicer cannot be started and the Gauge Plate cannot be opened until the Carriage Tray is returned to its normal operating position.

The **HomeStart** feature, standard, requires the carriage to be in the HOME position before the slicer can be started.

If equipped with the **AutoShutoff** option, the slicer will turn off if a full stroke of the carriage has not been made within a 10 second interval. The AutoShutoff option is factory installed only.

A tubular food chute and a 4" leg set are available accessories for 2812PS. The low and high carriage fences are accessories used only with front-mounted meat grips. The standard meat grip is front-mounted. Heavy front-mounted meat grip is an available accessory.

MODEL 2812PS SLICER

© HOBART CORPORATION, 1998

INSTALLATION

UNPACKING

Immediately after unpacking the slicer, check for possible shipping damage. If the slicer is found to be damaged, save the packaging material and contact the carrier within 15 days of delivery.

Prior to installing the slicer, test the electrical service to assure it agrees with the specifications on the machine data plate. The data plate is located on the right side of the slicer base.

CARRIAGE TRAY

The Carriage Tray is secured to the slicer when the knob on the Carriage Tray / Support Arm is turned clockwise until snug (Fig. 1). Refer to page 13 for assembly information.

SHARPENER

The Sharpener should already be mounted on top of the slicer and locked to its bracket (Fig. 1).

TOP KNIFE COVER

The Top Knife Cover should already be in place and secured with its Latch Knob (Fig. 1).

DEFLECTOR

The Deflector should already be mounted below the knife (Fig. 1).

FENCE (Low and High Fences are used with front-mounted meat grip only.)

Either Fence (Fig. 1) can be clamped on the Carriage Tray to limit product movement during slicing.

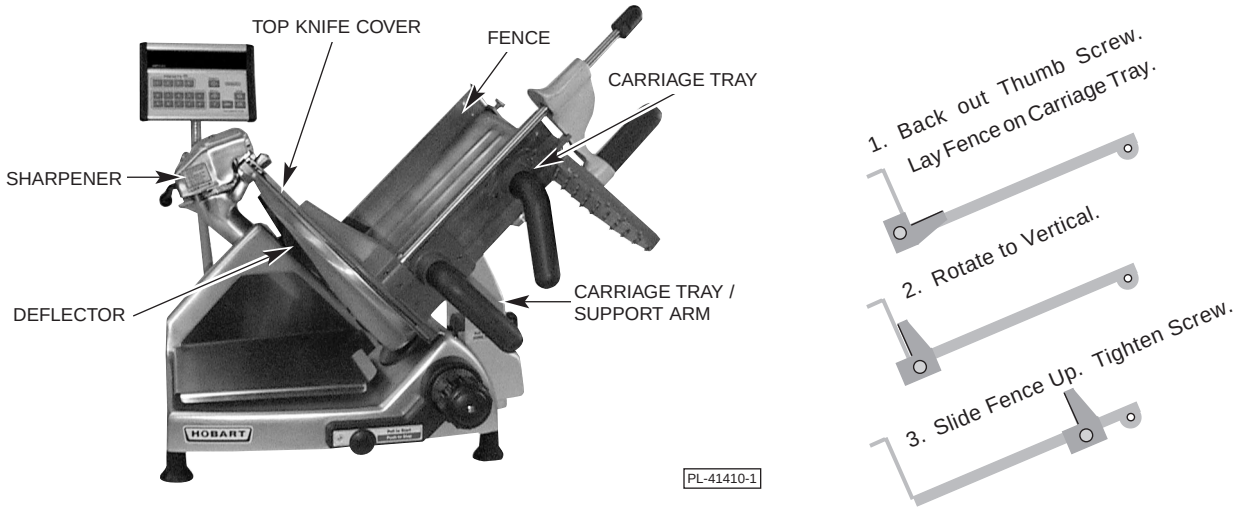

Fig. 1

ELECTRICAL

WARNING: THIS MACHINE IS PROVIDED WITH A THREE-PRONG GROUNDING PLUG. THE OUTLET TO WHICH THIS PLUG IS CONNECTED MUST BE PROPERLY GROUNDED. IF THE RECEPTACLE IS NOT THE PROPER GROUNDING TYPE, CONTACT AN ELECTRICIAN.

CLEAN BEFORE USING

The 2812PS slicer must be thoroughly cleaned and sanitized after installation and before being used. Refer to Cleaning, page 12.

OPERATION

SAFETY

SAFETY DEVICES INCORPORATED IN THIS SLICER MUST BE IN THEIR CORRECT OPERATING POSITIONS ANYTIME THE SLICER IS IN USE.

The Top Knife Cover must be in position and secured with the Latch Knob (Fig. 2). The Ring Guard is not removable. The Deflector, mounted below the slicer knife, can be removed for cleaning.

The Meat Grip (Fig. 2) must be used when slicing short ends to keep your hand(s) away from the knife.

When the slicer is not running, the Index Knob (Fig. 2) must be turned back below zero (fully clockwise). The Gauge Plate will then cover the knife edge.

Always UNPLUG the Power Cord before cleaning or moving the Slicer.

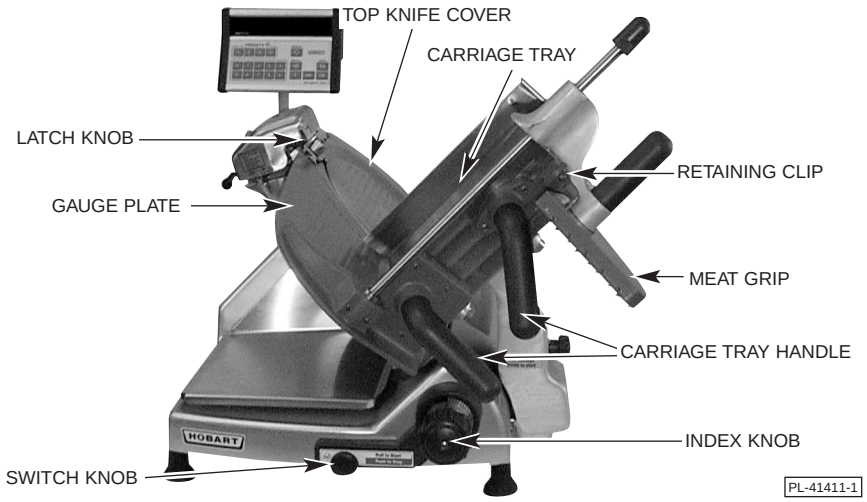

Fig. 2

WARNING: ROTATING KNIFE. USE FEED GRIP. UNPLUG MACHINE POWER CORD BEFORE CLEANING, SERVICING, OR REMOVING PARTS. REPLACE PARTS BEFORE USE.

SLICING — MODEL 2812PS

With the Gauge Plate fully closed, pull the Carriage all the way toward you until it reaches its stop. With the Meat Grip out of the way, place the product to be sliced on the Carriage Tray. Set the Meat Grip against the product.

If the Meat Grip is not needed, it may be stored out of the way by rotating it behind the top of the Carriage Tray where it can rest on the Retaining Clip (Fig. 2).

Adjust the Gauge Plate to obtain the desired slice thickness by turning the Index Knob (Fig. 2). The numbers on the Index Knob do not indicate actual measurements but may be used for reference to duplicate slice thickness. Turn the slicer on by pulling the Switch Knob (Fig. 2) forward until it starts and then releasing it. Slicer will not stay on unless the gauge plate is opened first. Unless the Gauge Plate is opened before pulling the Switch Knob on, the slicer will not continue to run when the Switch Knob is released.

Use either Carriage Tray Handle (Fig. 2) to push the Carriage back and forth to slice.

Turn the slicer off by pushing the Switch Knob or by closing the Gauge Plate.

To use the optional Food Chute, place the Meat Grip on the Retaining Clip, fit the hangers on the Food Chute around the meat grip slide rod (at front), and lower the Food Chute onto the Carriage Tray.

KEYS

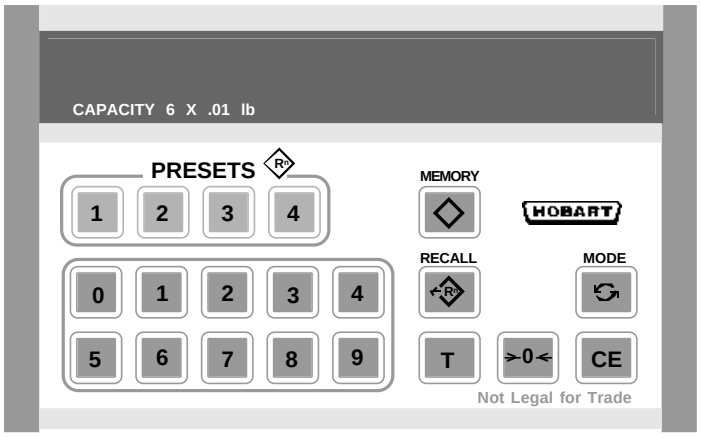

The four Preset keys (1 – 4) recall the last-entered portion mode and value and display the preset indicator (**P1**, **P2**, **P3**, or **P4**). In WEIGHT mode, the slicer beeps when the preset weight is on the platter. In SLICE mode, the slicer beeps when the preset number of slices has counted down to **0**.

The Memory key uses the current entry (platter weight, slice count, or numeric entry) as the portion mode and value and displays the **M** indicator. In WEIGHT mode, the slicer beeps when the preset weight is on the platter. In SLICE mode, the slicer beeps when the preset number of slices has counted down to **0**.

The Recall key momentarily displays the current portion value (P1, P2, P3, P4, or M).

The Tare key (in weight mode) uses the platter weight as the Tare or accepts a numeric entry as the known Tare value. **NET** indicates that Tare is invoked. Repeat Tare, T, to reset the platter to zero weight if slicing more than one item. To toggle Tare off, press the CE key.

The Rezero key resets the scale to zero weight if accumulations occur up to 0.11 lb. The scale will not rezero more than 0.11 lb. While the scale is zeroing, **– 0 –** displays.

The Mode key shifts between WEIGHT mode (either lb or oz) and SLICE mode.

The CE key clears the user entry and restores the previous preset value. It turns Tare off if in **NET** weight mode; or, it resets the counter in SLICE mode.

When the portion weight or slice count is achieved, a beep sounds. A longer beep indicates the key is not valid. A triple beep indicates the entry exceeds acceptable limits. A continuous beep indicates error.

POWER UP

When the slicer is plugged in, the control checks its own circuitry, goes through a series of illuminated displays, and ends with the scale at zero in weight mode.

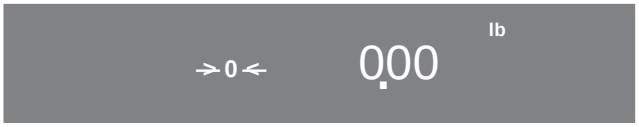

SCALE PLATFORM AND PLATTER ASSEMBLY

Proper assembly of the nylon scale platform and stainless steel scale platter is necessary before weighing. To remove the nylon scale platform, grasp opposite corners and lift straight up. Hold the same way to reinstall. The pedestal of the nylon scale platform fits in the hole in the slicer base. Place the stainless steel platter on the nylon scale platform so the backsplash goes to the rear and the two pins on the bottom fit the holes in the nylon scale platform.

CAPACITY

Scales weighing in U.S. pounds have a total capacity of 6 lb by 0.01 lb increments. When weighing in ounces, the total capacity is 96 oz by 0.1 oz increments. Metric scales have a capacity of 3 kg by .005 kg increments. When weighing in grams, the total capacity is 3000 g by 5 g increments.

ERROR INDICATOR

The platter should be clean and free of debris when the slicer is plugged in — the scale will automatically zero if there is no weight on the platter. The error message, **E 1**, displays only if the scale will not zero when the slicer is plugged in. The error message, E 2, displays only if the slicer must be unplugged and then plugged back in. If either error persists, remove any weight and press →0← to retry before calling Service.

IDLE MODE

After being idle for 5 minutes, the weight digits automatically turn off and leave the decimal point lit. To wake up the display, touch the scale platter, touch any key, or let sliced product fall to the platter. The display returns to normal.

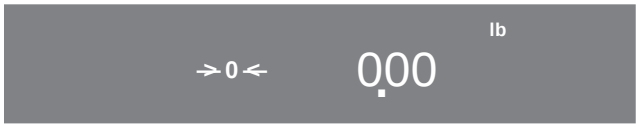

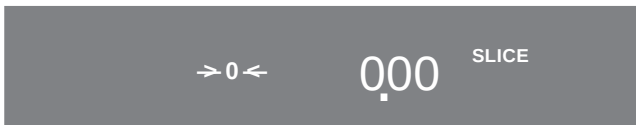

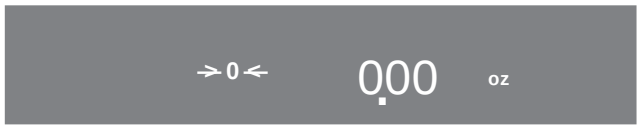

WEIGHT MODE

The scale is ready to weigh if the zero indicator is displayed when the platter is empty. Tare is permitted. Once invoked, the Tare value is set for all WEIGHT mode operations: Manual mode, Presets (P1 – P4), and Memory (M). The Tare value can be changed or turned off at any time. If SLICE is displayed, you can revert back to WEIGHT mode by pressing the MODE key, [↻].

TARE

The scale can tare up to 2 lb (or 1 kg) whenever the scale is in WEIGHT mode.

How to set a platter tare . . .

Place an empty meat tray on the platter and press Tare, [T] .

How to set a known tare value . . .

Enter the known tare value, up to 2 lb (or 1 kg), by using the appropriate numeric keys and pressing Tare, [T].

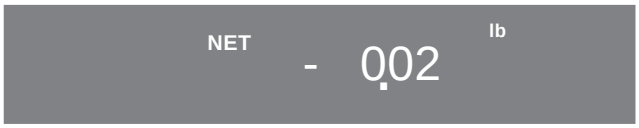

After the tare is set, the **NET** indicator will be lit. With no weight on the platter, the negative (tare) weight will be displayed. With an empty meat tray on the scale; 0.00 lb NET weight displays.

To toggle tare off press the Clear key, [CE] .

lb vs. oz WEIGHING

To shift from **lb** weighing to **oz** weighing, press and hold the MODE key and press the 0 key. To shift from **oz** weighing to **lb** weighing, press and hold the MODE key and press the 1 key.

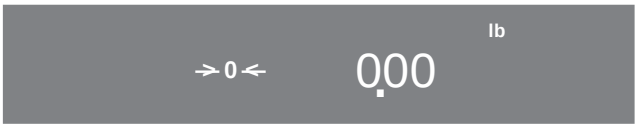

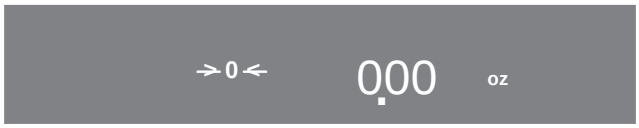

NOTE: When equipped for metric weighing, the Mode key (with 0 or 1) shifts between kg and g similarly; the Mode key (by itself) shifts between WEIGHT mode and SLICE mode.

SLICE MODE

To go to SLICE mode from WEIGHT mode, press the MODE key, [↻]. This allows the slices to be counted. Unless you invoke one of the preset keys or memory, the slicer begins at 0 and counts up. The maximum number of slices that can be counted or programmed is 99.

NOTE: The software version displays for a few seconds if you press the RT area of the HOBART logo.

SLICING IN MANUAL MODE . . . without using the Presets (P1 – P4) or the Memory key

In Weight Mode . . .

Set the Tare, if needed.

Set thickness. Slice product.

The displayed weight will reflect the platter weight (less Tare, if NET was displayed).

When the product is removed from the platter, the display will return to 0.00 lb (or a negative weight will reflect the Tare, if NET was displayed).

In Slice Mode . . .

Press the Mode key, . **Slice** is displayed instead of the WEIGHT mode indicator, **lb** (or **oz**).

Set thickness. Slice product.

The display will count the number of slices. When the product is removed from the platter, press Clear, CE, to reset the slice counter to zero.

The display can shift between WEIGHT and SLICE modes by pressing the Mode key, , at any time.

SLICE AND WEIGH MORE THAN ONE ITEM

After slicing an item in weight mode, press Tare, T, to reset the weight back to zero without removing the sliced product from the platter. Then, with the scale at 0.00 lb NET, slice and weigh the next item. Press Tare again and repeat. Make sure that the maximum Tare, 2 lb (1kg), and the scale's total capacity, 6 lb (3 kg) are not exceeded.

FACTORY SETTINGS

The mode and value settings for P1, P2, P3, and P4 were preset at the factory. Separate memory slots are provided for **lb**, **oz**, **kg**, and **g** settings.

FACTORY SETTINGS

	P1	P2	P3	P4
MODE	WEIGHT	WEIGHT	WEIGHT	WEIGHT
	0.25 lb	0.50 lb	0.75 lb	1.00 lb
	4.0 oz	8.0 oz	12.0 oz	16.0 oz
Metric	0.115 kg	0.230 kg	0.340 kg	0.455 kg
	115 g	230 g	340 g	455 g

METRIC CONVERSION

Portion scales equipped for pound and ounce weighing can be field converted for metric weighing (kilogram and gram), or vice versa — by your service technician. A new bezel needs to be installed in the control's display for this conversion.

USING THE PRESETS: P1, P2, P3, P4

Press any Preset key — the last-saved values will be called up.

For example, let's press the [1] Preset key and assume that the factory settings have not been changed.

In Weight Mode . . .

The preset weight, 0.25 lb, displays for two seconds; then, the actual platter weight (0.00 lb) displays.

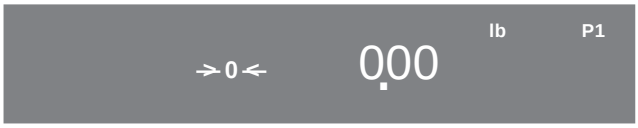

To briefly display the preset weight again, press the Recall key, .

How to change the preset weight . . .

Enter a new preset weight by using the numeric keys. The P1 indicator blinks until you press the same Preset key again, to save the last-entered values. Or, you can press the CE key once to clear and reenter a numeric value; or press the CE key twice to restore the previous values.

Set the Tare, if needed.

Set thickness. Slice product. When the platter weight reaches the preset weight, a beep sounds.

Weighing in ounces (or metric units, kilograms or grams) works similarly.

To change the Preset to SLICE mode for counting slices . . .

Let's assume that **P1** is still displayed on the screen.
Press the Mode key, . **Slice** is displayed instead of the WEIGHT indicator, **lb**. Enter the number of slices by using the numeric keys (up to 99). The **P1** indicator blinks until you press the [**1**] Preset key again to save the last-entered value. Or, you can press the CE key once to clear and reenter a numeric value; or press the CE key twice to restore the previous values.

Set thickness. Slice product. When the number of slices counts down to zero, a beep sounds.

The display can shift between WEIGHT and SLICE modes by pressing the Mode key, , at any time. The displayed weight will reflect the platter weight (less Tare, if NET was displayed).

Repeat or exit. You can exit the Preset by pressing the same Preset key again.

USING THE MEMORY KEY:

In Weight Mode . . .

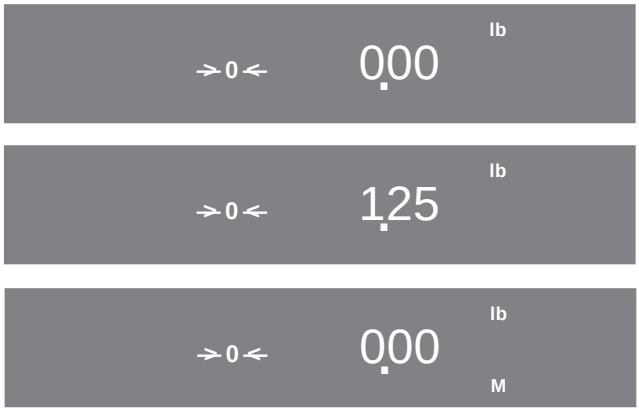

You can enter the preset weight by using the numeric keys (for example, 125). The **lb** indicator will blink and the preset weight, 1.25 lb, displays. [If you make a mistake, press the Clear key, CE, and reenter the numeric value, or press the CE key twice to restore the previous values.]

Press the Memory key, , to store the value in memory and display the actual platter weight (0.00).

If you press the Memory key, , when there is weight on the platter, the platter weight will be saved in memory. The actual platter weight displays until you remove the product from the platter and the display returns to 0.00.

To briefly display the preset weight, press the Recall key, .

Set the Tare, if needed.

Set thickness. Slice product. When the platter weight reaches the preset weight, a beep sounds.

To count slices, change to SLICE mode . . .

Press the Mode key, . **Slice** is displayed instead of the WEIGHT indicator, **lb**. Enter the number of slices by using the numeric keys. **Slice** will blink until you press the Memory key, .

Set thickness. Slice product. When the number of slices counts down to zero, a beep sounds.

The display can shift between WEIGHT and **slice** modes by pressing the Mode key, , at any time. [The displayed weight will reflect the platter weight (less Tare, if NET was displayed).]

Repeat or exit. Exit by pressing the Memory key again.

CLEANING

This machine must be thoroughly cleaned and sanitized after each day's operation or after being idle for an extended period of time.

WARNING: THE SLICER KNIFE IS VERY SHARP. EXERCISE EXTREME CAUTION WHEN WORKING NEAR THE KNIFE.

WARNING: UNPLUG MACHINE POWER CORD AND TURN THE INDEX KNOB FULLY CLOCKWISE BEFORE CLEANING THE SLICER.

Use a clean cloth soaked in mild detergent and warm water to wipe all surfaces of the machine. Rinse using a fresh cloth and clean water. Use only products formulated to be safe on stainless steel or aluminum.

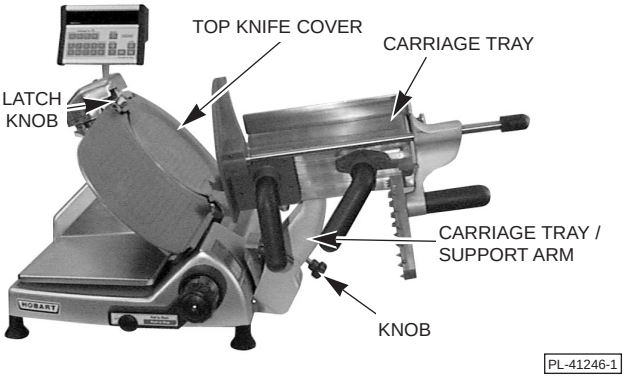

Fig. 3

To clean the Carriage Tray, close the gauge plate and pull the Carriage all the way to the front. Unscrew the Knob on the Carriage Tray / Support Arm (Fig. 3). Tilt the Carriage Tray / Support Arm to the right until almost horizontal (Fig. 3). The Carriage Tray / Support Arm can be cleaned while in this horizontal position, or it can be removed by grasping with both hands and lifting straight up. Once removed, the Carriage Tray / Support Arm can be cleaned in a sink. **NOTE**: The last three digits of the slicer serial number are etched on the Key (Fig. 7) so you can make sure the Carriage Tray stays with its own slicer.

Remove the Top Knife Cover by rotating the Latch Knob (Fig. 3) counterclockwise and lifting it free of the guide pins. Remove the Deflector (Fig. 1) from its mount below the slicer knife by rotating downward. Clean both Top Knife Cover and Deflector with warm soapy water in a sink. Rinse with clean water.

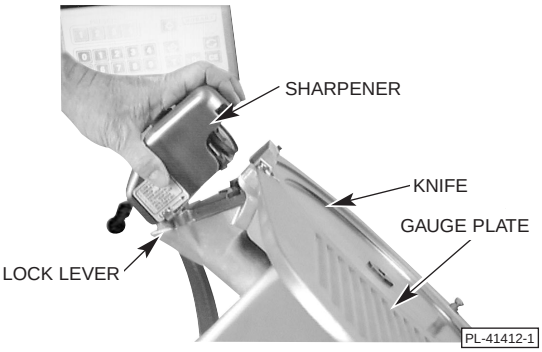

Fig. 4

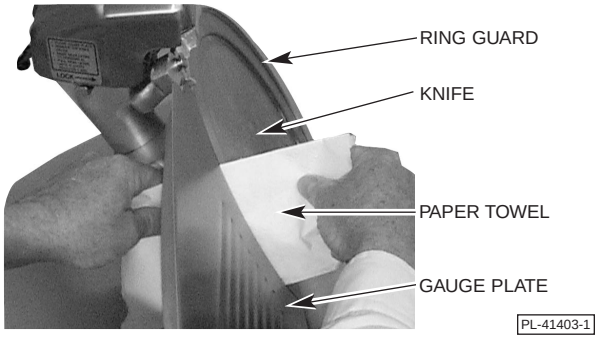

Fig. 5

Remove the sharpener by pushing the Lock Lever to the left (Fig. 4). Tilt the right side up, clearing the right guide pin, then lift the sharpener up, clearing the left guide pin. Wipe out any residue remaining inside the sharpener housing and clean the sharpener in a sink. Rinse with fresh water.

Clean completely around the Ring Guard by working a moistened, folded paper towel between the Ring Guard and Knife. Insert the towel at the base of the Ring Guard. Manually rotate the knife and the towel will wipe the Ring Guard and the edge of the Gauge Plate as it follows the knife (Fig. 5).

Wash and rinse both sides of the knife by wiping outward from the center. Use a mild detergent or sanitizer solution only. Never clean any part of the slicer with steel pads.

The platter and platter support can be removed by lifting straight up. Replace after cleaning.

Do not exceed chemical manufacturer's recommended concentrations for detergent or sanitizer. Do not exceed 200 parts per million concentration of available chlorine. For example, mixing 1 tablespoon of 5.25% sodium hypochlorite bleach with 1 gallon of water yields a solution containing 200 ppm of available chlorine. Solution with concentrations greater than 200 ppm will accelerate corrosion of metals. Maximum exposure to sanitation solution varies with temperature and concentration. Rinse with clean water.

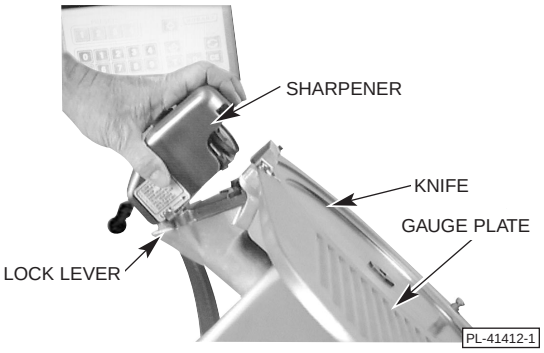

Fig. 6

Reassemble the sharpener to the mounting bracket by sliding the left slot on the sharpener over the left guide pin on the bracket while tilting slightly (Fig. 6). Then, press down on the right side of the sharpener so the locking hole fits over the right guide pin on the bracket. Slide the Lock Lever to the right to lock the sharpener in position. Make sure the sharpener is securely engaged to the pins on the bracket.

Carefully reassemble the Top Knife Cover by putting it in position (three guide pins). Lock by turning the Latch Knob to the left while lowering the Top Knife Cover; then, release the Latch Knob and turn it to the right until snug.

Replace the Deflector below the slicer knife: Guide bottom of socket onto mount and rotate upwards.

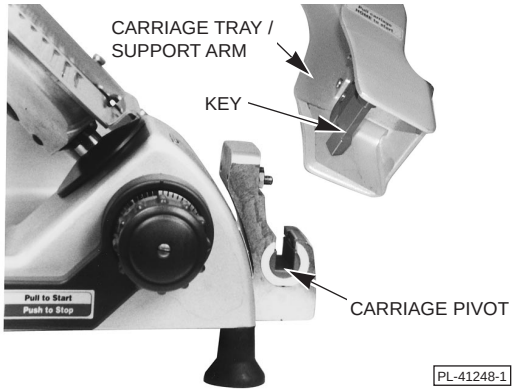

Fig. 7

Make sure the digits etched on the Key (Fig. 7) match the last three digits of the slicer serial number. To reinstall the Carriage Tray / Support Arm: Hold it with both hands and lower it so the Key at the bottom of the Support Arm fits into the slot of the Carriage Pivot (Fig. 7). The Carriage Tray should rest almost horizontal (Fig. 3). Return the Carriage Tray to the Gauge Plate by tilting to the left. Turn the Knob on the Carriage Tray / Support Arm clockwise until snug.

The model 2812PS slicer has a Cleaning Leg underneath the machine. To engage the Cleaning Leg, raise the front of the slicer by lifting the front of the slicer base. The Cleaning Leg will swing straight down. Pull the Cleaning Leg all the way to the front so the slicer is completely supported before cleaning underneath (Fig. 8).

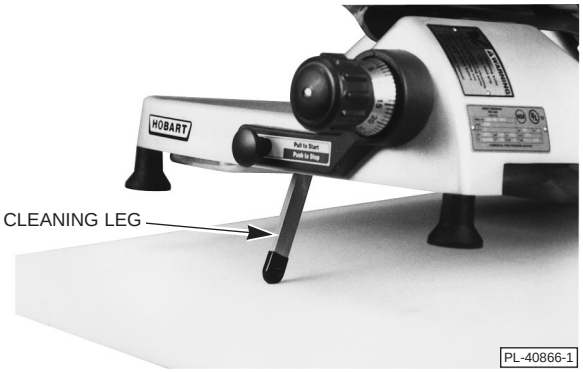

Fig. 8

DO NOT wash any slicer components in a dishwasher.
DO NOT immerse slicer base or motor in water.

If using a chlorinated sanitizing solution, dilute per manufacturer's guidelines. Rinse with fresh water.

NOTE: Failure to follow use, care, and maintenance instructions may void your Hobart warranty.

MAINTENANCE

KNIFE SHARPENING

The Hobart cast stainless steel knife will provide long service in normal food retail or commercial kitchen use. However, in high volume applications where it is a practice to sharpen the knife frequently or even daily, the knife will be expended in a shorter time.

Sharpen only when necessary; prolonged or too frequent sharpening results in unnecessary knife wear.

WARNING: UNPLUG MACHINE POWER CORD.

Turn the index knob fully clockwise to close the gauge plate. Remove the Top Knife Cover by rotating the Latch Knob counterclockwise and lifting it off the slicer. Thoroughly wash the area around the knife, the exposed knife surfaces, and the knife edge. Fat from meat or cheese should not be allowed to transfer from the knife to the sharpener.

Plug in machine power cord. With the carriage tray pulled fully forward, start the slicer with your right hand by pulling the start switch forward and holding it out. If the sharpener handle is the type that does not hang downwards, pull it fully forward for 5 seconds (Fig. 11). If the sharpener handle does hang downwards, lift it with your left hand until horizontal and pull forward for 5 seconds (Fig. 11). Slowly release the sharpener handle. Release the switch knob to turn the slicer off. If necessary, repeat sharpening for another 5 seconds.

Unplug machine power cord. Wipe the slicer with a clean damp cloth to remove any grinding particles. Replace the Top Knife Cover.

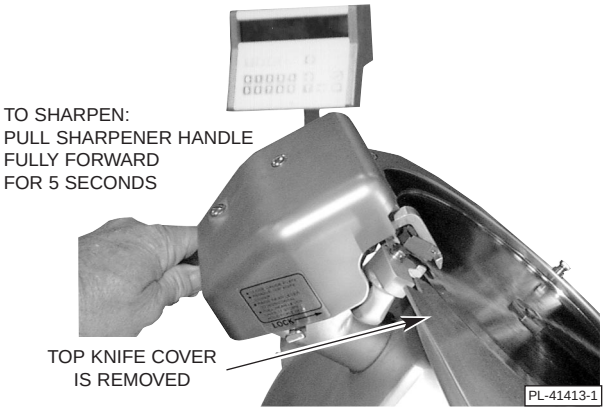

Fig. 9

LUBRICATION — Carriage Slide Rod

Lubricate the Carriage Slide Rod with Lubriplate FMO-200-AW oil (supplied). Either squirt 8 – 10 drops every 2 – 3 months (depending on usage) in the Wick Hole on the Carriage Transport (Fig.10). Or, once monthly, apply 4 – 5 drops directly on the Carriage Slide Rod on each side of the Carriage Transport (Fig.10).

To apply oil, pull out the telescoping tube on the oil bottle, aim the tube, and squeeze gently on the sides of the bottle. After applying oil, move the Carriage Tray back and forth a few times so the oil spreads over the entire length of the slide rod.

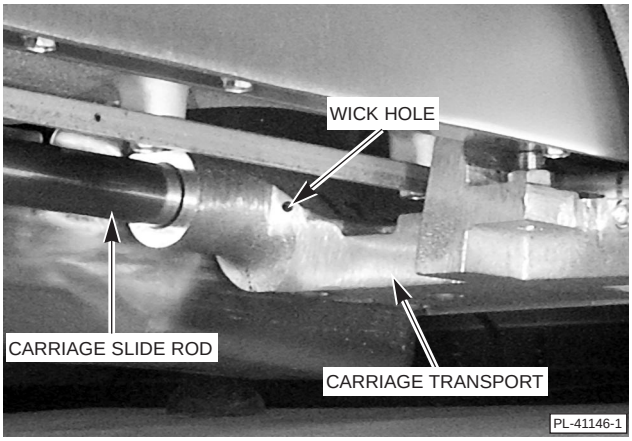

Fig. 10

SERVICE

Contact your local Hobart-authorized service office for any repairs or adjustments needed on this equipment.

NOTES:

NOTES:

Commercial Kitchen Equipment Parts

Find more Hobart equipment resources at

parthubz.com/equipment/hobart

Need parts or service?

Call 833-700-8006

support@parthubz.com

parthubz.com