Commercial Kitchen Equipment Parts

HOBART AM15SVLT

Hobart AM15SVLT document

Provided by PartHubz

parthubz.com

833-700-8006 | support@parthubz.com

Item # _____

Quantity _____

C.S.I. Section 11400

HOBART
701 S Ridge Avenue, Troy, OH 45374
1-888-4HOBART • www.hobartcorp.com

AM15SVLT advansys VENTLESS DOOR-TYPE DISHWASHER

STANDARD FEATURES

- Internal condensing system minimizes water vapor
- Does not require a vent hood when HVAC system is sized for the latent and sensible heat load
- Single point electrical connection (3 phase only)
- Energy recovery
- Sense-A-Temp™ 70°F rise electric booster heater
- .74 gallons per rack final rinse water
- 31 racks per hour – hot water sanitizing
- NSF pot and pan listed for 2-, 4- & 6- minute cycles plus condense time
- Machine lock-out and alerts when detergent is empty
- Machine lock-out and alerts when Final Rinse Temperature is low
- Wash Temperature Assurance prior to cycle start
- Integrated Booster
- Integrated Drain Water Tempering System with Energy Recovery
- Timed wash cycles for 1, 2, 4 or 6 minutes plus condense time
- Solid state, integrated controls with digital status indicators
- Self-draining, high efficiency stainless steel pump and stainless steel impeller
- Stainless steel drawn tank, tank shelf, chamber, trim panels, frame and feet
- Spring counterbalanced chamber with UHMW polyethylene guides
- Revolving, interchangeable upper and lower anti-clogging wash arms
- 27" door opening for 18" x 26" sheet pans or 60 quart mixing bowl
- Revolving, interchangeable upper and lower rinse arms
- Slanted, self-locating, one-piece scrap screen and basket system
- Pumped rinse for constant rinse pressure
- Cycle light and door lock (activated during cycle)
- End of cycle audible alarm (field activated)
- Automatic fill
- Door actuated start
- Automatic pumped drain
- Delime cycle with notification (field activated)
- Service diagnostics
- Straight-through or corner installation
- Hot water sanitation
- Peg & combination rack standard

MODEL

❑ AM15SVLT

VOLTAGE

❑ 208-240/60/1
❑ 208-240/60/3
❑ 480/60/3

ACCESSORIES

❑ Sheet pan rack
❑ Splash shield for corner installations
❑ Drop cord kit

Specifications, Details and Dimensions on Back.

NSF c UL us LISTED ENERGY STAR U.S. GREEN BUILDING COUNCIL MEMBER

HOBART

AM15SVLT advansys VENTLESS DOOR-TYPE DISHWASHER

AM15SVLT advansys VENTLESS DOOR-TYPE DISHWASHER

HOBART
701 S Ridge Avenue, Troy, OH 45374
1-888-4HOBART • www.hobartcorp.com

⚠ WARNING

Electrical and grounding connections must comply with the applicable portions of the National Electrical Code and/or other local electrical codes.

ATTN: Plumbing connections must comply with applicable sanitary, safety and plumbing codes.

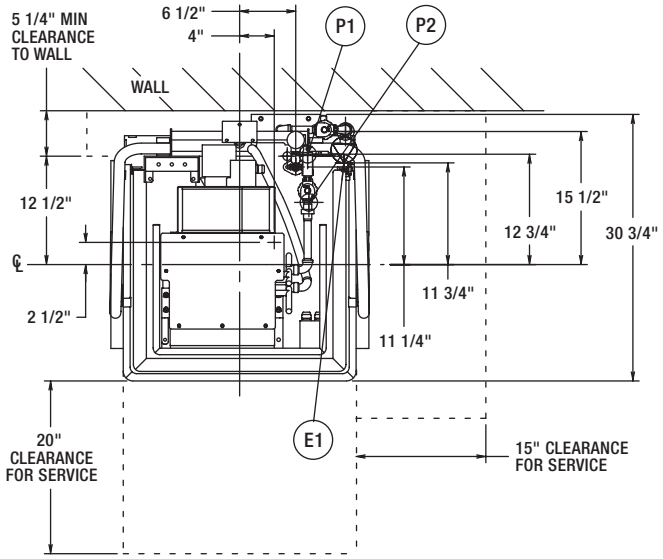

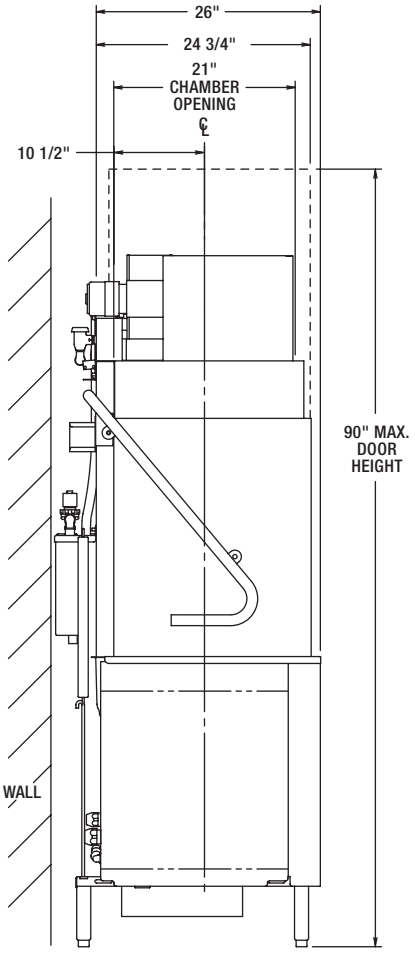

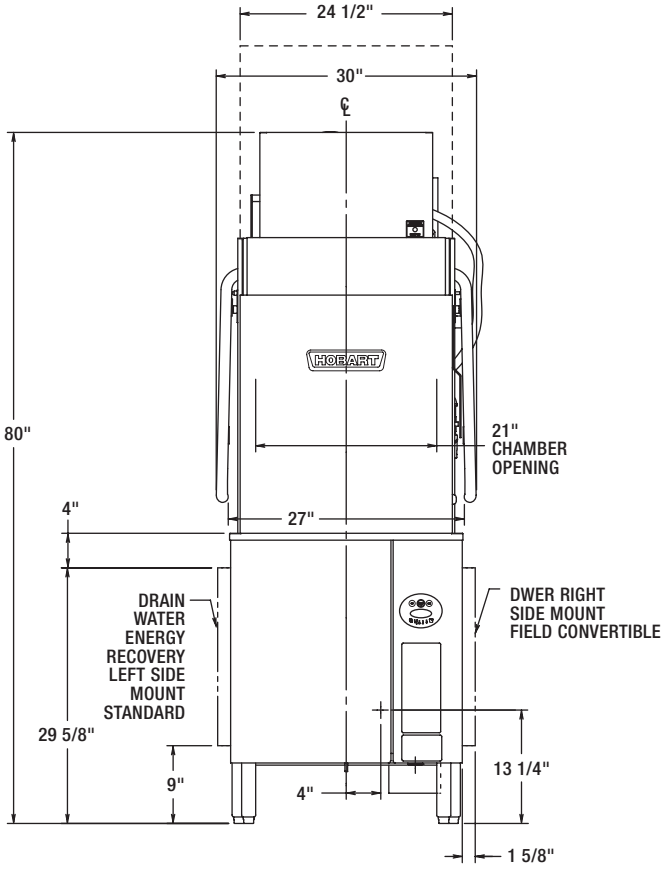

MODEL:
AM15SVLT
00-974591
REV D

PLUMBING NOTES:

WATER HAMMER ARRESTOR (MEETING ASSE-1010 STANDARD OR EQUIVALENT) TO BE SUPPLIED (BY OTHERS) IN COMMON WATER SUPPLY LINE AT SERVICE CONNECTION.

RECOMMENDED WATER HARDNESS TO BE 3 GRAINS OR LESS FOR BEST RESULTS.

FOR CONVENIENCE WHEN CLEANING, WATER TAP SHOULD BE INSTALLED NEAR MACHINE WITH HEAVY DUTY HOSE AND SQUEEZE VALVE.

THIS IS A PUMPED RINSE MACHINE. PRESSURE REGULATING VALVE IS NOT NECESSARY ON HOT OR COLD LINES.

MISCELLANEOUS NOTES:

ALL DIMENSIONS TAKEN FROM FLOOR LINE MAY INCREASE 3/4" OR DECREASE 1/2" DEPENDING ON LEG ADJUSTMENT.

NET WEIGHT OF MACHINE: 450 LBS.
DOMESTIC SHIPPING WEIGHT: 540 LBS.

SIZE OF RACKS - 19-3/4" X 19-3/4"

SINGLE POINT ELECTRICAL CONNECTION STANDARD. MULTIPLE POINT CONNECTION AVAILABLE.

APPROXIMATE HEAT GAIN TO SPACE WITHOUT VENT HOOD	
TYPE	BTU/HR
LATENT	13,000
SENSIBLE	4,800

VENT HOOD IS NOT REQUIRED DUE TO INTERNAL CONDENSING SYSTEM.

CITY OF LA APPROVAL M-660004.

HOBART
701 S Ridge Avenue, Troy, OH 45374
1-888-4HOBART • www.hobartcorp.com

AM15SVLT advansys VENTLESS DOOR-TYPE DISHWASHER

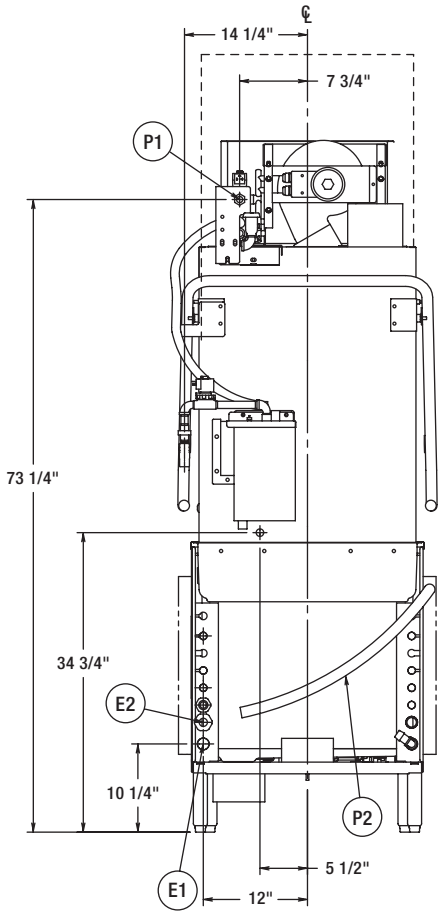

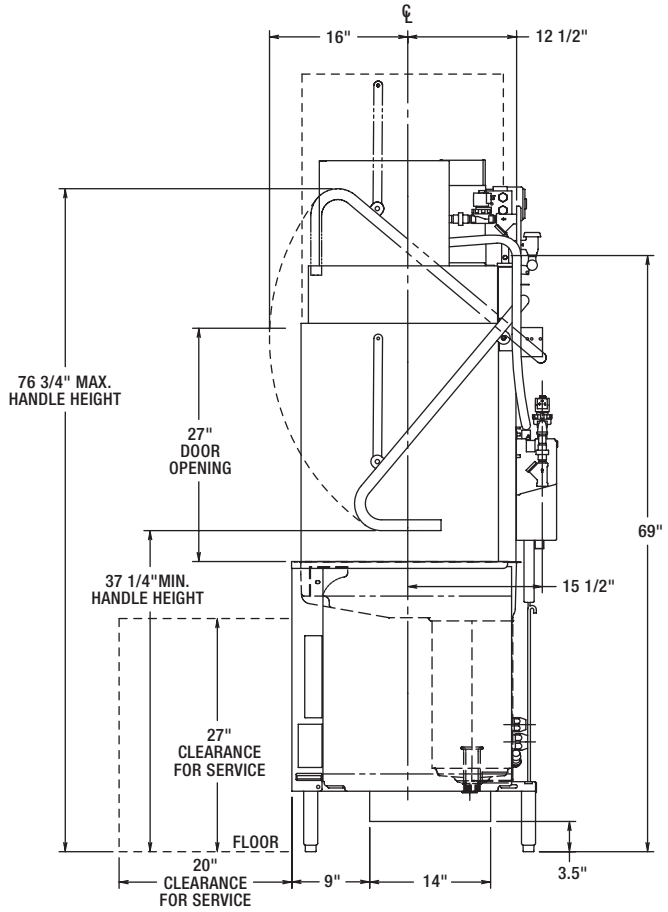

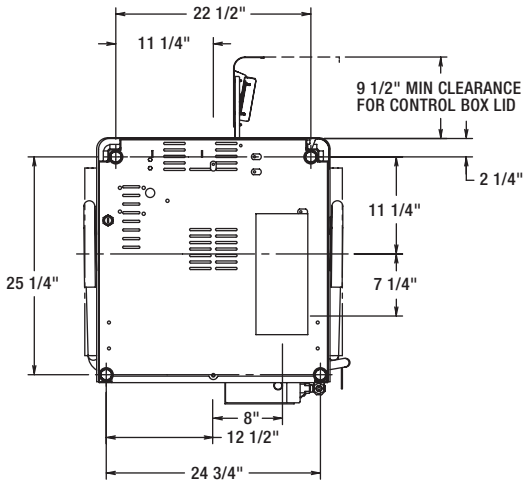

AM15SVLT MACHINE ELECTRICAL AMPACITY RATINGS, ELECTRIC HEAT (INCLUDES BOOSTER)			
ELEC. SPECS	RATED AMPS	MINIMUM SUPPLY CIRCUIT CONDUCTOR AMPACITY	MAXIMUM OVERCURRENT PROTECTIVE DEVICE
208-240/60/3	45.4	60	60
480/60/3	23.7	30	30

AM15SVLT MACHINE 2-ELECTRICAL SERVICE CONNECTIONS ELECTRICAL AMPACITY RATINGS, ELECTRIC HEAT			
ELEC. SPECS	RATED AMPS	MINIMUM SUPPLY CIRCUIT CONDUCTOR AMPACITY	MAXIMUM OVERCURRENT PROTECTIVE DEVICE
MOTOR, CONTROLS & TANK HEAT			
208-240/60/1	43	60	60
ELECTRIC BOOSTER (8.5KW)			
ELEC. SPECS	RATED AMPS	MINIMUM SUPPLY CIRCUIT CONDUCTOR AMPACITY	MAXIMUM OVERCURRENT PROTECTIVE DEVICE
208-240/60/1	35.4	50	50

CONNECTION INFORMATION

(*AFF - ABOVE FINISHED FLOOR)

LEGEND

E1 ELECTRICAL CONNECTION: SINGLE POINT ELECTRICAL CONNECTION 1" CONDUIT HOLE; 10-1/4" AFF.

E2 ELECTRICAL CONNECTION POINT FOR ELECTRICAL BOOSTER 1" CONDUIT HOLE; 10-1/4" AFF.

P1 COLD WATER CONNECTION: 90°F MAX. (65°F OPTIMAL); (WITH 8' BRAIDED HOSE) 3/4" HOSE BIBB; 73-1/4" AFF. 1/2" SUPPLY LINE MINIMUM.

P2 DRAIN CONNECTION: 8' LONG 7/8" HOSE SUPPLIED WITH MACHINE, MAX. HEIGHT 24" AFF.

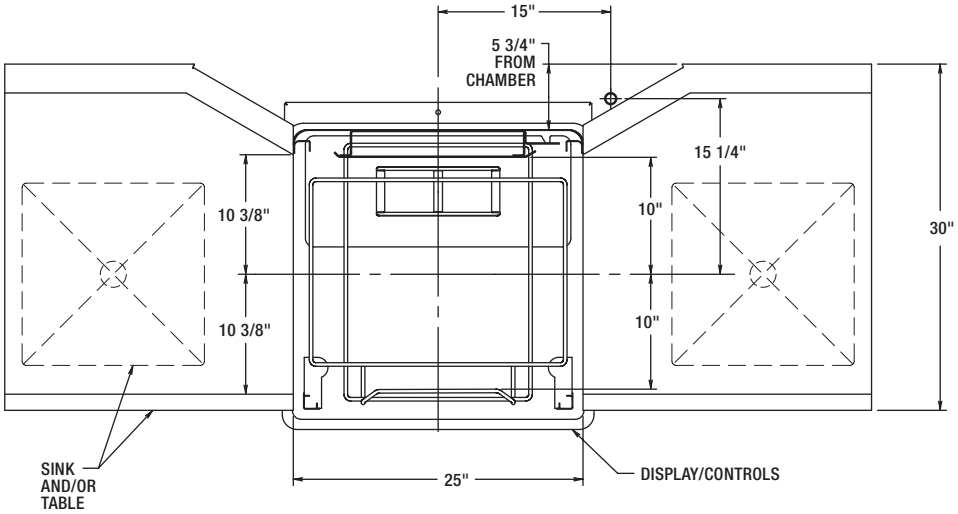

PASS THRU INSTALLATION

TOP INSIDE VIEW OF MACHINE

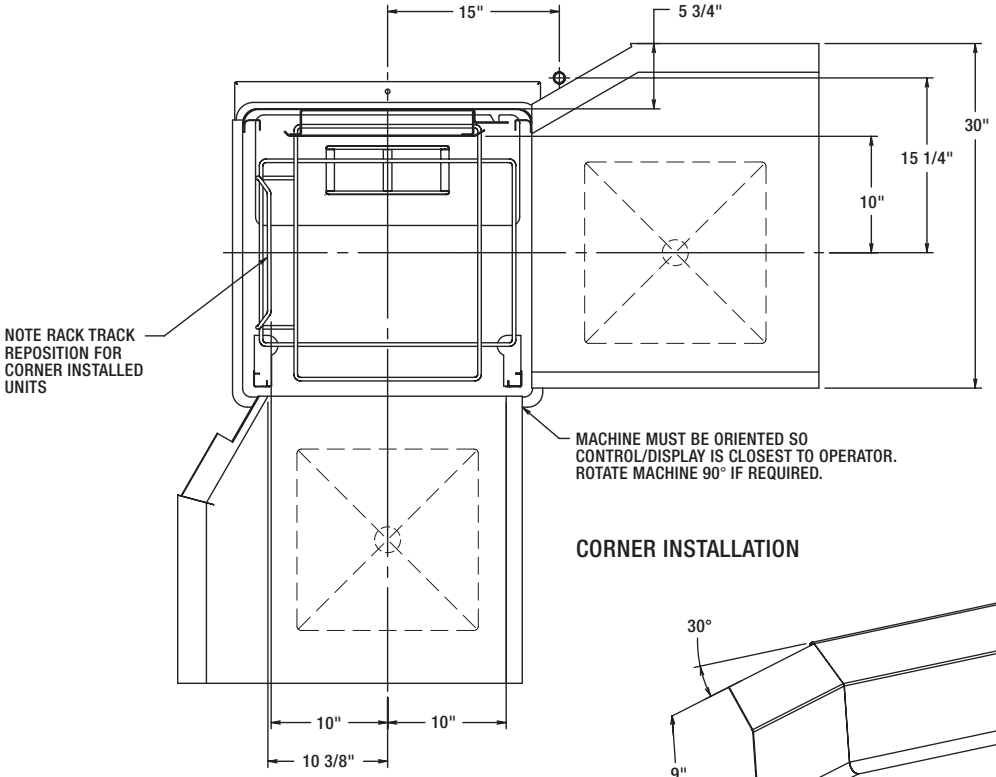

CORNER INSTALLATION

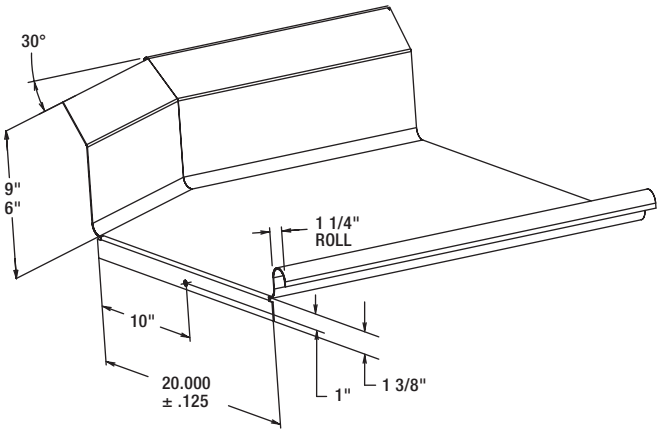

SUGGESTED TABLE DESIGN

HOBART
701 S Ridge Avenue, Troy, OH 45374
1-888-4HOBART • www.hobartcorp.com

AM15SVLT advansys VENTLESS DOOR-TYPE DISHWASHER

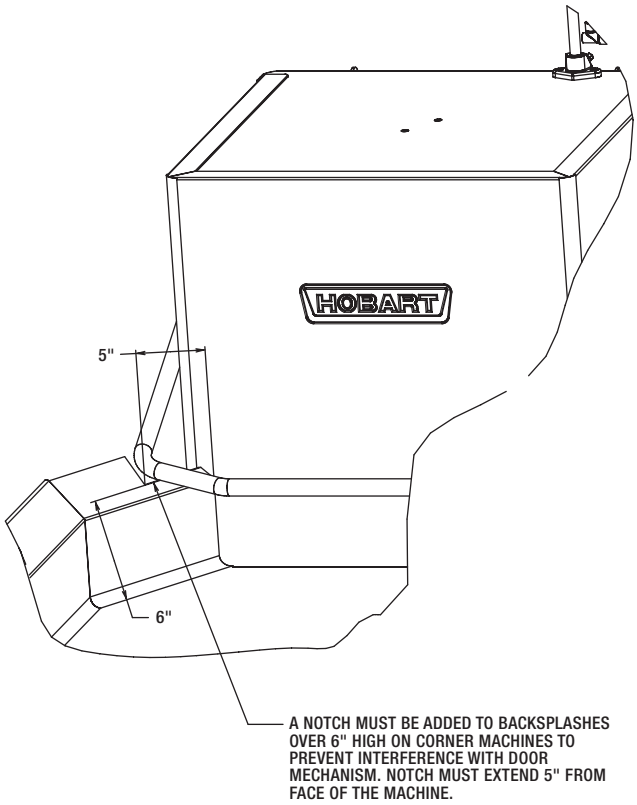

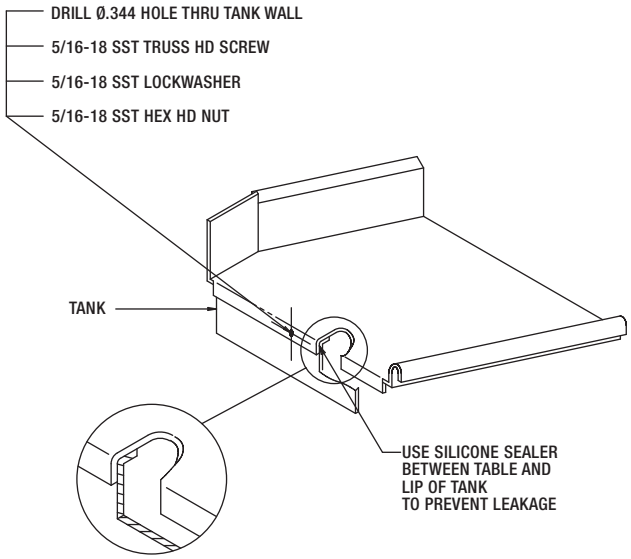

	advansys Ventless Door-Type Dishwasher
Machine Ratings (Mechanical) Racks per Hour (Max.)	31
Table to Table - Inside Tank at Table Connection (Inches	25¼"
Overall Dimensions - (H x W x D) (Inches)	80" x 33" x 30"
Wash Motor H.P.	2
Wash Tank Capacity - Gallons	12
Wash Pump Capacity - Gallons per Minute - Weir Test	160
Electric Booster Heater (Kw)	8.5 Kw
Electric Heating Unit (Regulated)	5 Kw
Blower Motor H.P.	1/20
Rinse Pump Motor H.P.	1/15
Drain Pump Motor H.P.	1/5
Rinse - Minutes operated during hour of capacity operation	6.67
Seconds of rinse per rack	10
Rinse Consumption - Gallons per Hour - Maximum	22.9
Rinse Cycle - Gallons per Rack	.74 - 180°F Min.
Peak Rate of Drain Flow - Gallons per Minute (Initial rate with full tank)	7

The microcomputer-based control system is built into the advansys Ventless Door-Type Dishwasher. It is available in standard electrical specifications of and 208-240/60/3, and is equipped with avreduced voltage pilot circuit transformer.

Water hardness must be controlled to 3 grains of hardness or less for best results.

CONSTRUCTION: Drawn tank, tank shelf and feet constructed of 16 gauge stainless steel. Wash chamber and front trim panel above motor compartment are polished, satin finish. Frame is 12 gauge stainless steel, chamber is 18 gauge, and removable trim panels are 20 gauge.

CHAMBER LIFT: Chamber coupled by stainless steel handle, spring counterbalanced. Chamber guided for ease of operation and long life.

WASH PUMP: With stainless steel pump and impeller, integral with motor assures alignment and quiet operation. Pump shaft seal with stainless steel parts and a carbon ceramic sealing interface. Easily removable impeller housing permits ease of inspection. Capacity 160 GPM. Pump is completely self-draining.

WASH PUMP MOTOR: Built for Hobart, 2 H.P., with inherent thermal protection, grease-packed ball bearings, splash-proof design, ventilated. Three-phase is squirrel-cage, induction type.

RINSE PUMP: Powered by a 1/15 H.P. single phase motor, the rinse pump is made of high strength engineered composite material.

BLOWER: The condenser blower is an all stainless steel forward curved centrifugal wheel powered by a 1/20 H.P. TEFC single phase motor for nearly silent operation.

CONDENSER COIL: The condensing system uses a tube and fin coil constructed of copper and corrosion resistant aluminum.

MICROCOMPUTER CONTROL SYSTEM: Hobart microcomputer controls, assembled within water- resistant enclosure, provide built-in performance and reliability.

The microcomputer control, relays and contactors are housed behind a stainless steel enclosure, hinged to provide easy access for servicing. The line voltage electrical components are completely wired with 105°C, 600V thermoplastic insulated wire with stranded conductors. Electrical components are wired with type ST cord. Line disconnect switch NOT furnished.

CYCLE OPERATION: The microcomputer-timing program is started by closing the doors, which actuates the door cycle switch. The cycle light turns ON and door lock engages. The microcomputer energizes the wash pump motor contactor during the wash portion of the program. After the wash, a dwell permits the upper wash manifold to drain. At the end of the dwell, the final rinse pump is energized. After the final rinse pump turns off, Sani-Dwell permits sanitization to continue. The Rinse display remains on during this period. The Blower and Cold Water Valve turn on for 30 seconds to condense the vapor laden air inside of the chamber and the machine automatically drains excess water. The display shows a count down time (in seconds) during this operation if proper final rinse temperature of 180°F was achieved. After the 30 seconds is complete the Cycle Light turns OFF and the door unlocks, completing the program. If proper final rinse temperature of 180°F was not achieved, the cycle will repeat (3 times maximum) and, if not successful, an EA error will be indicated. Lockout can be cleared by turning machine Off and back On. 31 racks per hour – 111 seconds: 58 Second Wash, 2 Second Dwell, 10 Second Rinse, 7 Second Sani-Dwell. 34 Second Condensing. Other programs can be pre-selected by your Hobart service technician.

Manual wash cycle selector also provides selection of 2-, 4- or 6-minute wash cycles plus condense time for heavier washing applications.

WASH: Hobart revolving stainless steel wash arms with unrestricted openings above and below provide thorough distribution of water jets to all dishware surfaces. Arms are easily removable for cleaning and are interchangeable. Stainless steel tubing manifold connects upper and lower spray system.

RINSE: Rotating rinse arms, both upper and lower, feature 14 rinse nozzles. The stainless steel upper and lower rinse arms are easily removable without tools for inspection and are interchangeable. The motor driven rinse pump gives constant rinse pressure regardless of water service supply pressure. Easy open brass line strainer furnished.

COLD WATER FILL: Microcomputer controlled fill is supplied from the cold water service connection. It enters the machine through an air gap system which protects the potable water supply from contamination. Ratio fill method is used giving the correct fill at any flowing water pressure.

COLD WATER: Cold water supplied to condenser coil is heated during the condensing period at the end of each cycle. This preheated water is supplied to the booster for subsequent heating.

PUMPED DRAIN: Automatically drains water through a built-in pump. Maximum 24" drain height permitted.

STRAINER SYSTEM: Equipped with large, exclusive self-flushing, easily removable perforated stainless steel, one-piece strainer and large capacity scrap basket. Submerged scrap basket minimizes frequent removal and cleaning.

HEATING EQUIPMENT: Standard tank heat is 5 KW electric immersion heating element. Water temperature regulation is controlled by thermistor sensor in combination with microcomputer controls. The tank heat and positive low water protection microcomputer circuits are automatically activated when the main power switch is turned “on”. If tank is drained, low water protection device automatically turns heat off. These features are standard with the Hobart Microcomputer Control System.

ENERGY RECOVERY: Heat energy is recovered from the condensation of vapors in the chamber at the end of each cycle. This pre-heats the water for the next rinse cycle from 55°F up to 140°F.

DRAIN WATER ENERGY RECOVERY (DWeR): Uses the heat from the exiting drain water to warm up the incoming cold water. This heats the cold water prior to filling the booster heater, thus requiring less energy from the booster to reach final rinse temp of 180° for that water. Additionally, by removing this heat from the exiting drain water, and by tempering (cooling) that water, the machine complies with national plumbing codes which require that water be less than 140° as it is passes into external drain piping.

ELECTRIC BOOSTER HEATER: 8.5 KW electric booster with Sense-A-Temp™ technology adequately sized to raise 110°F inlet water to 180°F.

As continued product improvement is a policy of Hobart, specifications are subject to change without notice.

Commercial Kitchen Equipment Parts

Find more Hobart equipment resources at

parthubz.com/equipment/hobart

Need parts or service?

Call 833-700-8006

support@parthubz.com

parthubz.com