Commercial Kitchen Equipment Parts

HOBART AM15VL

Hobart AM15VL document

Provided by PartHubz

parthubz.com

833-700-8006 | support@parthubz.com

Item # _____

Quantity _____

C.S.I. Section 11400

HOBART
701 S Ridge Avenue, Troy, OH 45374
1-888-4HOBART • www.hobartcorp.com

AM SELECT VENTLESS DISHWASHER

STANDARD FEATURES

- Internal condensing system minimizes water vapor
- Does not require a vent hood
- Energy recovery
- Sense-A-Temp™ 70°F rise electric booster heater
- .74 gallons per rack final rinse water
- 40 racks per hour – hot water sanitizing
- NSF pot and pan listed for 2-, 4- & 6- minute cycles plus condense time
- Timed wash cycles for 1, 2, 4 or 6 minutes plus condense time
- Solid state, integrated controls with digital status indicators
- Self-draining, high efficiency stainless steel pump and stainless steel impeller
- Stainless steel drawn tank, tank shelf, chamber, trim panels, frame and feet
- Spring counterbalanced chamber with UHMW polyethylene guides
- Revolving, interchangeable upper and lower anti-clogging wash arms
- Revolving, interchangeable upper and lower rinse arms
- Slanted, self-locating, one-piece scrap screen and basket system
- Pumped rinse for constant rinse pressure
- Cycle light
- End of cycle audible alarm (field activated)
- Automatic fill
- Door actuated start
- Automatic drain closure
- Delime cycle with notification (field activated)
- Service diagnostics
- NAFEM Data Protocol capable
- Straight-through or corner installation
- Hot water sanitation

VOLTAGE

- ❑ 208-240/60/1
- ❑ 208-240/60/3
- ❑ 480/60/3

MODEL

- ❑ AM15VL

OPTIONS AT EXTRA COST

- ❑ Single point electrical connection (3 phase only)

ACCESSORIES

- ❑ Peg rack
- ❑ Combination rack
- ❑ Splash shield for corner installations
- ❑ Flanged and seismic feet
- ❑ Drain water tempering kit

Specifications, Details and Dimensions on Inside and Back.

HOBART

AM SELECT VENTLESS DISHWASHER

The Boelter Companies, Inc.

AM SELECT
VENTLESS DISHWASHER

HOBART
701 S Ridge Avenue, Troy, OH 45374
1-888-4HOBART • www.hobartcorp.com

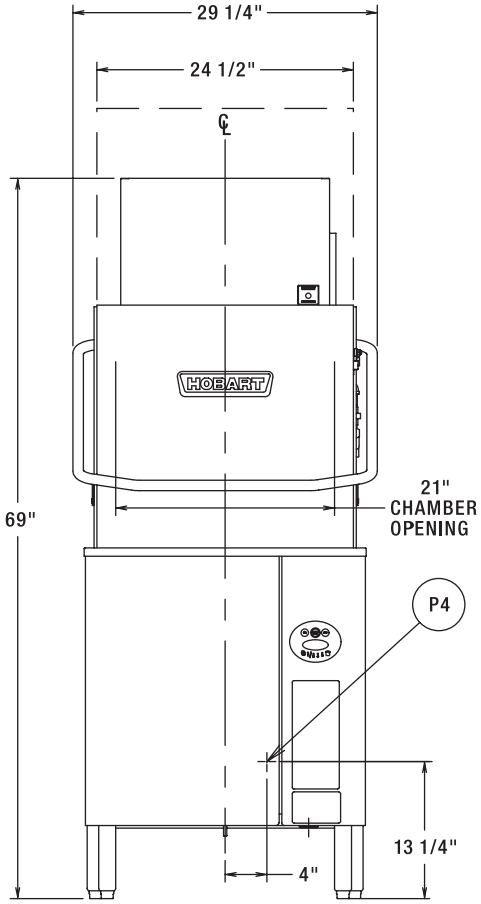

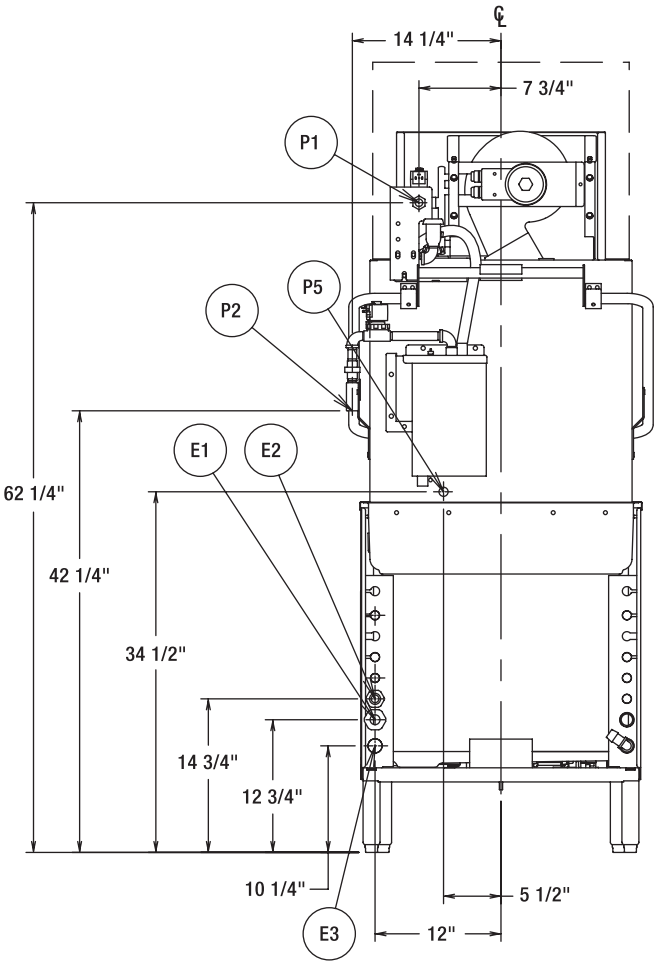

MODEL:
AM-15VL
E-941178
REV B

MACHINE
ELECTRICAL
SPECIFICATIONS

208-240/60/1
208-240/60/3
480/60/3

AM-15VL WITH ELECTRIC HEAT			
ELEC. SPECS	RATED AMPS	MINIMUM SUPPLY CIRCUIT CONDUCTOR AMPACITY	MAXIMUM OVERCURRENT PROTECTIVE DEVICE
208-240/60/1	43.0	50	50
208-240/60/3	24.9	30	30
480/60/3	13.4	15	15

WARNING

ELECTRICAL AND GROUNDING CONNECTIONS MUST COMPLY WITH THE APPLICABLE PORTIONS OF THE NATIONAL ELECTRICAL CODE AND/OR OTHER LOCAL ELECTRICAL CODES.

PLUMBING CONNECTIONS MUST COMPLY WITH APPLICABLE SANITARY, SAFETY, AND PLUMBING CODES.

HOBART
701 S Ridge Avenue, Troy, OH 45374
1-888-4HOBART • www.hobartcorp.com

AM SELECT VENTLESS DISHWASHER

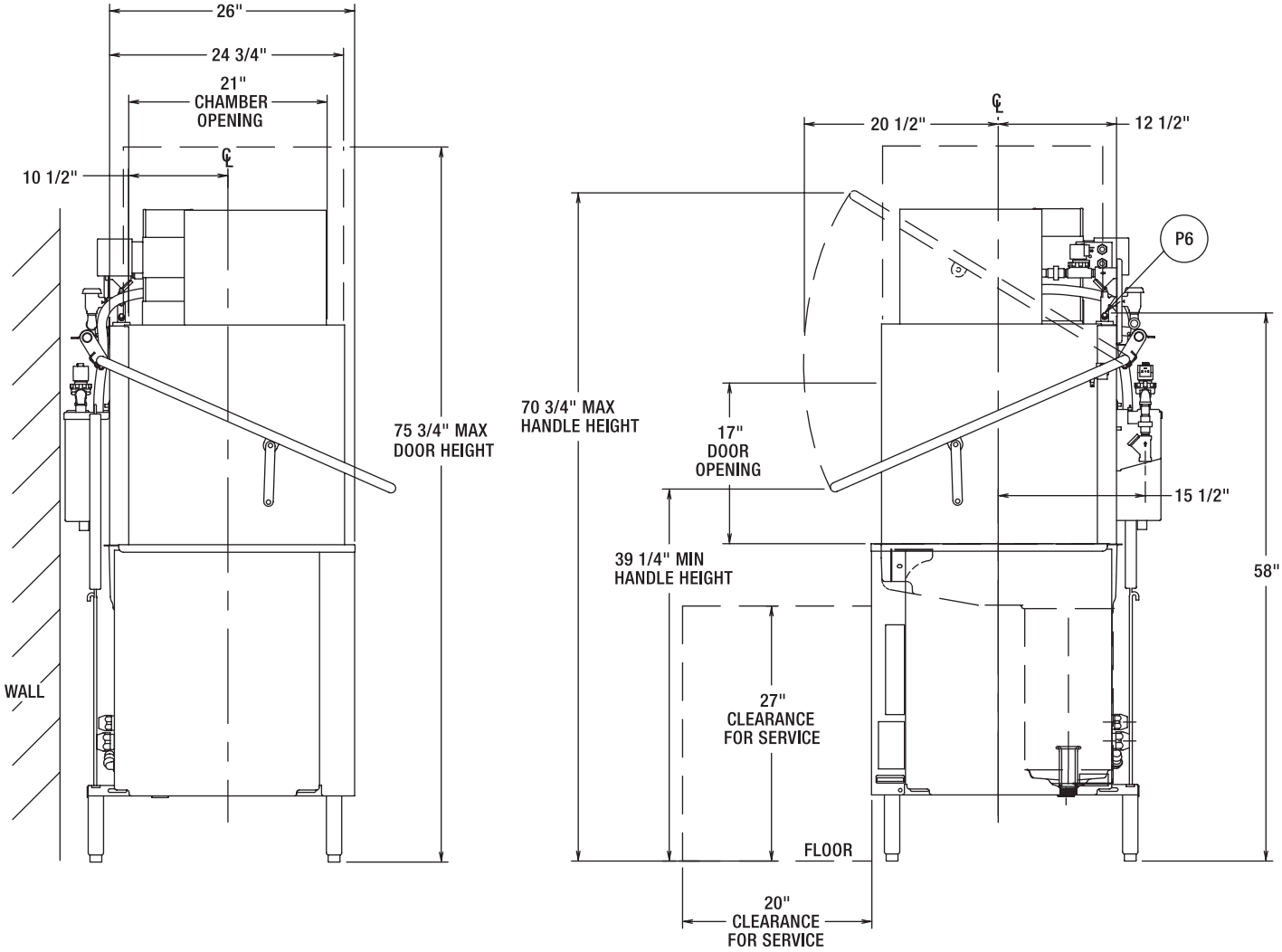

BOOSTER ELECTRICAL SPECIFICATIONS

208-240/60/1
208-240/60/3
480/60/3

BOOSTER AMPACITY RATINGS 8.5KW			
ELEC. SPECS	RATED AMPS	MINIMUM SUPPLY CIRCUIT CONDUCTOR AMPACITY	MAXIMUM OVERCURRENT PROTECTIVE DEVICE
208-240/60/1	35.4	50	50
208-240/60/3	20.4	30	30
480/60/3	10.2	15	15

OPTIONAL AM15VL SINGLE POINT ELECTRICAL SERVICE CONNECTION AS SHOWN BELOW			
ELEC. SPECS	RATED AMPS	MINIMUM SUPPLY CONDUCT OR AMPACITY	MAXIMUM PROTECTIVE DEVICE
208-240/60/3	45.4	60	60
480/60/3	23.7	30	30

The Boelter Companies, Inc.

AM SELECT
VENTLESS DISHWASHER

HOBART
701 S Ridge Avenue, Troy, OH 45374
1-888-4HOBART • www.hobartcorp.com

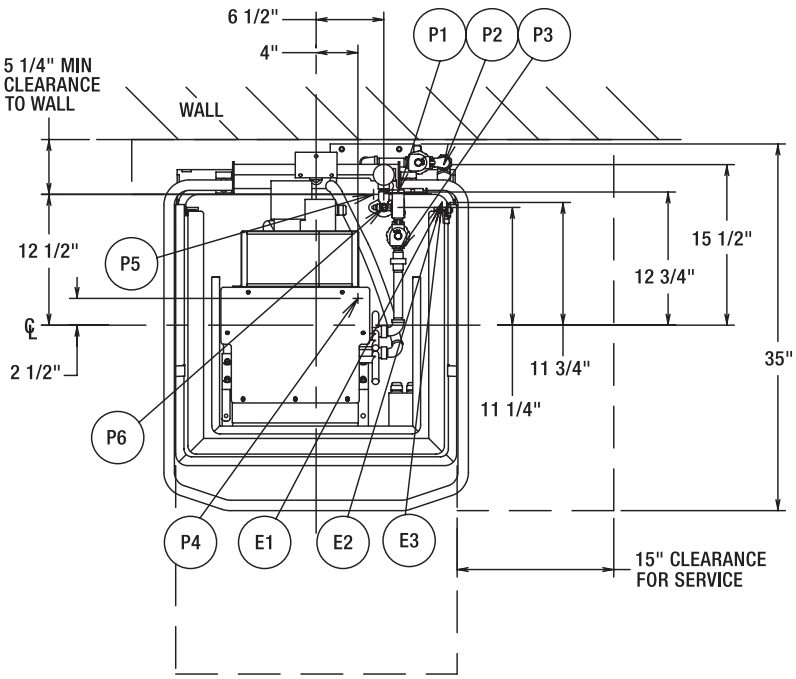

CONNECTION INFORMATION

(*AFF - ABOVE FINISHED FLOOR)

LEGEND

E1 ELECTRICAL CONNECTION: MOTORS & CONTROLS (INCLUDING ELECTRIC HEAT). 1" OR 3/4" CONDUIT HOLE;12-3/4" AFF.

E2 ELECTRICAL CONNECTION: RINSE AGENT FEEDER, 1/2" CONDUIT HOLE. (DPS1 & DPS2) 1.5 AMPS @ NAMEPLATE SUPPLY VOLTAGE. (RPS1 & RPS2) 1.5 AMPS @ NAMEPLATE SUPPLY VOLTAGE; 14-3/4" AFF.

E3 ELECTRICAL CONNECTION: ELECTRIC BOOSTER ONLY OR SINGLE POINT ELECTRICAL CONNECTION (3PH ONLY), 1" CONDUIT HOLE; 10-1/4" AFF.

P1 COLD WATER CONNECTION: 90°F MAX. (65°F OPTIMAL); 1/2" FPT; 62-1/4" AFF.

P2 HOT WATER CONNECTION: 110°F WATER MIN. (HOT WATER SANITIZING); 1/2" FPT; 42-1/4" AFF.

P3 DRAIN: 1-1/2" MPT; 7-1/4" AFF.

P4 DETERGENT PROBE SENSOR: REMOVE CAP AND STUD ASSEMBLY TO ACCESS 7/8" HOLE; 13-1/4" AFF.

P5 DETERGENT FEEDER: REMOVE CAP PLUG TO ACCESS 7/8" HOLE; 34-1/2" AFF

P6 RINSE AGENT FEEDER: 1/8" NPT, REMOVE 1/8" NPT PIPE PLUG TO ACCESS TAPPED HOLE; 58" AFF.

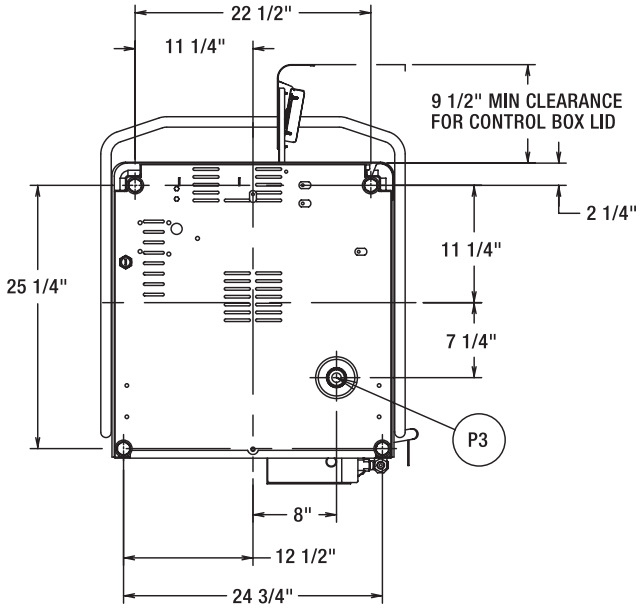

PLUMBING NOTES:

WATER HAMMER ARRESTOR (MEETING ASSE-1010 STANDARD OR EQUIVALENT) TO BE SUPPLIED (BY OTHERS) IN COMMON WATER SUPPLY LINE AT SERVICE CONNECTION.

RECOMMENDED WATER HARDNESS TO BE 3 GRAINS OR LESS FOR BEST RESULTS.

FOR CONVENIENCE WHEN CLEANING, WATER TAP SHOULD BE INSTALLED NEAR MACHINE WITH HEAVY DUTY HOSE AND SQUEEZE VALVE.

THIS IS A PUMPED RINSE MACHINE. PRESSURE REGULATING VALVE IS NOT NECESSARY ON HOT OR COLD LINES.

MISCELLANEOUS NOTES:

ALL DIMENSIONS TAKEN FROM FLOOR LINE MAY INCREASE 3/4" OR DECREASE 1/2" DEPENDING ON LEG ADJUSTMENT.

NET WEIGHT OF MACHINE: 371 LBS.
DOMESTIC SHIPPING WEIGHT: 451 LBS.

SIZE OF RACKS - 19-3/4" X 19-3/4"

DRAIN LEVER LOCATED INSIDE TANK.

SINGLE POINT ELECTRICAL CONNECTION AVAILABLE ON 3 PH MACHINES ONLY.

APPROXIMATE HEAT GAIN TO SPACE WITHOUT VENT HOOD	
TYPE	BTU/HR
LATENT	9,300
SENSIBLE	3,400

VENT HOOD IS NOT REQUIRED DUE TO INTERNAL CONDENSING SYSTEM.

CITY OF LA APPROVAL M-660004.

RECOMMENDED CONDENSE TIMES (BASED ON INCOMING WATER TEMP.)			
INCOMING TEMP. (F°)	CONDENSE TIME (SEC.)	RINSE TIME (SEC.)	RACKS PER HOUR (1 MIN. CYCLE)
60	30	10	40
65	33	11	37
70	36	12	36
75	39	13	34
80	42	14	33
85-90	45	15	32

The Boelter Companies, Inc.

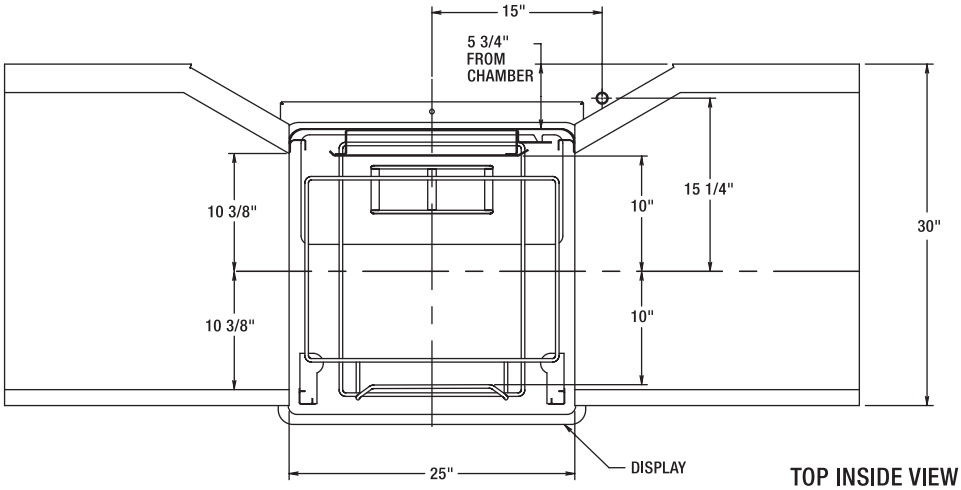

TOP INSIDE VIEW OF MACHINE

PASS THRU INSTALLATION

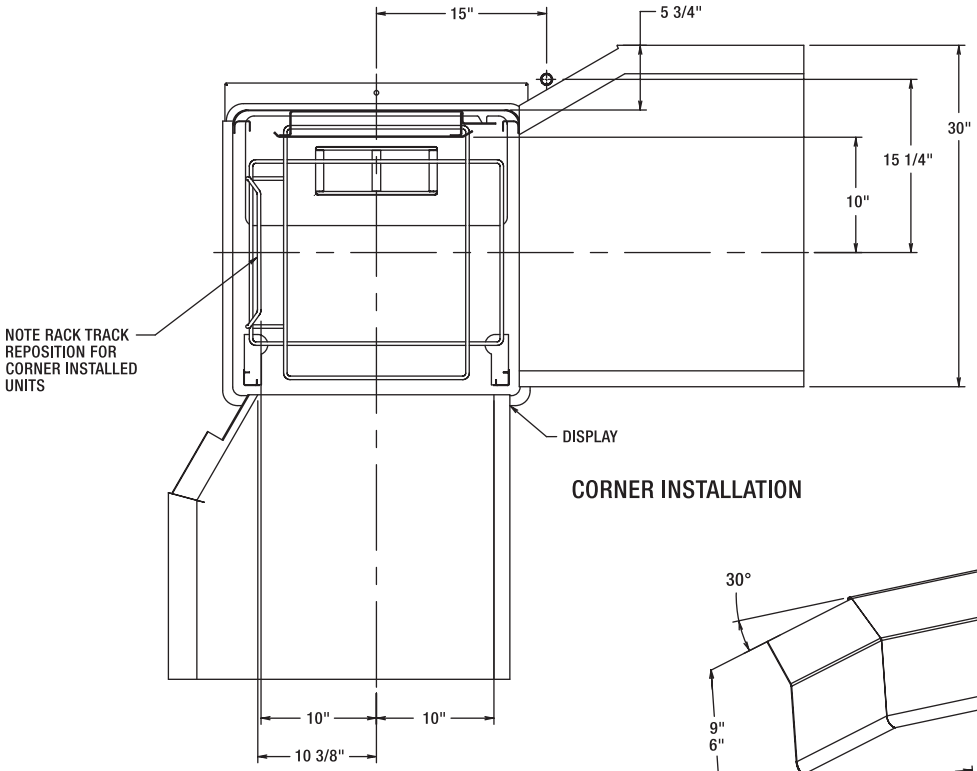

CORNER INSTALLATION

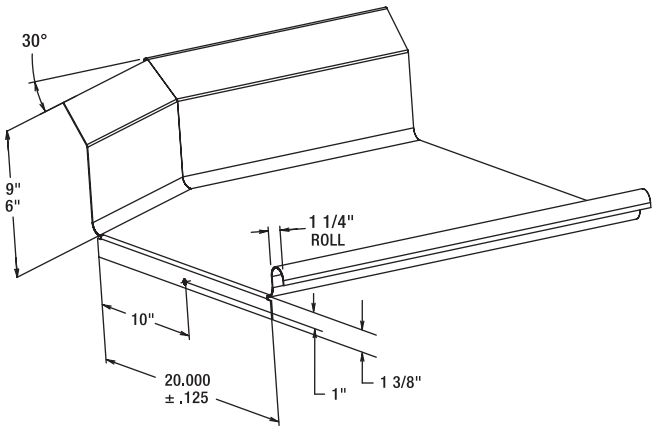

SUGGESTED TABLE DESIGN

AM SELECT
VENTLESS DISHWASHER

HOBART
701 S Ridge Avenue, Troy, OH 45374
1-888-4HOBART • www.hobartcorp.com

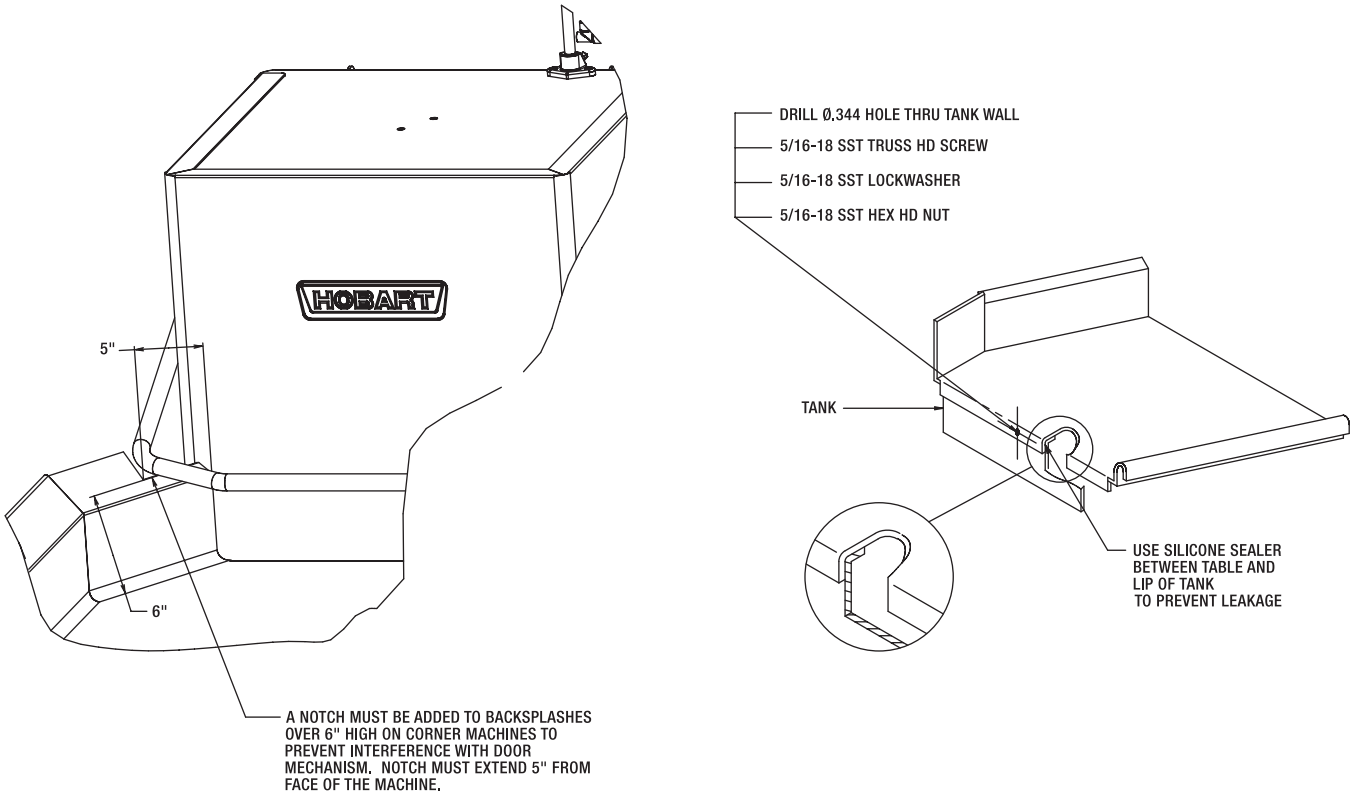

	AM Select Ventless
Machine Ratings (Mechanical) Racks per Hour (Max.)	40
Dishes per Hour (Average 25 per rack)	1,000
Glasses per Hour (Average 45 per rack)	1,800
Table to Table - Inside Tank at Table Connection (Inches)	25¼"
Overall Dimensions - (H x W x D) (Inches)	69" x 29¼" x 35"
Wash Motor H.P.	2
Wash Tank Capacity - Gallons	14
Wash Pump Capacity - Gallons per Minute - Weir Test	160
Electric Booster Heater (Kw)	8.5 Kw
Electric Heating Unit (Regulated)	5 Kw
Blower Motor H.P.	1/20
Rinse Pump Motor H.P.	1/15
Rinse - Minutes operated during hour of capacity operation	6.67
Seconds of rinse per rack	10
Rate of Rinse Flow - Gallons per Minute - at 20 lbs. Flow Pressure	4.4
Rinse Consumption - Gallons per Hour - **Maximum -** at 20 lbs. Flow Pressure	29.6
Rinse Cycle - Gallons per Rack - at 20 PSI Flow	.74 - 180°F Min.
Peak Rate of Drain Flow - Gallons per Minute (Initial rate with full tank)	38
Exhaust Requirements	0
Shipping Weight Crated - Approx. lbs. - Unit only	451

The microcomputer-based control system is built into the AM Select Ventless dishwasher. It is available in standard electrical specifications of 208-240/60/1, 208-240/60/3, 480/60/3 and is equipped with a reduced voltage pilot circuit transformer.

Water hardness must be controlled to 3 grains of hardness or less for best results.

CONSTRUCTION: Drawn tank, tank shelf and feet constructed of 16 gauge stainless steel. Wash chamber and front trim panel above motor compartment are polished, satin finish. Frame is 12 gauge stainless steel, chamber is 18 gauge, and removable trim panels are 20 gauge.

CHAMBER LIFT: Chamber coupled by stainless steel handle, spring counterbalanced. Chamber guided for ease of operation and long life.

WASH PUMP: With stainless steel pump and impeller, integral with motor assures alignment and quiet operation. Pump shaft seal with stainless steel parts and a carbon ceramic sealing interface. Easily removable impeller housing permits ease of inspection. Capacity 160 GPM. Pump is completely self-draining.

WASH PUMP MOTOR: Built for Hobart, 2 H.P., with inherent thermal protection, grease-packed ball bearings, splash-proof design, ventilated. Single-phase is capacitor-start, induction-run type. Three-phase is squirrel-cage, induction type.

RINSE PUMP: Powered by a 1/15 H.P. single phase motor, the rinse pump is made of high strength engineered composite material.

BLOWER: The condenser blower is an all stainless steel forward curved centrifugal wheel powered by a 1/20 H.P. TEFC single phase motor for nearly silent operation.

CONDENSER COIL: The condensing system using a tube and fin coil constructed of copper and corrosion resistant aluminum.

MICROCOMPUTER CONTROL SYSTEM: Hobart microcomputer controls, assembled within water-resistant enclosure, provide built-in performance and reliability.

The microcomputer control, relays and contactors are housed behind a stainless steel enclosure, hinged to provide easy access for servicing. The line voltage electrical components are completely wired with 105°C, 600V thermoplastic insulated wire with stranded conductors. Electrical components are wired with type ST cord. Line disconnect switch NOT furnished.

CYCLE OPERATION: The microcomputer-timing program is started by closing the doors, which actuates the door cycle switch. The cycle light turns ON. The microcomputer energizes the wash pump motor contactor during the wash portion of the program. After the wash, a dwell permits the upper wash manifold to drain. At the end of the dwell, the final rinse pump is energized. After the final rinse pump turns off, Sani-Dwell permits sanitization to continue. The Rinse display remains on during this period. The Blower and Cold Water Valve turn on for 30 seconds to condense the vapor laden air inside of the chamber. The display shows a count down time (in seconds) during this operation. After the 30 seconds is complete the Cycle Light turns OFF, completing the program. If the microcomputer is interrupted during a cycle by the door-cycle switch, the microcomputer is reset to the beginning of the program. 40 racks per hour – 87 seconds: 38 Second Wash, 2 Second Dwell, 10 Second Rinse, 7 Second Sani-Dwell. 30 Second Condensing. Other programs can be pre-selected by your Hobart service technician.

Manual wash cycle selector also provides selection of 2-, 4- or 6-minute wash cycles plus condense time for heavier washing applications.

WASH: Hobart revolving stainless steel wash arms with unrestricted openings above and below provide thorough distribution of water jets to all dishware surfaces. Arms are easily removable for cleaning and are interchangeable. Stainless steel tubing manifold connects upper and lower spray system.

RINSE: Rotating rinse arms, both upper and lower, feature 14 rinse nozzles. The stainless steel upper and lower rinse arms are easily removable without tools for inspection and are interchangeable. The motor driven rinse pump gives constant rinse pressure regardless of water service supply pressure. Easy open brass line strainer furnished.

HOT FILL: Microcomputer controlled fill is supplied from the hot water service connection. It enters the machine through an air gap system which protects the potable water supply from contamination. Ratio fill method is used giving the correct fill at any flowing water pressure.

COLD WATER: Cold water supplied to condenser coil is heated during the condensing period at the end of each cycle. This pre-heated water is supplied to the booster for subsequent heating.

HOBART

701 S Ridge Avenue, Troy, OH 45374
1-888-4HOBART • www.hobartcorp.com

DRAIN AND OVERFLOW: Large bell type automatic overflow and drain valve controlled from inside of machine. Drain automatically closed by lowering chamber. Drain seal is large diameter, high temperature "O" ring. Cover for overflow is integral part of the standpipe.

STRAINER SYSTEM: Equipped with large, exclusive self-flushing, easily removable perforated stainless steel, one-piece strainer and large capacity scrap basket. Submerged scrap basket minimizes frequent removal and cleaning.

HEATING EQUIPMENT: Standard tank heat is 5 KW electric immersion heating element. Water temperature regulation is controlled by thermistor sensor in combination with microcomputer controls. The tank heat and positive low water protection microcomputer circuits are automatically activated when the main power switch is turned "on". If tank is accidentally drained, low water protection device automatically turns heat off. These features are standard with the Hobart Microcomputer Control System.

ENERGY RECOVERY: Heat energy is recovered from the condensation of vapors in the chamber at the end of each cycle. This pre-heats the water for the next rinse cycle from 55°F up to 140°F.

ELECTRIC BOOSTER HEATER: 8.5 KW electric booster with Sense-A-Temp™ technology adequately sized to raise 110°F inlet water to 180°F.

ACCESSORIES: 19¾" x 19¾" peg and combination dish racks. Splash shield for corner installations. End of cycle audible alarm (field activated). Delime notification (field activated). Desirable functional accessories can be furnished at added cost. See listed options and accessories on this specification sheet. Write to the factory for special requirements not listed above.

As continued product improvement is a policy of Hobart, specifications are subject to change without notice.

LITHO IN U.S.A. (H-01) Printed On Recycled Paper

The Boelter Companies, Inc.

Commercial Kitchen Equipment Parts

Find more Hobart equipment resources at

parthubz.com/equipment/hobart

Need parts or service?

Call 833-700-8006

support@parthubz.com

parthubz.com