Commercial Kitchen Equipment Parts

HOBART AM16

Hobart AM16 Specification Sheet 2

Provided by PartHubz

parthubz.com

833-700-8006 | support@parthubz.com

HOBART

Project _____

AIA # _____ SIS # _____

Item # _____ Quantity _____ C.S.I. Section 114000

COMMERCIAL DISHWASHERS

AM16 SERIES – AM16-ASR ELECTRIC

AM16-ASR ELECTRIC

High Temperature Door-Style Dishwashing Machine

SPECIFIER STATEMENT

Specified unit will be Hobart AM16 ASR electric high temperature dishwashing machine. Features include automatic soil removal, 5-sided insulated hood, touchscreen controls with WiFi connectivity, NSF pot and pan rating for 2-, 4- & 6-minute cycles, 17" (432 mm) door opening, pumped drain, auto door start with auto fill, interchangeable stainless steel rinse arms and X-shaped wash arms, auto delime, advanced diagnostics and service connection, up to 52 racks per hour, .67 U.S. gallons (2.5 L) per rack pumped final rinse.

1 year parts and labor warranty.

STANDARD FEATURES

- .67 gallons (2.5 L) per rack pumped final rinse
- 52 racks per hour – hot water sanitizing
- Automatic soil removal (ASR)
- Pillar less opening
- 5-sided insulated hood
- User-friendly smart touchscreen controls
- Single point electrical connection standard, field convertible to dual point connection
- 3 phase standard, field convertible to single phase
- Wi-Fi connectivity
- SmartConnect app and cloud with machine status, temperature logs, error code reporting, and cost, consumption and usage analysis
- Temperature and chemical lock outs (with Hobart equipped chemical pumps)
- Pumped drain
- Timed wash cycles for 1, 2, 4 or 6 minutes
- NSF pot and pan rating for 2-, 4- & 6- minute cycles
- Sense-A-Temp™ 70°F (39°C) rise electric booster heater
- Self-draining, high efficiency wash pump with stainless steel impeller
- 17" (432 mm) door opening
- Stainless steel drawn tank, tank shelf, chamber, trim panels, frame and feet
- Spring counterbalanced chamber with reinforced, thermo-plastic rollers
- X-shaped revolving, interchangeable upper and lower anticlogging wash arms
- Revolving, interchangeable upper and lower rinse arms
- Slanted, self-locating, one-piece scrap screen and basket system
- Automatic fill
- Door actuated start
- AutoClean
- Drain water tempering kit
- Factory startup
- Vent fan control
- Service diagnostics
- Straight-through or corner installation
- Auto delime

OPTIONS & ACCESSORIES (Available at extra cost)

- ❑ Peg rack
- ❑ Combination rack
- ❑ ASR left hand conversion kit
- ❑ Chemical pumps
- ❑ Splash shield for corner installations
- ❑ Flanged and seismic feet
- ❑ Water hammer arrestor kit
- ❑ Door lock kit
- ❑ Rapid fill kit
- ❑ Sink integration kit
  - Sink saddle & 3" (76 mm) leg extension
  - Sink rail kit
  - Fold down table

Approved by _____ Date _____ Approved by _____ Date _____

AM16-ASR ELECTRIC
High Temperature
Door-Style Dishwashing Machine

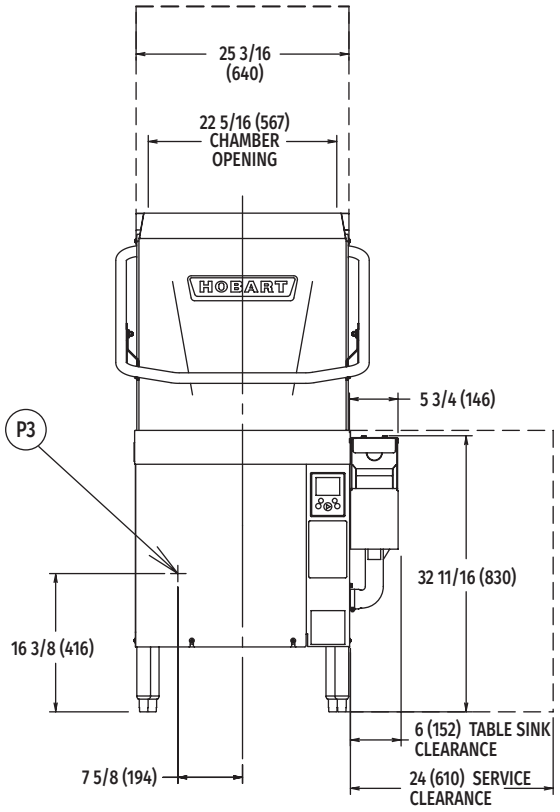

Front View

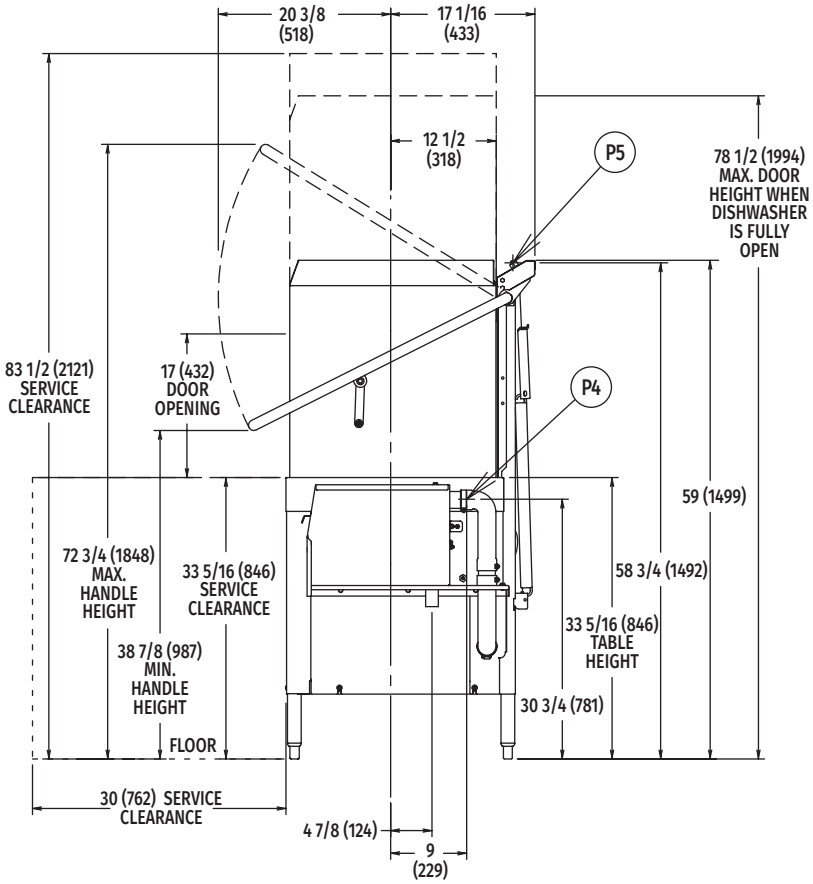

Right Side View

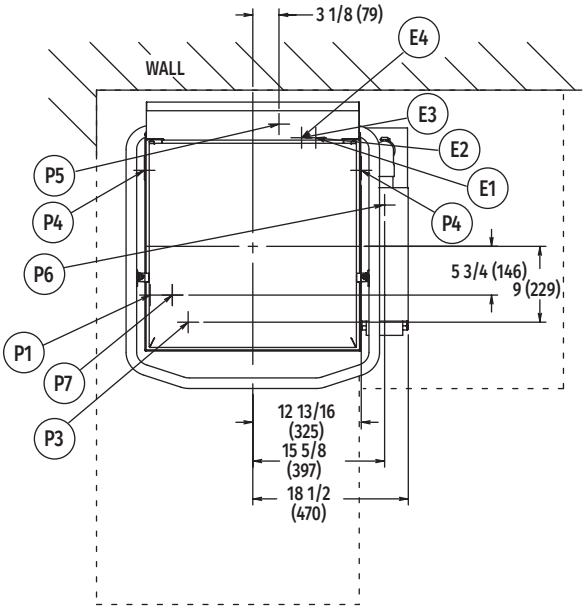

Top View

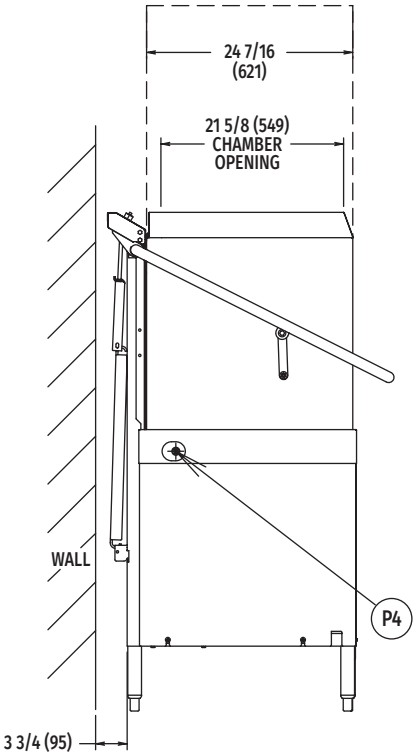

Left Side View

MODEL:
AM16-ASR
E-950440

CAD and/or Revit Files Available

AM16-ASR ELECTRIC
High Temperature
Door-Style Dishwashing Machine

WARNING: Electrical and grounding connections must comply with the applicable portion of the National Electrical Code and/or other local electrical codes.

Plumbing connections must comply with applicable sanitary, safety, and plumbing codes.

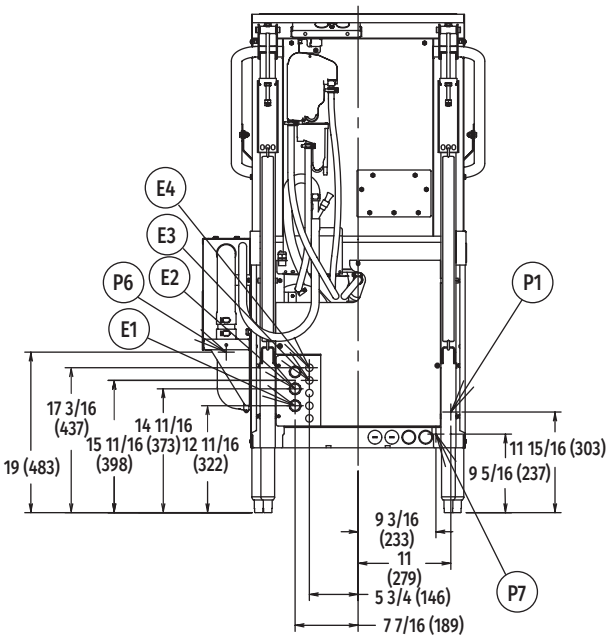

Rear View

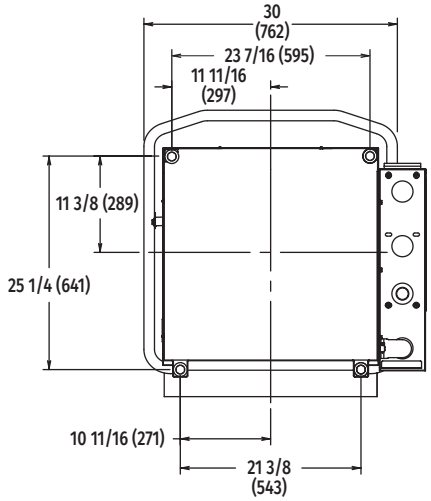

Bottom View

LEGEND

Electrical Connections	
E1	Electrical connection: wash pump motor & sump heater, 1" or 3/4" (25 or 19 mm) conduit hole; 12-11/16" (322 mm) AFF.
E2	Electrical connection: electric booster & controls only or single point electrical connection (3PH only), 1" or 3/4" (25 or 19 mm) conduit hole; 14-11/16" (373 mm) AFF.
E3	Electrical connection: detergent & rinse agent feeders, (DPS1 & DPS2) 1.5 amps @ nameplate supply voltage, (RPS1 & RPS2) 1.5 amps @ nameplate supply voltage; 1/2" (13 mm) conduit hole, 15-11/16" (398 mm) AFF.
E4	Electrical connection: vent fan control (VFC1 & VFC2) switching circuit only 1.5 amps @ nameplate supply voltage; 1/2" (13 mm) conduit hole, 17-3/16" (437 mm) AFF.
Plumbing Connections	
P1	Common water connection including booster heater: 110°F (43°C) water minimum, 15-65 PSI (103-448 kPa) recommended; 3/4" (19 mm) female garden hose fitting on 6' (1829 mm) long hose supplied with machine; 11-15/16" (303 mm) AFF.
P3	Detergent probe sensor: remove cap and stud assembly to access 7/8" (22 mm) hole; 16-3/8" (416 mm) AFF.
P4	Detergent feeder: two locations available. Remove cap and stud assembly to access 7/8" hole (22 mm); 30-3/4" (781 mm)AFF.
P5	Rinse agent feeder: remove 1/8" (3,2 mm) NPT pipe plug to access 1/8" (3,2 mm) NPT tapped hole; 58-3/4" (1492 mm) AFF.
P6	Drain connection: includes machine drain & drain water tempering (LH ASR accessory drain location on opposite side). 1-1/2" (38 mm) stainless steel tube fitting 19" (483 mm)AFF.
P7	Cold water connection: 55°F (13°C) water minimum (drain water tempering); 3/4" (19 mm) female garden hose fitting on 8' (2438 mm) long hose; 9-5/16" (237 mm) AFF.

SPECIFICATIONS

Capacities

Racks Per Hour (maximum) 52
Dishes per Hour (average 25 per rack) 1,300
Glasses per Hour (average 45 per rack) 2,340
Wash Tank (U.S. gallons/Liters) 10.5 (39,7)

Motor Horsepower (watts)

Rinse Pump 0.18 (134)
Wash Pump. 2 (1492)
ASR Pump 0.18 (134)
Drain Pump. 0.21 (157)

Rinse

Gallons (liters) per Rack. 0.67 (2,5)
Gallons (liters) per Hour (maximum consumption) 34.84 (132)

Peak Rate of Drain Flow

Gallons (liters) per Minute (initial rate with full tank) 18.5 (70)

Heating

Electric Booster (kW). 7.1
Electric Heating Unit (kW). 5.4

Exhaust Requirements . . . . . 450 CFM (12,7 m^3)

Shipping Weight (approximate) . . . . . 342 lbs. (155 kg)

Crated Dimensions . . . 65.125"H x 36.5"W x 36.5"L (1654 x 927 x 927 mm)

AM16-ASR ELECTRIC
High Temperature
Door-Style Dishwashing Machine

E1	AM16 with Electric Heat (When Field Converted to Dual Point)		
Voltage	Rated Amps	Minimum Supply Circuit Ampacity	Maximum Protective Device
208-240/60/1	39.6	50	50
208-240/60/3	26.9	30	30

E2	9.5 kW Booster & Controls Ampacity Ratings (When Field Converted to Dual Point)		
Voltage	Rated Amps	Minimum Supply Circuit Ampacity	Maximum Protective Device
208-240/60/1	43.3	50	50
208-240/60/3	26.6	30	30

E2	AM16 Single Point Electrical Service Connection as Shown Below		
Voltage	Rated Amps	Minimum Supply Circuit Ampacity	Maximum Protective Device
208-240/60/3	53.48	60	60

Approximate Heat Gain to Space without Vent Hood	
Type	BTU/Hr.
Latent	7,800
Sensible	4,000

Miscellaneous Notes: All dimensions taken from floor line may increase 7/8" (22 mm) or decrease 3/8" (9,5 mm) depending on leg adjustment.

Vent hood (if required) to provide a minimum 450 CFM (12.7 M^3) exhaust (ref installation instructions).

Net weight of machine including booster: 325 lbs (147 kg). Domestic shipping weight including booster: 345 lbs (156 kg).

Size of racks – 19¾" x 19¾" (502 x 502 mm).

Plumbing Notes: Water hammer arrestor (meeting ASSE-1010 standard or equivalent) to be supplied (by others) in common water supply line at service connection.

Recommended water hardness to be 3 grains (51.35 ppm) or less for best results.

Recommended building flowing water pressure to the dishwasher at or above 20 PSI (137.9 kPa). Pressures lower than 20 PSI (137.9 kPa) may affect machine fill/start-up times.

This is a pumped rinse machine. Pressure regulating valve is not necessary on hot or cold lines.

For convenience when cleaning, water tap should be installed near machine with heavy duty hose and squeeze valve.

AM16-ASR TABLING CONFIGURATIONS AND TRACK DESIGN

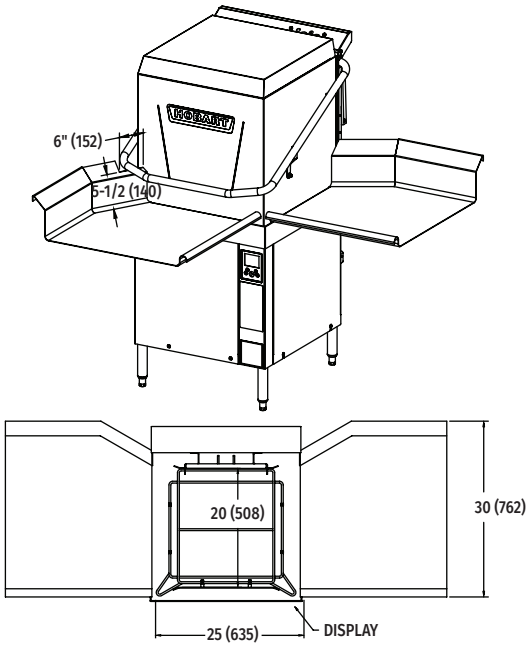

Pass Thru Installation

Top Inside View of Machine

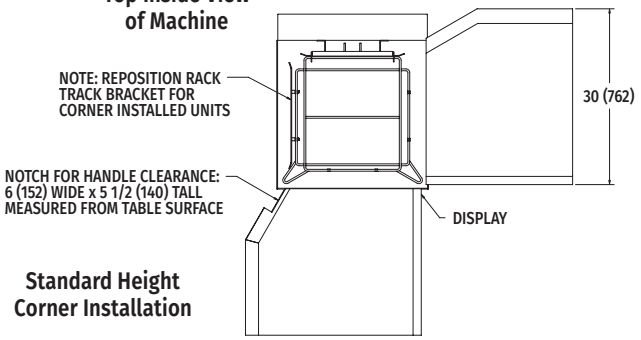

Standard Height Corner Installation

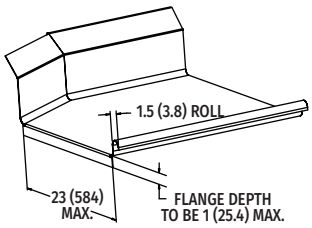

Suggested Table Design

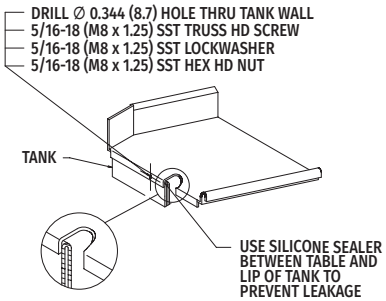

As continued product improvement is a policy of Hobart, specifications are subject to change without notice.

HOBART CANADA • 105 Gordon Baker Rd, Suite 801, Toronto, ON M2H 3P8 • 1-800-334-2371 • www.hobart.ca

Commercial Kitchen Equipment Parts

Find more Hobart equipment resources at

parthubz.com/equipment/hobart

Need parts or service?

Call 833-700-8006

support@parthubz.com

parthubz.com