Commercial Kitchen Equipment Parts

# HOBART AM16

## Hobart AM16 Specification Sheet 6

**Provided by PartHubz**

parthubz.com

833-700-8006 | support@parthubz.com

HOBART

Project _____

AIA # _____ SIS # _____

Item # _____ Quantity _____ C.S.I. Section 114000

COMMERCIAL DISHWASHERS

AM16 SERIES – AM16VL-BAS BASE ELECTRIC VENTLESS

# AM16VL-BAS BASE ELECTRIC

## High Temperature Ventless Door-Style Dishwashing Machine

## SPECIFIER STATEMENT

Specified unit will be a Hobart AM16 Base electric high temperature ventless dishwashing machine. Features include 5-sided insulated hood, ventless operation & energy recovery, door lock, touch-screen controls with WiFi connectivity, NSF pot and pan rating for 2-, 4- & 6-minute cycles, 17" (432 mm) door opening, pumped drain, auto door start with auto fill, interchangeable stainless steel rinse arms and X-shaped wash arms, delime cycle, advanced diagnostics and service connection, up to 45 racks per hour, .67 U.S. gallons (2.5 L) per rack pumped final rinse.

**1 year parts and labor warranty.**

## STANDARD FEATURES

+ .67 gallons (2.5 L) per rack pumped final rinse
+ 45 racks per hour – hot water sanitizing
+ Two stage filtration
+ Pillar less opening
+ 5-sided insulated hood
+ User-friendly smart touchscreen controls
+ Single point electrical connection standard, field convertible to dual point connection
+ 3 phase standard, field convertible to single phase
+ WiFi connectivity
+ SmartConnect app and cloud with machine status, temperature logs, error code reporting, and cost, consumption and usage analysis
+ Temperature and chemical lock outs with Hobart equipped chemical pumps
+ Pumped drain
+ Ventless operation & energy recovery
+ Door lock
+ Timed wash cycles for 1, 2, 4 or 6 minutes
+ NSF pot and pan rating for 2-, 4- & 6- minute cycles
+ Sense-A-Temp™ 70°F (39°C) rise electric booster heater
+ Self-draining, high efficiency wash pump with stainless steel impeller
+ 17" (432 mm) door opening
+ Stainless steel drawn tank, tank shelf, chamber, trim panels, frame and feet
+ Spring counterbalanced chamber with reinforced, thermo-plastic rollers
+ X- shaped revolving, interchangeable upper and lower anti-clogging wash arms
+ Revolving, interchangeable upper and lower rinse arms
+ Slanted, self-locating, one-piece scrap screen and basket system
+ Automatic fill
+ Door actuated start
+ AutoClean
+ Factory startup
+ Service diagnostics
+ Straight-through or corner installation
+ Delime cycle with notification (field activated)

## OPTIONS & ACCESSORIES (Available at extra cost)

- ❑ Peg rack
- ❑ Combination rack
- ❑ Chemical pumps
- ❑ Drain water tempering kit
- ❑ Splash shield for corner installations
- ❑ Flanged and seismic feet
- ❑ Water hammer arrestor kit
- ❑ Rapid fill kit
- ❑ Sink integration kit
  - Sink saddle & 3" (76 mm) leg extension
  - Sink rail kit
  - Fold down table

Approved by _____ Date _____ Approved by _____ Date _____

# AM16VL-BAS BASE ELECTRIC

## High Temperature Ventless Door-Style Dishwashing Machine

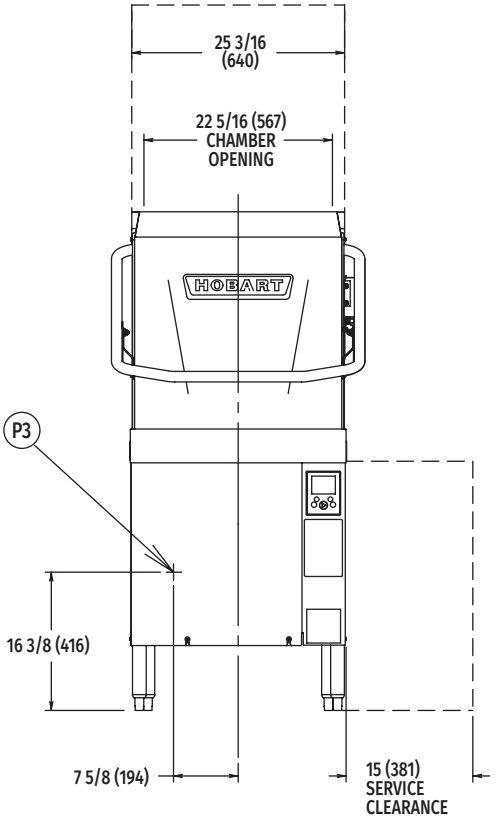


Front View

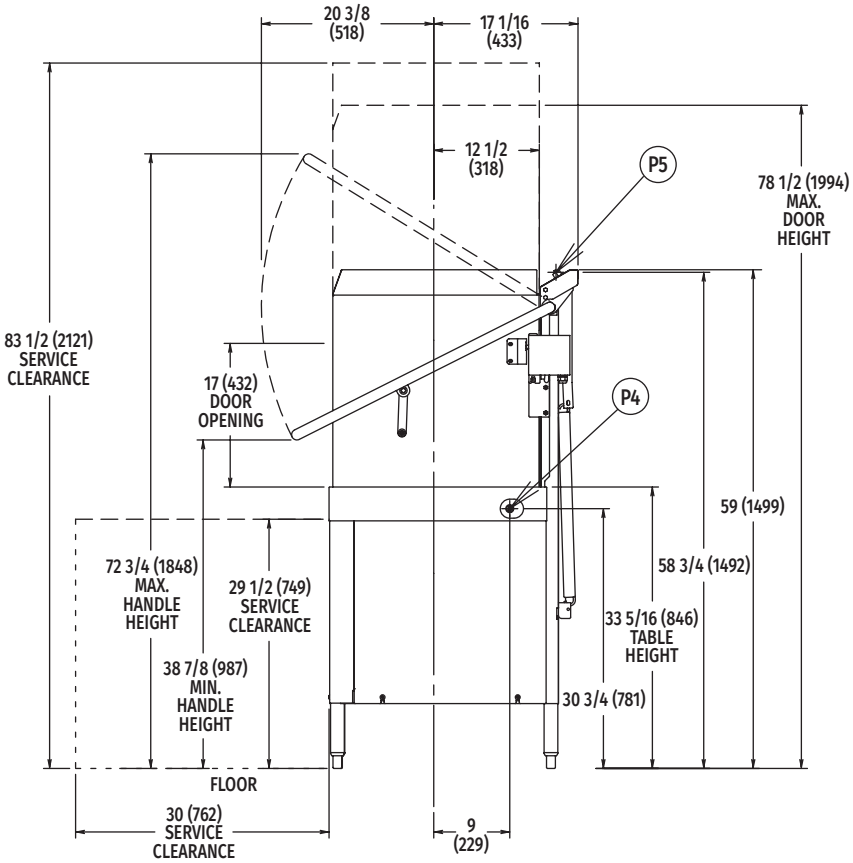


Right Side View

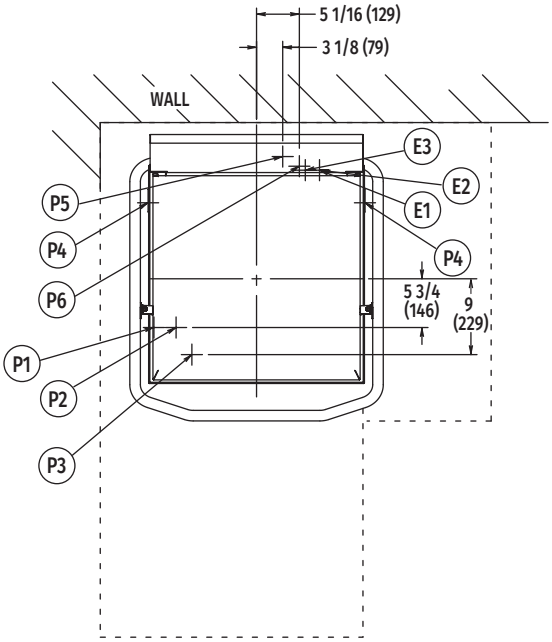


Top View

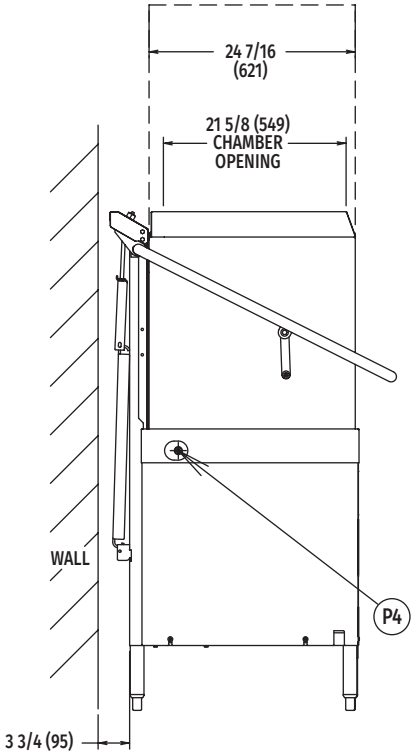


Left Side View

MODEL:
AM16VL-BAS
E-950440



CAD and/or Revit Files Available

# AM16VL-BAS BASE ELECTRIC

## High Temperature Ventless Door-Style Dishwashing Machine

**WARNING: Electrical and grounding connections must comply with the applicable portion of the National Electrical Code and/or other local electrical codes.**

**Plumbing connections must comply with applicable sanitary, safety, and plumbing codes.**

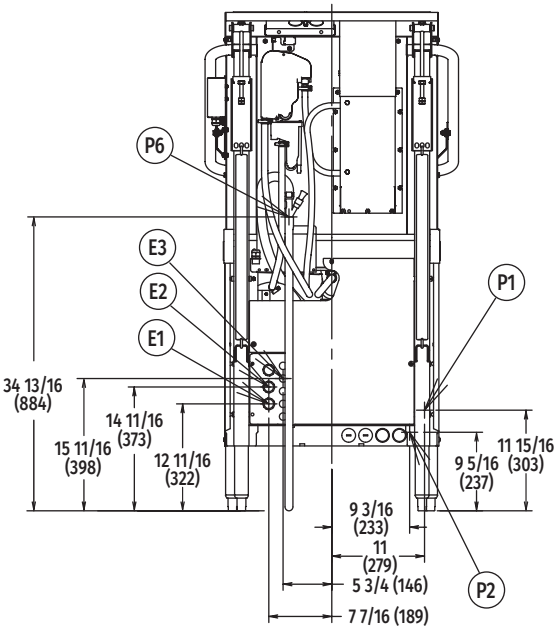


**Rear View**

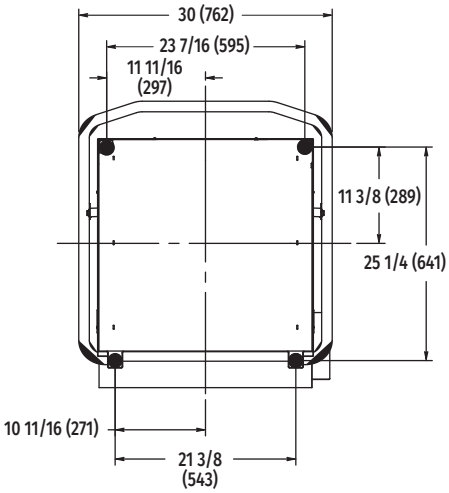


**Bottom View**

## LEGEND

| Electrical Connections | |
|---|---|
| **E1** | Electrical connection: wash pump motor & sump heater, 1" or 3/4" (25 or 19 mm) conduit hole; 12-11/16" (322 mm) AFF. |
| **E2** | Electrical connection: electric booster & controls only or single point electrical connection (3PH only), 1" or 3/4" (25 or 19 mm) conduit hole; 14-11/16" (373 mm) AFF. |
| **E3** | Electrical connection: detergent & rinse agent feeders, (DPS1 & DPS2) 1.5 amps @ nameplate supply voltage, (RPS1 & RPS2) 1.5 amps @ nameplate supply voltage; 1/2" (13 mm) conduit hole, 15-11/16" (398 mm) AFF. |
| **Plumbing Connections** | |
| **P1** | Common water connection including booster heater: 55°F (13°C) water minimum, 15-65 PSI (103-448 kPa) recommended; 3/4" (19 mm) female garden hose fitting on 6' (1829 mm) long hose supplied with machine; 11-15/16" (303 mm) AFF. |
| **P2** | Optional – hot water connection: 110°F (43C) water minimum (rapid fill accessory - when ordered); 3/4" (19 mm) female garden hose fitting on 6' (1829) long hose; 9-5/16" (237 mm) AFF. |
| **P3** | Detergent probe sensor: remove cap and stud assembly to access 7/8" (22 mm) hole; 16-3/8" (416 mm) AFF. |
| **P4** | Detergent feeder: two locations available. Remove cap and stud assembly to access 7/8" hole (22 mm); 30-3/4" (781 mm)AFF. |
| **P5** | Rinse agent feeder: remove 1/8" (3,2 mm) NPT pipe plug to access 1/8" (3,2 mm) NPT tapped hole; 67-5/8" (1718 mm) AFF. |
| **P6** | Drain connection: 5/8" (16 mm) barb fitting with 6' (1829 mm) long hose supplied with machine; 34-13/16" (884 mm) AFF. Maximum height 40" (1016) AFF. |

## SPECIFICATIONS

**Capacities**

Racks Per Hour (maximum) . . . . . 45
Dishes per Hour (average 25 per rack) . . . . . 1,125
Glasses per Hour (average 45 per rack) . . . . . 2,025
Wash Tank (U.S. gallons/Liters) . . . . . 10.5 (39,7)

**Motor Horsepower (watts)**

Rinse Pump . . . . . 0.18 (134)
Wash Pump. . . . . 2 (1492)
Blower. . . . . 0.05 (37.3)
Drain Pump. . . . . 0.21 (157)

**Rinse**

Gallons (liters) per Rack. . . . . 0.67 (2,5)
Gallons (liters) per Hour (maximum consumption) . . . . . 30.15 (114)

**Peak Rate of Drain Flow**

Gallons (liters) per Minute (initial rate with full tank) . . . . . 18.5 (70)

**Heating**

Electric Booster (kW). . . . . 7.1
Electric Heating Unit (kW). . . . . 5.4

**Shipping Weight (approximate)** . . . . . 322 lbs. (146 kg)

**Crated Dimensions** . . . 65.125"H x 36.5"W x 36.5"L (1654 x 927 x 927 mm)

# AM16VL-BAS BASE ELECTRIC

## High Temperature Ventless Door-Style Dishwashing Machine

| E1 | AM16 with Electric Heat (When Field Converted to Dual Point) | | |
|---|---|---|---|
| Voltage | Rated Amps | Minimum Supply Circuit Ampacity | Maximum Protective Device |
| 208-240/60/1 | 39.6 | 50 | 50 |
| 208-240/60/3 | 26.9 | 30 | 30 |
| 480/60/3 | 10.5 | 15 | 15 |

| E2 | 9.5 kW Booster & Controls Ampacity Ratings (When Field Converted to Dual Point) | | |
|---|---|---|---|
| Voltage | Rated Amps | Minimum Supply Circuit Ampacity | Maximum Protective Device |
| 208-240/60/1 | 43.3 | 50 | 50 |
| 208-240/60/3 | 26.6 | 30 | 30 |
| 480/60/3 | 13.4 | 15 | 15 |

| E2 | AM16 Single Point Electrical Service Connection as Shown Below | | |
|---|---|---|---|
| Voltage | Rated Amps | Minimum Supply Circuit Ampacity | Maximum Protective Device |
| 208-240/60/3 | 53.5 | 60 | 60 |
| 480/60/3 | 24.0 | 30 | 30 |

| Approximate Heat Gain to Space without Vent Hood | |
|---|---|
| Type | BTU/Hr. |
| Latent | 4,300 |
| Sensible | 3,500 |

**Miscellaneous Notes:** All dimensions taken from floor line may increase 7/8" (22 mm) or decrease 3/8" (9,5 mm) depending on leg adjustment.

Vent hood (if required) to provide a minimum 450 CFM (12.7 $M^3$) exhaust (ref installation instructions).

Net weight of machine including booster: 305 lbs (138 kg). Domestic shipping weight including booster: 325 lbs (147 kg).

Size of racks – 19¾" x 19¾" (502 x 502 mm).

**Plumbing Notes:** Water hammer arrestor (meeting ASSE-1010 standard or equivalent) to be supplied (by others) in common water supply line at service connection.

Recommended water hardness to be 3 grains or less for best results.

Recommended building flowing water pressure to the dishwasher at or above 20 PSI. Pressures lower than 20 PSI may affect machine fill/start-up times.

This is a pumped rinse machine. Pressure regulating valve is not necessary.

For convenience when cleaning, water tap should be installed near machine with heavy duty hose and squeeze valve.

## AM16VL-BAS TABLING CONFIGURATIONS AND TRACK DESIGN

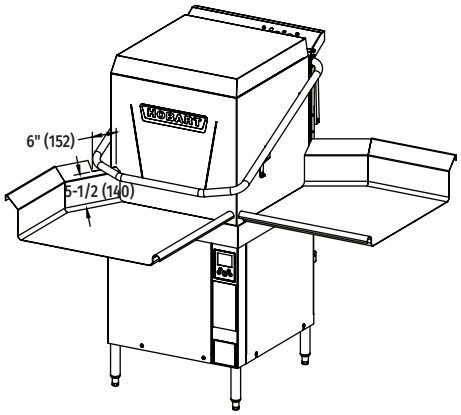


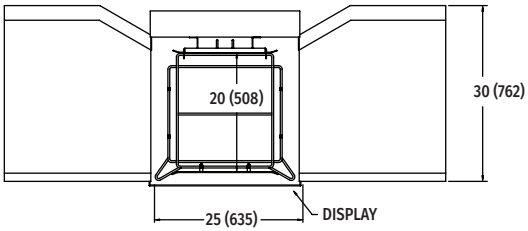


Pass Thru Installation

Top Inside View of Machine

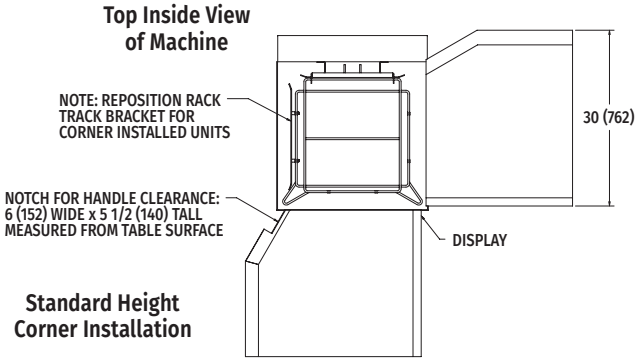


Standard Height Corner Installation

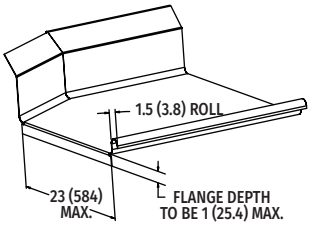


Suggested Table Design

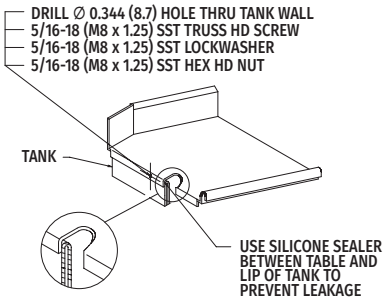


As continued product improvement is a policy of Hobart, specifications are subject to change without notice.



HOBART CANADA • 105 Gordon Baker rd, Suite 801, Toronto, ON M2H 3P8 • 1-800-334-2371 • www.hobart.ca

Commercial Kitchen Equipment Parts

Find more Hobart equipment resources at

**parthubz.com/equipment/hobart**

---

## Need parts or service?

Call 833-700-8006

support@parthubz.com

parthubz.com