Commercial Kitchen Equipment Parts

HOBART AM16VL-ADV

Hobart AM16VL-ADV Specification Sheet

Provided by PartHubz

parthubz.com

833-700-8006 | support@parthubz.com

HOBART

Project _____

AIA # _____ SIS # _____

Item # _____ Quantity _____ C.S.I. Section 114000

COMMERCIAL DISHWASHERS

AM16 SERIES – AM16VL-ADV advansys ELECTRIC

AM16VL-ADV advansys™ ELECTRIC

High Temperature Ventless Door-Style Dishwashing Machine

SPECIFIER STATEMENT

Specified unit will be a Hobart AM16 Advansys™ electric high temperature ventless dishwashing machine. Features include drain water energy recovery, automatic soil removal, 5-sided insulated hood, ventless operation and energy recovery, door lock, touchscreen controls with WiFi connectivity, NSF pot and pan rating for 2-, 4-& 6-minute cycles, 17" door opening, pumped drain, auto door start with auto fill, interchangeable stainless steel rinse arms and X-shaped wash arms, auto delime, advanced diagnostics and service connection, up to 40 racks per hour, .67 U.S. gallons per rack pumped final rinse.

1 year parts and labor warranty.

STANDARD FEATURES

+ .67 gallons per rack pumped final rinse
+ 40 racks per hour – hot water sanitizing
+ Drain water energy recovery (DWER)
+ Automatic soil removal (ASR)
+ Ventless energy recovery
+ Pillarless opening
+ 5-sided insulated hood
+ User-friendly smart touchscreen controls
+ Single point electrical connection standard, field convertible to dual point connection
+ 3 phase standard, field convertible to single phase
+ WiFi connectivity
+ SmartConnect app and cloud with machine status, temperature logs, error code reporting, and cost, consumption and usage analysis
+ Temperature and chemical lock outs (with Hobart equipped chemical pumps)
+ Pumped drain
+ Door lock
+ Timed wash cycles for 1, 2, 4 or 6 minutes
+ NSF pot and pan rating for 2-, 4- & 6- minute cycles
+ Sense-A-Temp™ 70°F rise electric booster heater
+ Self-draining, high efficiency wash pump with stainless steel impeller
+ 17" door opening
+ Stainless steel drawn tank, tank shelf, chamber, trim panels, frame and feet
+ Spring counterbalanced chamber with reinforced, thermo-plastic rollers
+ X- shaped revolving, interchangeable upper and lower anticlogging wash arms
+ Revolving, interchangeable upper and lower rinse arms
+ Slanted, self-locating, one-piece scrap screen and basket system
+ Automatic fill
+ Door actuated start
+ AutoClean
+ Factory installed drain water tempering kit
+ Factory startup
+ Service diagnostics
+ Straight-through or corner installation
+ Auto delime

OPTIONS & ACCESSORIES (Available at extra cost)

- ❑ Peg, combination and wine rack
- ❑ ASR left hand conversion kit
- ❑ Chemical pumps
- ❑ Splash shield for corner installations
- ❑ Flanged and seismic feet
- ❑ Water hammer arrestor kit
- ❑ Rapid fill kit
- ❑ Prison package
- ❑ Marine package

Approved by_____ Date_____ Approved by_____ Date_____

AM16VL-ADV advansys™ ELECTRIC

High Temperature Ventless Door-Style Dishwashing Machine

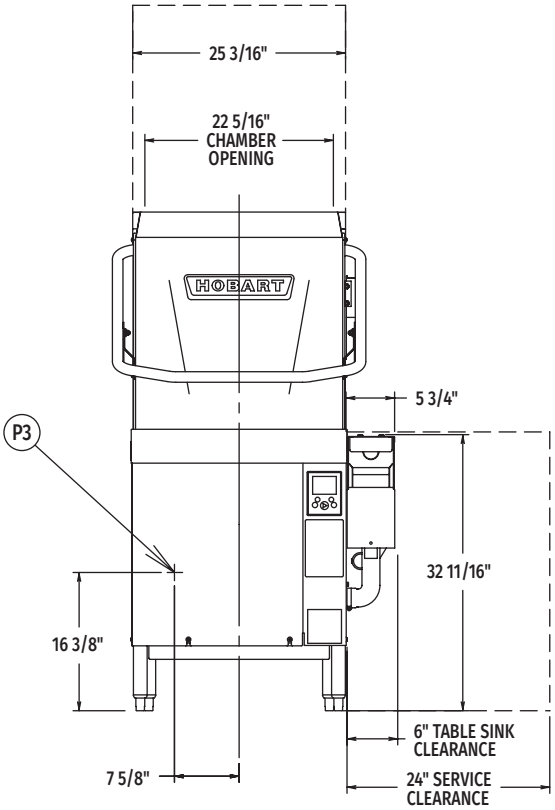

Front View

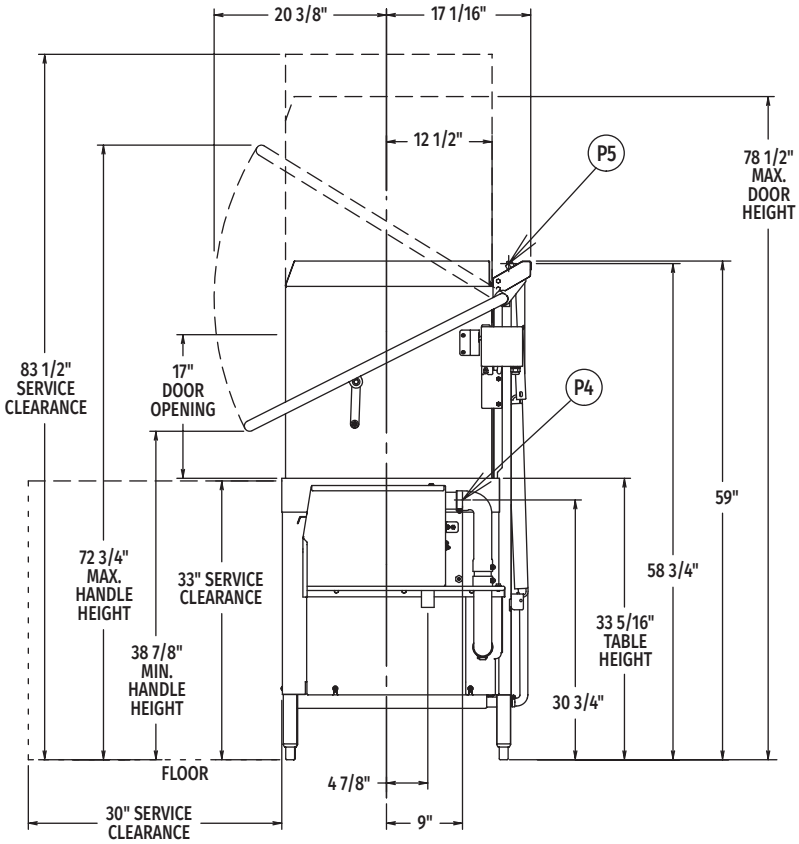

Right Side View

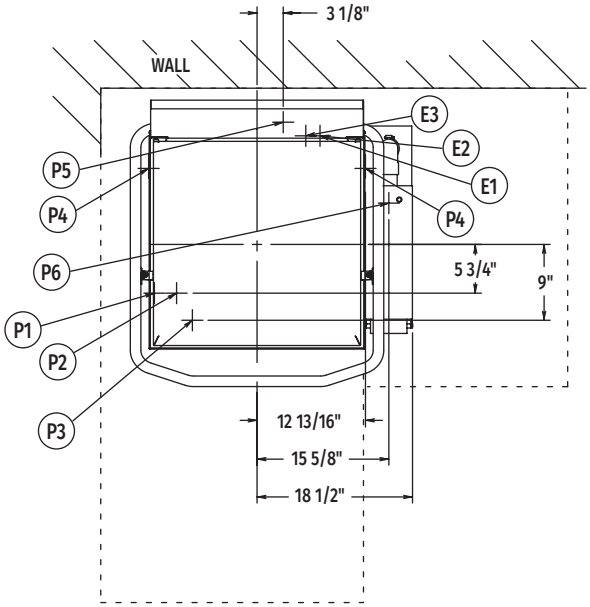

Top View

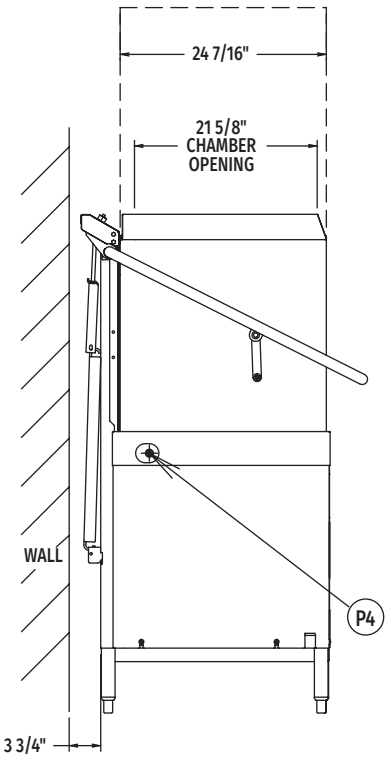

Left Side View

MODEL:
AM16VL-ADV
E-950440

CAD and/or Revit Files Available

AM16VL-ADV advansys™ ELECTRIC

High Temperature Ventless Door-Style Dishwashing Machine

WARNING: Electrical and grounding connections must comply with the applicable portion of the National Electrical Code and/or other local electrical codes.

Plumbing connections must comply with applicable sanitary, safety, and plumbing codes.

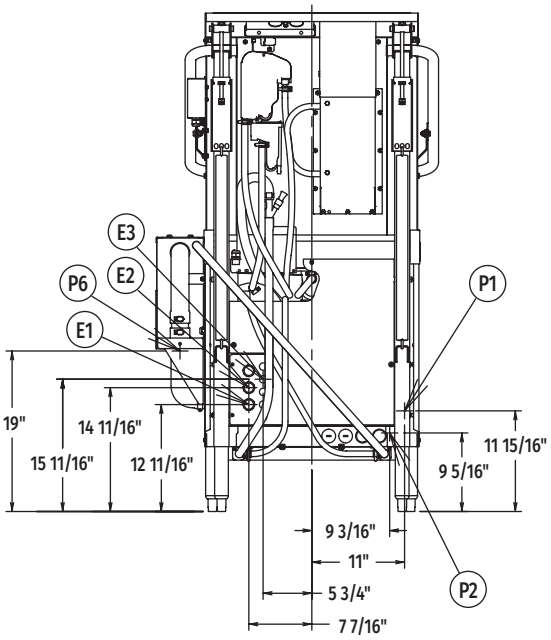

Rear View

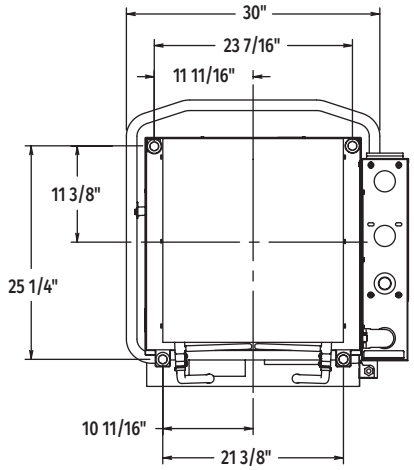

Bottom View

LEGEND

Electrical Connections	
E1	Electrical connection: wash pump motor & sump heater, 1" or 3/4" conduit hole; 12-11/16" AFF.
E2	Electrical connection: electric booster & controls only or single point electrical connection (3PH only) 1" or 3/4" conduit hole; 14-11/16" AFF.
E3	Electrical connection: detergent & rinse agent feeders, (DPS1 & DPS2) 1.5 amps @ nameplate supply voltage, (RPS1 & RPS2) 1.5 amps @ nameplate supply voltage; 1/2" conduit hole, 15-11/16" AFF.
Plumbing Connections	
P1	Common water connection including booster heater: 55°F water minimum, 15-65 PSI recommended; 3/4" female garden hose fitting on 6' long hose supplied with machine; 11-15/16" AFF.
P2	Optional – hot water connection: 110°F water minimum (rapid fill accessory - when ordered); 3/4" female garden hose fitting on 6' long hose; 9-5/16" AFF.
P3	Detergent probe sensor: remove cap and stud assembly to access 7/8" hole; 16-3/8" AFF.
P4	Detergent feeder: two location available; remove cap and stud assembly to access 7/8" hole; 30-3/4" AFF.
P5	Rinse agent feeder: remove 1/8" NPT pipe plug to access 1/8" NPT tapped hole; 58-3/4" AFF.
P6	Drain connection: includes machine drain & drain water tempering (LH ASR accessory drain location on opposite side); 1-1/2" stainless steel tube fitting 19" AFF.

SPECIFICATIONS

Capacities
- Racks Per Hour (maximum) 40
- Dishes per Hour (average 25 per rack) 1,000
- Glasses per Hour (average 45 per rack) 1,800
- Wash Tank (U.S. gallons) 10.5

Motor Horsepower
- Rinse Pump 0.18
- Wash Pump 2
- ASR Pump 0.18
- Drain Pump 0.21
- Blower 0.05

Rinse
- Gallons per Rack 0.67
- Gallons per Hour (maximum consumption) 26.8

Peak Rate of Drain Flow
- Gallons per Minute (initial rate with full tank) 18.5

Heating
- Electric Booster (kW) 7.1
- Electric Heating Unit (kW) 5.4

Shipping Weight (approximate) . . . . . 377 lbs.

Crated Dimensions . . . . . 65.125"H x 36.5"W x 36.5"L

AM16VL-ADV advansys™ ELECTRIC

High Temperature Ventless Door-Style Dishwashing Machine

E1	AM16 with Electric Heat (When Field Converted to Dual Point)		
Voltage	Rated Amps	Minimum Supply Circuit Ampacity	Maximum Protective Device
208-240/60/1	39.6	50	50
208-240/60/3	26.9	30	30
480/60/3	10.5	15	15

E2	Booster & Controls (When Field Converted to Dual Point)		
Voltage	Rated Amps	Minimum Supply Circuit Ampacity	Maximum Protective Device
208-240/60/1	43.3	50	50
208-240/60/3	26.6	30	30
480/60/3	13.4	15	15

E2	AM16 Single Point Electrical Service Connecton as Shown Below		
Voltage	Rated Amps	Minimum Supply Circuit Ampacity	Maximum Protective Device
208-240/60/3	53.5	60	60
480/60/3	23.9	30	30

Approximate Heat Gain to Space without Vent Hood	
Type	BTU/Hr.
Latent	3,200
Sensible	3,700

Miscellaneous Notes: All dimensions taken from floor line may increase 7/8" or decrease 3/8" depending on leg adjustment.

Vent hood (if required) to provide a minimum 450 CFM exhaust (ref installation instructions).

Net weight of machine including booster: 360 lbs.
Domestic shipping weight including booster: 380 lbs.

Size of racks – 19-3/4" x 19-3/4".

Backflow prevention provided by NSF-approved air gap device.

For optimal performance, Hobart recommends maintaining a dishroom temperature of 65°F (18°C) or higher, as lower temperatures may hinder the machine's capacity to operate effectively (with lower performance as ambient temperature decreases).

Plumbing Notes: Water hammer arrestor (meeting ASSE-1010 standard or equivalent) to be supplied (by others) in common water supply line at service connection.

Recommended water hardness to be 3 grains or less for best results.

Note: Electric heating unit & booster (kW) calculated at 208V.

Recommended building flowing water pressure to the dishwasher at or above 20 PSI. Pressures lower than 20 PSI may affect machine fill/start-up times.

This is a pumped rinse machine. Pressure regulating valve is not necessary on hot or cold lines.

For convenience when cleaning, water tap should be installed near machine with heavy duty hose and squeeze valve.

AM16VL-ADV TABLING CONFIGURATIONS AND TRACK DESIGN

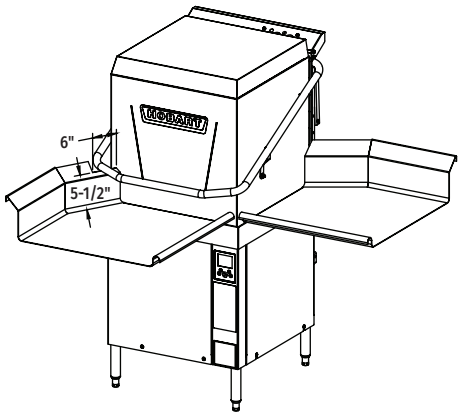

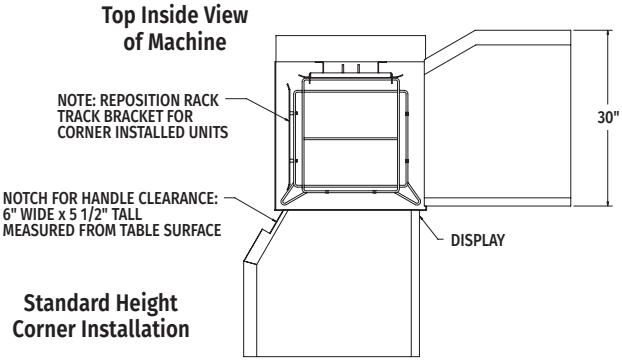

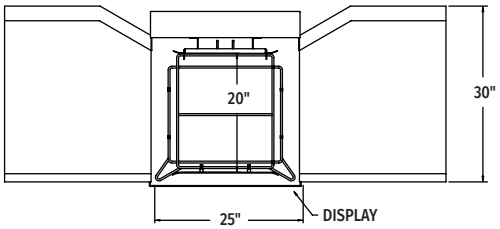

Pass Thru Installation

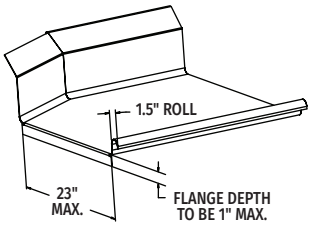

Suggested Table Design

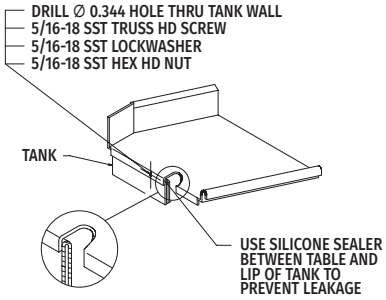

As continued product improvement is a policy of Hobart, specifications are subject to change without notice.

Commercial Kitchen Equipment Parts

Find more Hobart equipment resources at

parthubz.com/equipment/hobart

Need parts or service?

Call 833-700-8006

support@parthubz.com

parthubz.com