Commercial Kitchen Equipment Parts

HOBART AM16VL-BAS

Hobart AM16VL-BAS document

Provided by PartHubz

parthubz.com

833-700-8006 | support@parthubz.com

HOBART

Project _____

AIA # _____ SIS # _____

Item # _____ Quantity _____ C.S.I. Section 114000

COMMERCIAL DISHWASHERS

AM16 SERIES – AM16VL-BAS BASE ELECTRIC VENTLESS

AM16VL-BAS BASE ELECTRIC

High Temperature Ventless Door-Style Dishwashing Machine

SPECIFIER STATEMENT

Specified unit will be a Hobart AM16 Base electric high temperature ventless dishwashing machine. Features include 5-sided insulated hood, ventless operation & energy recovery, door lock, touch-screen controls with WiFi connectivity, NSF pot and pan rating for 2-, 4- & 6-minute cycles, 17" (432 mm) door opening, pumped drain, auto door start with auto fill, interchangeable stainless steel rinse arms and X-shaped wash arms, delime cycle, advanced diagnostics and service connection, up to 45 racks per hour, .67 U.S. gallons (2.5 L) per rack pumped final rinse.

1 year parts and labor warranty.

STANDARD FEATURES

+ .67 gallons (2.5 L) per rack pumped final rinse
+ 45 racks per hour – hot water sanitizing
+ Two stage filtration
+ Pillar less opening
+ 5-sided insulated hood
+ User-friendly smart touchscreen controls
+ Single point electrical connection standard, field convertible to dual point connection
+ 3 phase standard, field convertible to single phase
+ WiFi connectivity
+ SmartConnect app and cloud with machine status, temperature logs, error code reporting, and cost, consumption and usage analysis
+ Temperature and chemical lock outs with Hobart equipped chemical pumps
+ Pumped drain
+ Ventless operation & energy recovery
+ Door lock
+ Timed wash cycles for 1, 2, 4 or 6 minutes
+ NSF pot and pan rating for 2-, 4- & 6- minute cycles
+ Sense-A-Temp™ 70°F (39°C) rise electric booster heater
+ Self-draining, high efficiency wash pump with stainless steel impeller
+ 17" (432 mm) door opening
+ Stainless steel drawn tank, tank shelf, chamber, trim panels, frame and feet
+ Spring counterbalanced chamber with reinforced, thermo-plastic rollers
+ X- shaped revolving, interchangeable upper and lower anti-clogging wash arms
+ Revolving, interchangeable upper and lower rinse arms
+ Slanted, self-locating, one-piece scrap screen and basket system
+ Automatic fill
+ Door actuated start
+ AutoClean
+ Factory startup
+ Service diagnostics
+ Straight-through or corner installation
+ Delime cycle with notification (field activated)

OPTIONS & ACCESSORIES (Available at extra cost)

- ❑ Peg rack
- ❑ Combination rack
- ❑ Chemical pumps
- ❑ Drain water tempering kit
- ❑ Splash shield for corner installations
- ❑ Flanged and seismic feet
- ❑ Water hammer arrestor kit
- ❑ Rapid fill kit
- ❑ Sink integration kit
  - Sink saddle & 3" (76 mm) leg extension
  - Sink rail kit
  - Fold down table

Approved by _____ Date _____ Approved by _____ Date _____

AM16VL-BAS BASE ELECTRIC

High Temperature Ventless Door-Style Dishwashing Machine

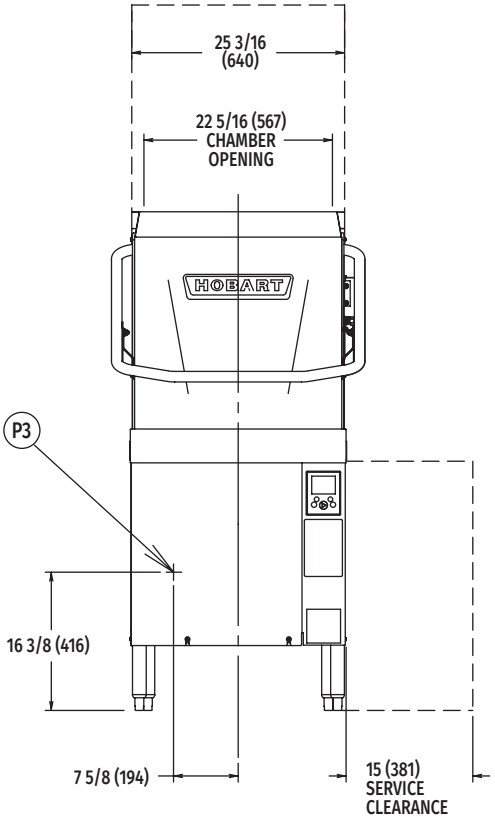

Front View

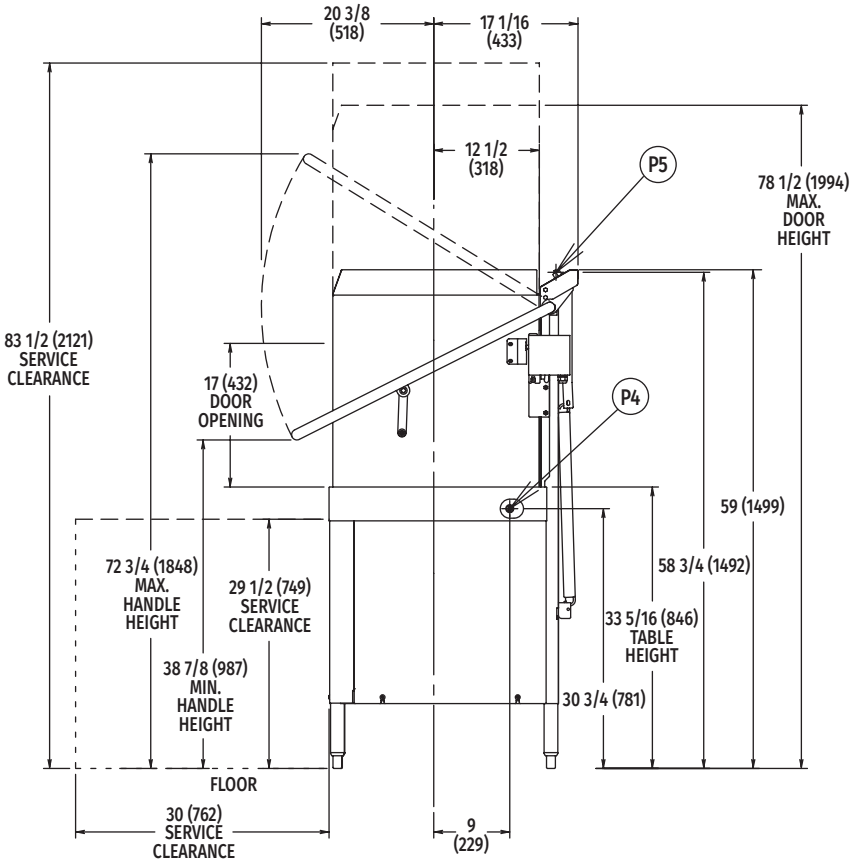

Right Side View

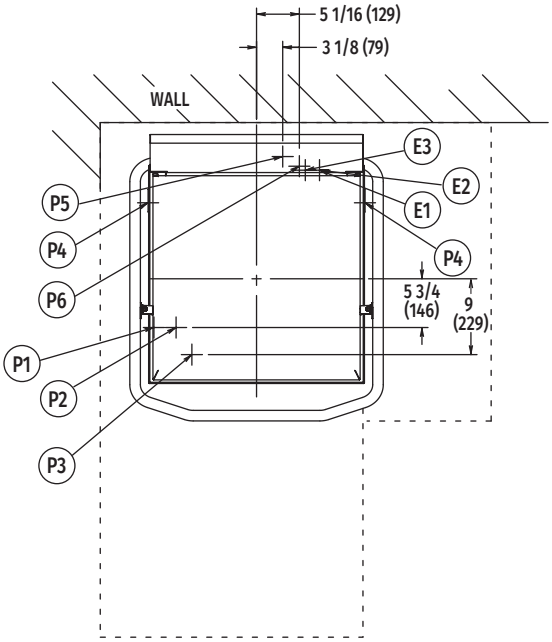

Top View

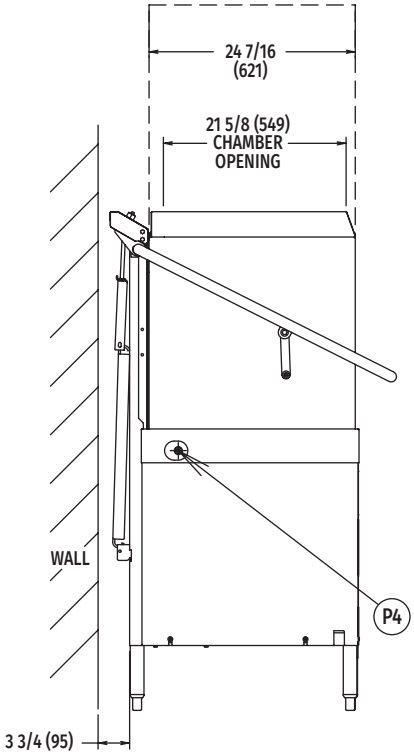

Left Side View

MODEL:
AM16VL-BAS
E-950440

CAD and/or Revit Files Available

AM16VL-BAS BASE ELECTRIC

High Temperature Ventless Door-Style Dishwashing Machine

WARNING: Electrical and grounding connections must comply with the applicable portion of the National Electrical Code and/or other local electrical codes.

Plumbing connections must comply with applicable sanitary, safety, and plumbing codes.

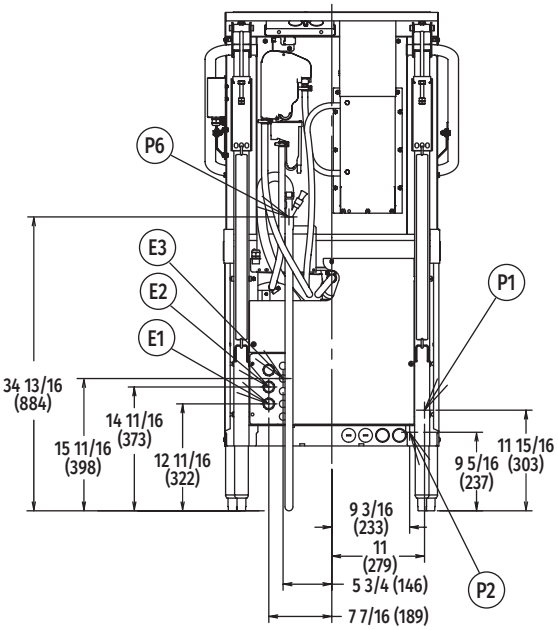

Rear View

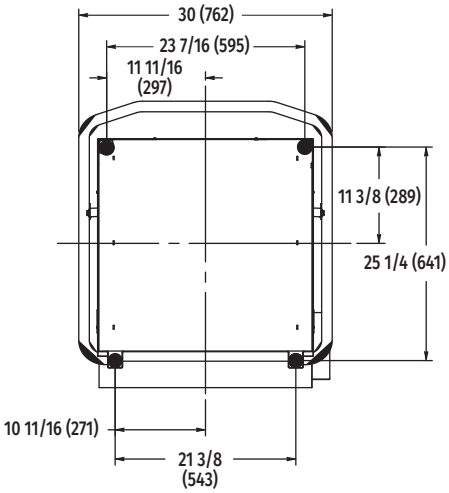

Bottom View

LEGEND

Electrical Connections	
E1	Electrical connection: wash pump motor & sump heater, 1" or 3/4" (25 or 19 mm) conduit hole; 12-11/16" (322 mm) AFF.
E2	Electrical connection: electric booster & controls only or single point electrical connection (3PH only), 1" or 3/4" (25 or 19 mm) conduit hole; 14-11/16" (373 mm) AFF.
E3	Electrical connection: detergent & rinse agent feeders, (DPS1 & DPS2) 1.5 amps @ nameplate supply voltage, (RPS1 & RPS2) 1.5 amps @ nameplate supply voltage; 1/2" (13 mm) conduit hole, 15-11/16" (398 mm) AFF.
Plumbing Connections	
P1	Common water connection including booster heater: 55°F (13°C) water minimum, 15-65 PSI (103-448 kPa) recommended; 3/4" (19 mm) female garden hose fitting on 6' (1829 mm) long hose supplied with machine; 11-15/16" (303 mm) AFF.
P2	Optional – hot water connection: 110°F (43C) water minimum (rapid fill accessory - when ordered); 3/4" (19 mm) female garden hose fitting on 6' (1829) long hose; 9-5/16" (237 mm) AFF.
P3	Detergent probe sensor: remove cap and stud assembly to access 7/8" (22 mm) hole; 16-3/8" (416 mm) AFF.
P4	Detergent feeder: two locations available. Remove cap and stud assembly to access 7/8" hole (22 mm); 30-3/4" (781 mm)AFF.
P5	Rinse agent feeder: remove 1/8" (3,2 mm) NPT pipe plug to access 1/8" (3,2 mm) NPT tapped hole; 67-5/8" (1718 mm) AFF.
P6	Drain connection: 5/8" (16 mm) barb fitting with 6' (1829 mm) long hose supplied with machine; 34-13/16" (884 mm) AFF. Maximum height 40" (1016) AFF.

SPECIFICATIONS

Capacities

Racks Per Hour (maximum) 45
Dishes per Hour (average 25 per rack) 1,125
Glasses per Hour (average 45 per rack) 2,025
Wash Tank (U.S. gallons/Liters) 10.5 (39,7)

Motor Horsepower (watts)

Rinse Pump 0.18 (134)
Wash Pump. 2 (1492)
Blower. 0.05 (37.3)
Drain Pump. 0.21 (157)

Rinse

Gallons (liters) per Rack. 0.67 (2,5)
Gallons (liters) per Hour (maximum consumption) 30.15 (114)

Peak Rate of Drain Flow

Gallons (liters) per Minute (initial rate with full tank) 18.5 (70)

Heating

Electric Booster (kW). 7.1
Electric Heating Unit (kW). 5.4

Shipping Weight (approximate) . . . . . 322 lbs. (146 kg)

Crated Dimensions . . . 65.125"H x 36.5"W x 36.5"L (1654 x 927 x 927 mm)

AM16VL-BAS BASE ELECTRIC

High Temperature Ventless Door-Style Dishwashing Machine

E1	AM16 with Electric Heat (When Field Converted to Dual Point)		
Voltage	Rated Amps	Minimum Supply Circuit Ampacity	Maximum Protective Device
208-240/60/1	39.6	50	50
208-240/60/3	26.9	30	30
480/60/3	10.5	15	15

E2	9.5 kW Booster & Controls Ampacity Ratings (When Field Converted to Dual Point)		
Voltage	Rated Amps	Minimum Supply Circuit Ampacity	Maximum Protective Device
208-240/60/1	43.3	50	50
208-240/60/3	26.6	30	30
480/60/3	13.4	15	15

E2	AM16 Single Point Electrical Service Connection as Shown Below		
Voltage	Rated Amps	Minimum Supply Circuit Ampacity	Maximum Protective Device
208-240/60/3	53.5	60	60
480/60/3	24.0	30	30

Approximate Heat Gain to Space without Vent Hood	
Type	BTU/Hr.
Latent	4,300
Sensible	3,500

Miscellaneous Notes: All dimensions taken from floor line may increase 7/8" (22 mm) or decrease 3/8" (9,5 mm) depending on leg adjustment.

Vent hood (if required) to provide a minimum 450 CFM (12.7 M^3) exhaust (ref installation instructions).

Net weight of machine including booster: 305 lbs (138 kg). Domestic shipping weight including booster: 325 lbs (147 kg).

Size of racks – 19¾" x 19¾" (502 x 502 mm).

Plumbing Notes: Water hammer arrestor (meeting ASSE-1010 standard or equivalent) to be supplied (by others) in common water supply line at service connection.

Recommended water hardness to be 3 grains or less for best results.

Recommended building flowing water pressure to the dishwasher at or above 20 PSI. Pressures lower than 20 PSI may affect machine fill/start-up times.

This is a pumped rinse machine. Pressure regulating valve is not necessary.

For convenience when cleaning, water tap should be installed near machine with heavy duty hose and squeeze valve.

AM16VL-BAS TABLING CONFIGURATIONS AND TRACK DESIGN

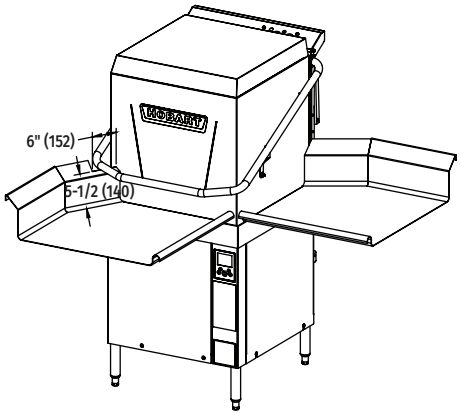

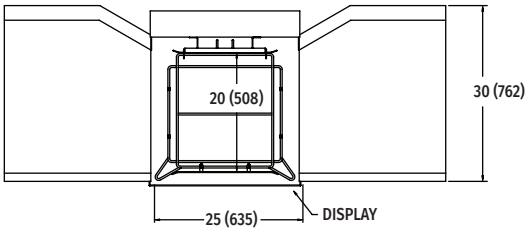

Pass Thru Installation

Top Inside View of Machine

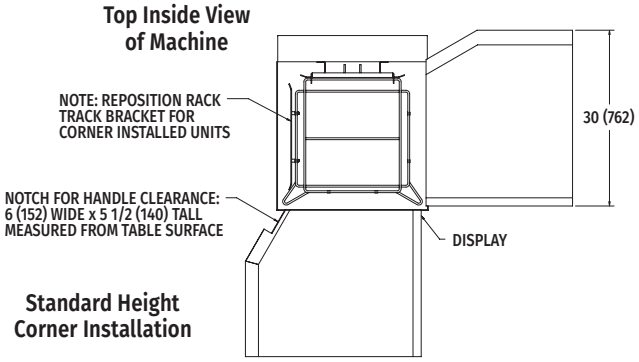

Standard Height Corner Installation

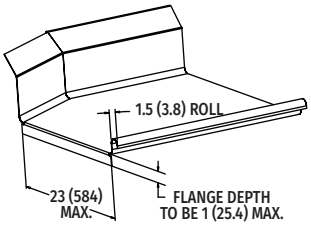

Suggested Table Design

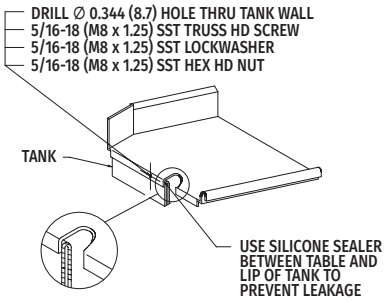

As continued product improvement is a policy of Hobart, specifications are subject to change without notice.

HOBART CANADA • 105 Gordon Baker rd, Suite 801, Toronto, ON M2H 3P8 • 1-800-334-2371 • www.hobart.ca

Commercial Kitchen Equipment Parts

Find more Hobart equipment resources at

parthubz.com/equipment/hobart

Need parts or service?

Call 833-700-8006

support@parthubz.com

parthubz.com