Commercial Kitchen Equipment Parts

HOBART AM16VL-BAS

Hobart AM16VL-BAS Specification Sheet

Provided by PartHubz

parthubz.com

833-700-8006 | support@parthubz.com

HOBART

Project _____

AIA # _____ SIS # _____

Item # _____ Quantity _____ C.S.I. Section 114000

COMMERCIAL DISHWASHERS

AM16 SERIES – AM16VL-BAS BASE ELECTRIC VENTLESS

AM16VL-BAS BASE ELECTRIC

High Temperature Ventless Door-Style Dishwashing Machine

SPECIFIER STATEMENT

Specified unit will be a Hobart AM16 Base electric high temperature ventless dishwashing machine. Features include 5-sided insulated hood, ventless operation & energy recovery, door lock, touch-screen controls with WiFi connectivity, NSF pot and pan rating for 2-, 4- & 6-minute cycles, 17" door opening, pumped drain, auto door start with auto fill, interchangeable stainless steel rinse arms and X-shaped wash arms, delime cycle, advanced diagnostics and service connection, up to 45 racks per hour, .67 U.S. gallons per rack pumped final rinse.

1 year parts and labor warranty.

STANDARD FEATURES

- .67 gallons per rack pumped final rinse
- 45 racks per hour – hot water sanitizing
- Two stage filtration
- Pillarless opening
- 5-sided insulated hood
- User-friendly smart touchscreen controls
- Single point electrical connection standard, field convertible to dual point connection
- 3 phase standard, field convertible to single phase
- WiFi connectivity
- SmartConnect app and cloud with machine status, temperature logs, error code reporting, and cost, consumption and usage analysis
- Temperature and chemical lock outs with Hobart equipped chemical pumps
- Pumped drain
- Ventless operation & energy recovery
- Door lock
- Timed wash cycles for 1, 2, 4 or 6 minutes
- NSF pot and pan rating for 2-, 4- & 6- minute cycles
- Sense-A-Temp™ 70°F rise electric booster heater
- Self-draining, high efficiency wash pump with stainless steel impeller
- 17" door opening
- Stainless steel drawn tank, tank shelf, chamber, trim panels, frame and feet
- Spring counterbalanced chamber with reinforced, thermo-plastic rollers
- X- shaped revolving, interchangeable upper and lower anticlogging wash arms
- Revolving, interchangeable upper and lower rinse arms
- Slanted, self-locating, one-piece scrap screen and basket system
- Automatic fill
- Door actuated start
- AutoClean
- Factory startup
- Service diagnostics
- Straight-through or corner installation
- Delime cycle with notification (field activated)

OPTIONS & ACCESSORIES (Available at extra cost)

- ❑ Peg, combination and wine rack
- ❑ Chemical pumps
- ❑ Drain water tempering kit
- ❑ Splash shield for corner installations
- ❑ Flanged and seismic feet
- ❑ Water hammer arrestor kit
- ❑ Rapid fill kit
- ❑ Prison package
- ❑ Marine package
- ❑ Pumped drain air gap kit

Approved by _____ Date _____ Approved by _____ Date _____

AM16VL-BAS BASE ELECTRIC

High Temperature Ventless Door-Style Dishwashing Machine

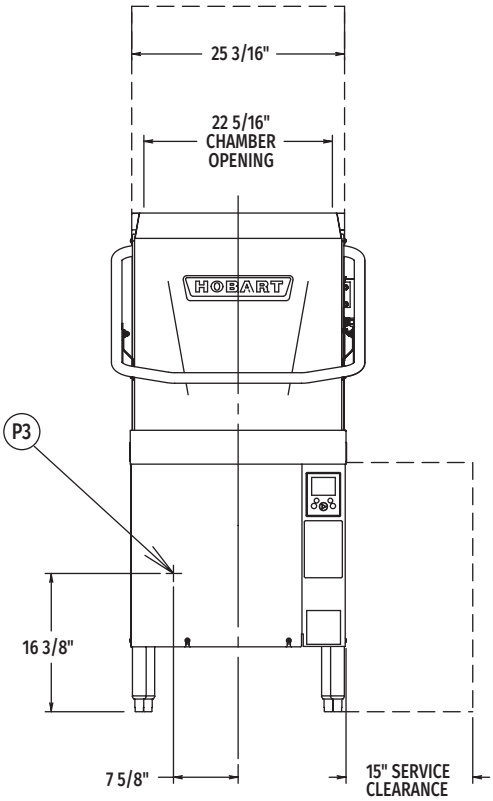

Front View

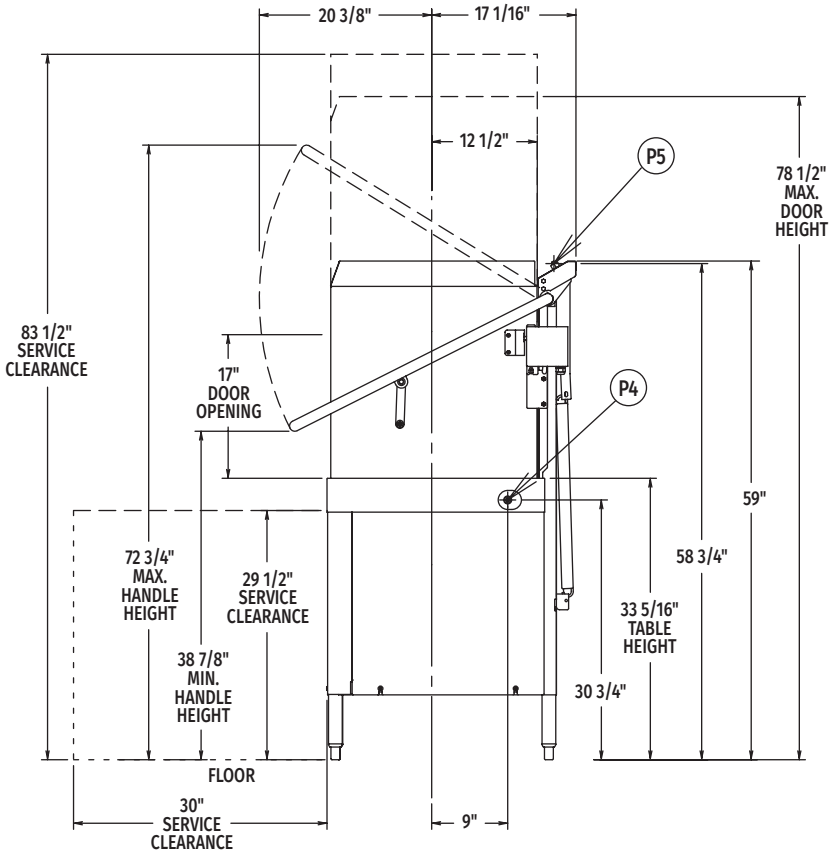

Right Side View

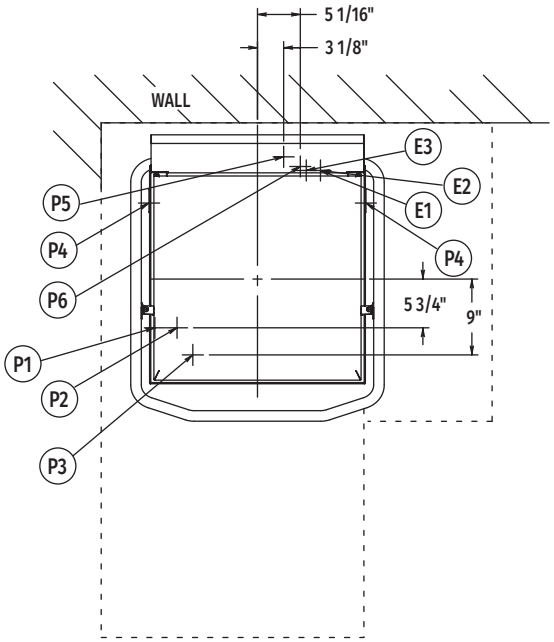

Top View

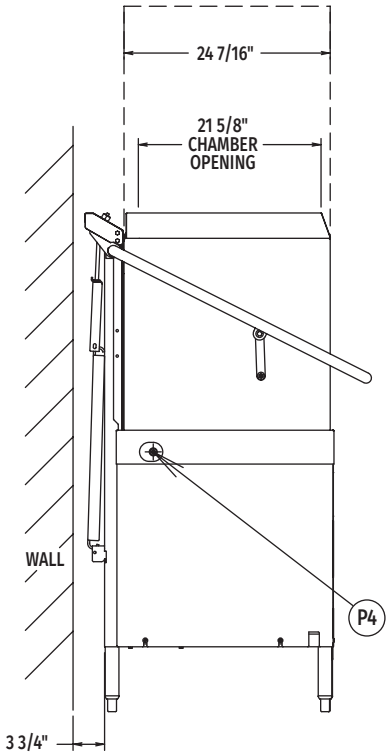

Left Side View

MODEL:
AM16VL-BAS
E-950440

CAD and/or Revit Files Available

AM16VL-BAS BASE ELECTRIC

High Temperature Ventless Door-Style Dishwashing Machine

WARNING: Electrical and grounding connections must comply with the applicable portion of the National Electrical Code and/or other local electrical codes.

Plumbing connections must comply with applicable sanitary, safety, and plumbing codes.

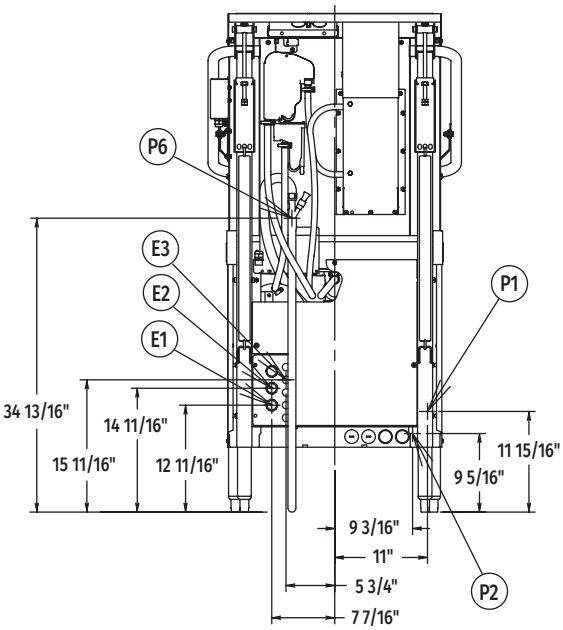

Rear View

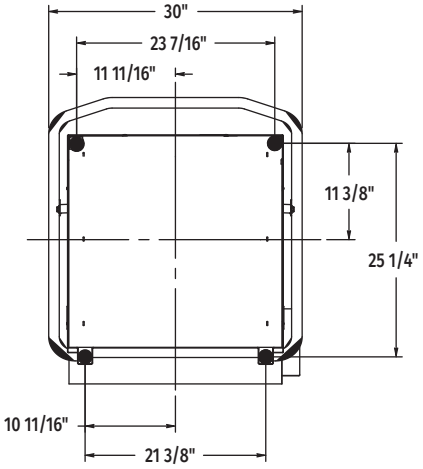

Bottom View

LEGEND

Electrical Connections	
E1	Electrical connection: wash pump motor & sump heater, 1" or 3/4" conduit hole; 12-11/16" AFF.
E2	Electrical connection: electric booster & controls only or single point electrical connection (3PH only), 1" or 3/4" conduit hole; 14-11/16" AFF.
E3	Electrical connection: detergent & rinse agent feeders, (DPS1 & DPS2) 1.5 amps @ nameplate supply voltage, (RPS1 & RPS2) 1.5 amps @ nameplate supply voltage; 1/2" conduit hole, 15-11/16" AFF.
Plumbing Connections	
P1	Common water connection including booster heater: 55°F water minimum, 15-65 PSI recommended; 3/4" female garden hose fitting on 6' long hose supplied with machine; 11-15/16" AFF.
P2	Optional – hot water connection: 110°F water minimum (rapid fill accessory - when ordered); 3/4" female garden hose fitting on 6' long hose; 9-5/16" AFF.
P3	Detergent probe sensor: remove cap and stud assembly to access 7/8" hole; 16-3/8" AFF.
P4	Detergent feeder: two locations available, remove cap and stud assembly to access 7/8" hole; 30-3/4" AFF.
P5	Rinse agent feeder: remove 1/8" NPT pipe plug to access 1/8" NPT tapped hole; 67-5/8" AFF.
P6	Drain connection: 5/8" barb fitting with 6' long hose supplied with machine; 34-13/16" AFF. Maximum height 40" AFF.

SPECIFICATIONS

Capacities

- Racks Per Hour (maximum) 45
- Dishes per Hour (average 25 per rack) 1,125
- Glasses per Hour (average 45 per rack) 2,025
- Wash Tank (U.S. gallons) 10.5

Motor Horsepower

- Rinse Pump 0.18
- Wash Pump 2
- Blower 0.05
- Drain Pump 0.21

Rinse

- Gallons per Rack 0.67
- Gallons per Hour (maximum consumption) 30.15

Peak Rate of Drain Flow

- Gallons per Minute (initial rate with full tank) 18.5

Heating

- Electric Booster (kW) 7.1
- Electric Heating Unit (kW) 5.4

Shipping Weight (approximate) . . . . . 322 lbs.

Crated Dimensions . . . . . 65.125"H x 36.5"W x 36.5"L

AM16VL-BAS BASE ELECTRIC

High Temperature Ventless Door-Style Dishwashing Machine

E1	AM16 with Electric Heat (When Field Converted to Dual Point)		
Voltage	Rated Amps	Minimum Supply Circuit Ampacity	Maximum Protective Device
208-240/60/1	39.6	50	50
208-240/60/3	26.9	30	30
480/60/3	10.5	15	15

E2	Booster & Controls Ampacity Ratings (When Field Converted to Dual Point)		
Voltage	Rated Amps	Minimum Supply Circuit Ampacity	Maximum Protective Device
208-240/60/1	43.3	50	50
208-240/60/3	26.6	30	30
480/60/3	13.4	15	15

E2	AM16 Single Point Electrical Service Connection as Shown Below		
Voltage	Rated Amps	Minimum Supply Circuit Ampacity	Maximum Protective Device
208-240/60/3	53.5	60	60
480/60/3	24.0	30	30

Approximate Heat Gain to Space without Vent Hood	
Type	BTU/Hr.
Latent	4,300
Sensible	3,500

Miscellaneous Notes: All dimensions taken from floor line may increase 7/8" or decrease 3/8" depending on leg adjustment.

Vent hood (if required) to provide a minimum of 450 CFM exhaust (ref installation instructions).

Net weight of machine including booster: 305 lbs.
Domestic shipping weight including booster: 325 lbs.

Size of racks – 19¾" x 19¾".

Plumbing Notes: Water hammer arrestor (meeting ASSE-1010 standard or equivalent) to be supplied (by others) in common water supply line at service connection.

Recommended water hardness to be 3 grains or less for best results.

Note: Electric heating unit & booster (kW) calculated at 208V.

Recommended building flowing water pressure to the dishwasher at or above 20 PSI. Pressures lower than 20 PSI may affect machine fill/start-up times.

This is a pumped rinse machine. Pressure regulating valve is not necessary.

For convenience when cleaning, water tap should be installed near machine with heavy duty hose and squeeze valve.

AM16VL-BAS TABLING CONFIGURATIONS AND TRACK DESIGN

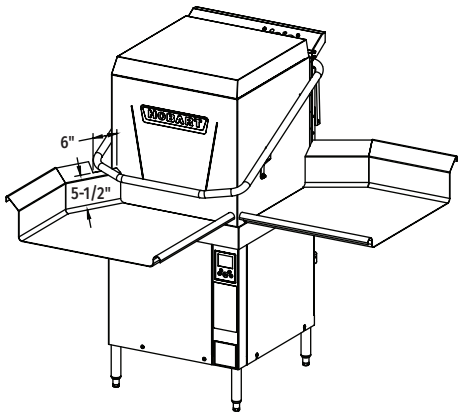

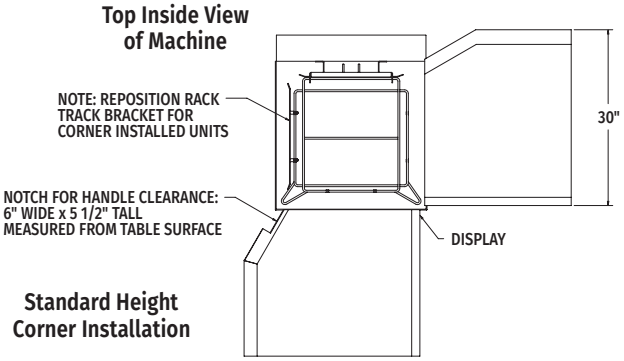

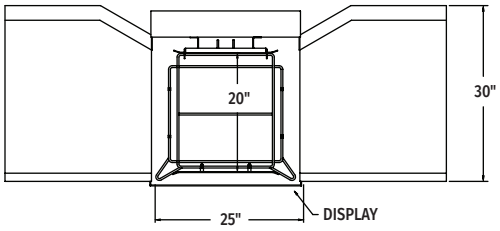

Pass Thru Installation

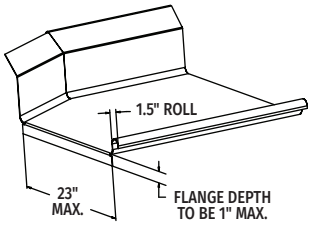

Suggested Table Design

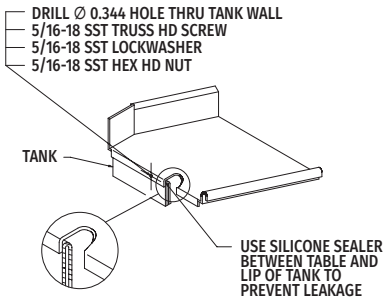

As continued product improvement is a policy of Hobart, specifications are subject to change without notice.

Commercial Kitchen Equipment Parts

Find more Hobart equipment resources at

parthubz.com/equipment/hobart

Need parts or service?

Call 833-700-8006

support@parthubz.com

parthubz.com