Commercial Kitchen Equipment Parts

HOBART CLPS76EN-BAS

Hobart CLPS76eN-BAS document

Provided by PartHubz

parthubz.com

833-700-8006 | support@parthubz.com

Item # _____

Quantity _____

C.S.I. Section 11400

HOBART
701 S Ridge Avenue, Troy, OH 45374
1-888-4HOBART • www.hobartcorp.com

CLPS76*e*N-BAS DISHWASHER

STANDARD FEATURES

- 245 racks per hour
- Opti-RinSe™ system
- Rapid return conveyor drive mechanism
- Insulated hinged double doors with door interlock switches
- 19.5 inch chamber height opening
- Top mounted micro-processer control module
- Energy saver mode
- Dirty water indicator
- Low temperature alert
- NSF rated configurable Pot and Pan dwell mode
- Configurable "intelligent" delime alert, determined by water hardness at installation
- Service diagnostics
- NAFEM Data Protocol compliant
- Computational fluid dynamic designed self-aligning wash manifolds
- Stainless steel debossed anti-clogging wash arms
- Removable integrated pump intake screen
- Stainless steel self-draining pumps and impellers
- Single, sloping scrap screen and deep basket
- Stainless panels enclose perimeter and bottom
- Door actuated drain closure
- Single point electrical connection (three phase only), does not include the booster heater
- Convertible hot water or low temp final rinse
- Vent fan and booster heater control

DIRECTION OF OPERATION

- ❑ Right to Left
- ❑ Left to Right

VOLTAGE

- ❑ 208/60/1
- ❑ 208/60/3
- ❑ 240/60/1
- ❑ 240/60/3
- ❑ 380/60/3
- ❑ 480/60/3
- ❑ 600/60/3

MODEL

- ❑ CLPS76*e*N-BAS – Dishwasher

OPTIONS AT EXTRA COST

- ❑ Stainless steel pressure-less 15/30 KW booster heater
- ❑ Higher than standard chamber

ACCESSORIES

- ❑ Stainless steel vent hoods
- ❑ Direct drive unloader
- ❑ Side loader
- ❑ Blower-dryer
- ❑ Drain water tempering kit (Drain water tempering kit comes standard on the DWER or advansys models)
- ❑ Flanged feet kit (requires three kits)

Specifications, Details and Dimensions on Inside and Back.

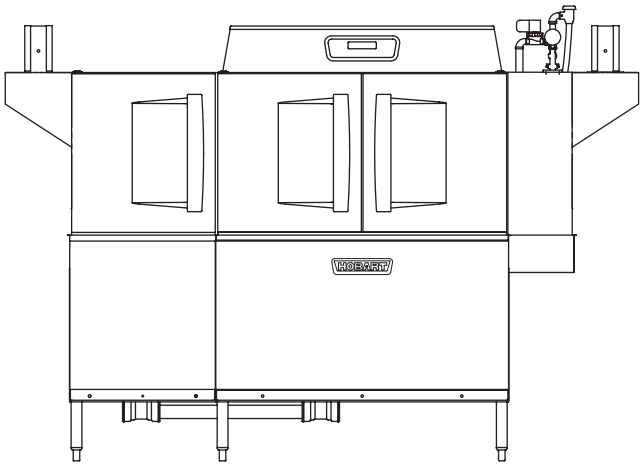

Shown with optional vent hoods

HOBART

CLPS76*e*N-BAS DISHWASHER

CLPS76*e*N-BAS DISHWASHER

HOBART
701 S Ridge Avenue, Troy, OH 45374
1-888-4HOBART • www.hobartcorp.com

THE CL*e*N SERIES WAREWASHER IS NOW STANDARD WITH MORE EFFICIENT FEATURES THAN EVER . . .

Inside and out the CL*e*N warewashers by Hobart are packed with standard components and patented design innovations that make them the biggest value in the dishwasher industry.

The insulated hinged inspection doors provide easy access in the chamber. Exterior wash pipes and reduced interior baffles reduce clean-up time. The Rapid Return drive allows for a wide separation between the wash and the rinse zone.

New, Improved Control Module. The Hobart exclusive microprocessor control module offers a choice of many features, such as an exclusive Energy Saver Mode, NSF rated configurable Pot and Pan dwell mode, Low Temperature Alerts and Dirty Water Indicator. It also displays pertinent machine status and has a configurable "intelligent" delime notification. The controls have built-in Service Diagnostics and are NAFEM Data Protocol Compliant.

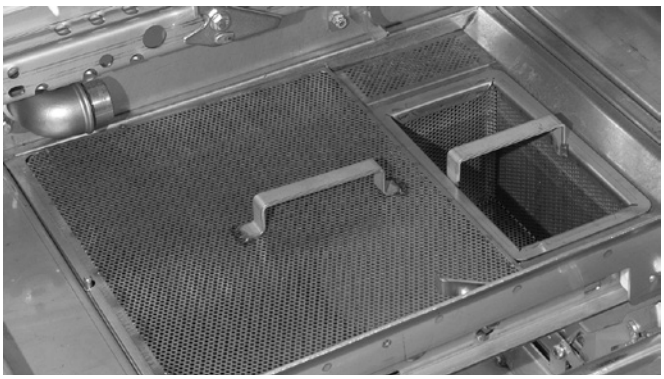

Soil Management System. Screen design sheds soil more easily than flat screens, reduces frequency of cleaning — easy to empty large soil particles . . . Just lift out the scrap basket.

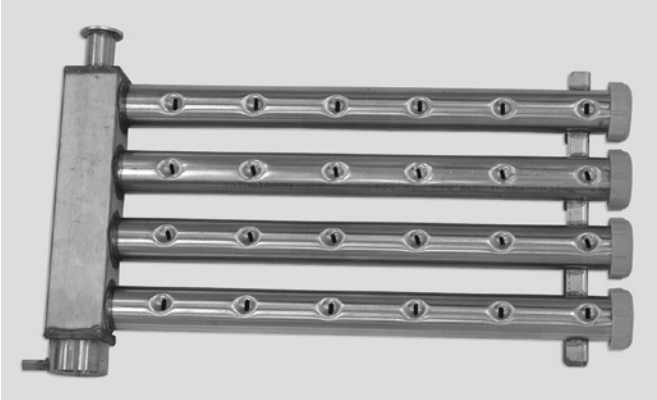

Wash Manifolds. Computational Fluid Dynamic designed wash manifolds are self-aligning and come with Hobart's signature debossed anti-clogging nozzles for superior result.

Opti-RinSe™. Hobart's exclusive Opti-RinSe™ significantly reduces operating cost by reducing rinse water and the energy required to heat the water. The unique spray pattern uses large droplets to more efficiently sanitize the ware.

OTHER STANDARD FEATURES . . .

- **Thermal Layer Curtains** help keep the heat inside the machine.
- **Ball Detent Clutch Conveyor Drive** for maximum protection against conveyor jams
- **Integrated Removable Pump Intake Screen** to offer the ultimate guard of keeping debris from entering the pump.
- **Hinged Door Seals** and stainless steel labyrinth seal for drip-free operation
- **Low-Temp Convertibility In Field.** All machines shipped hot. Change software in field at set up to low temperature if desired – then, if requirements change, convert from one mode to the other in the field. An exclusive feature – standard from Hobart.
- **Door Actuated Drain Closure.** Closing the door automatically actuates drain closure, eliminates extra manual steps, ensures that closure is in the correct position.

HOBART
701 S Ridge Avenue, Troy, OH 45374
1-888-4HOBART • www.hobartcorp.com

CLPS76*e*N-BAS DISHWASHER

AVAILABLE OPTIONS AND ACCESSORIES . . .

Flexibility is synonymous with Hobart CL*e*N dishwashers. If your operation demands a dishwasher with a vent hood, an extended hood . . . a power scrapper, just specify the combination of options that suit your needs.

Built-in Pressureless Stainless Steel Booster Heater. Interwired and interplumbed. Saves on installation and saves floor space. Simplifies operation with just one switch to power dishmachine and booster.

Side Loader. Save up to 20 square feet in the dishroom layout with an optional C-Line Side Loader. Racks are indexed 90° into the dishwasher automatically – a feature that cuts space and reduces labor dramatically. Your dishroom team will appreciate this feature.

OTHER AVAILABLE ACCESSORIES . . .

Blower-dryer, steam booster heater, and a single-point electrical connection to include electric booster heater.

	CLPS76*e*N
Machine Ratings (Mechanical) Racks per hour (19¾" x 19¾")	245
Conveyor Speed - feet per minute	6.8 max.
Dishes per Hour (Average 25 per rack)	6,100
Glasses per Hour (Average 45 per rack)	10,980
Floor Space – Table to Table (Inches)	76
Overall Dimensions – H x W x D (Inches)	68½ x 76½ x 31¼
Motor H.P.	Power Scrapper 2 Wash 2
Conveyor Drive H.P.	⅙
Number of Tanks	2
Tank Capacity – Gallons	Power Scrapper 23 Wash 23
Pump Capacity – Gallons per Minute - Weir Test	165
Heating Equipment – (For keeping power wash hot) Gas Burners (with Natural Gas)	78,000 BTU per hr.
Electric Heating Unit – Size Used	15 KW
Optional Booster Heater / Final Rinse	15 KW / 30 KW
Rinse – Minutes operated during hour of maximum operation	60
Final Rinse Flow – Gals. per min. At 15 PSI Flow Pressure	1.98
At 20 PSI Flow Pressure	2.30
Final Rinse Flow – Gals. per hr. – MAXIMUM At 15 PSI Flow Pressure	119
At 20 PSI Flow Pressure	138
Rinse 20 PSI Flow Pressure Gal./Rack	Hot Water Sanitizing - Chemical Sanitizing .56 - 180°F – .56 - 120°F
Steam Consumption – Pounds per hr. - MAXIMUM Approx. 30 lbs. per hr. = 1 boiler H.P. (BHP) **Dishwasher,** based on 20 PSI steam and on customer supplying final rinse water at 180°F maximum	65
Steam Booster, if used on 20 PSI steam - 20 PSI water flowing - 130°F entering water raised to 180°F min.	60
Exhaust Requirements – Cubic Feet per minute — Entrance End	200
Discharge End	400
Peak Rate of Drain Flow – Gallons per minute. (Initial rate with full tank)	38
Shipping Weight Crated – Approximate lbs.	613

CLPS76*e*N-BAS DISHWASHER

HOBART
701 S Ridge Avenue, Troy, OH 45374
1-888-4HOBART • www.hobartcorp.com

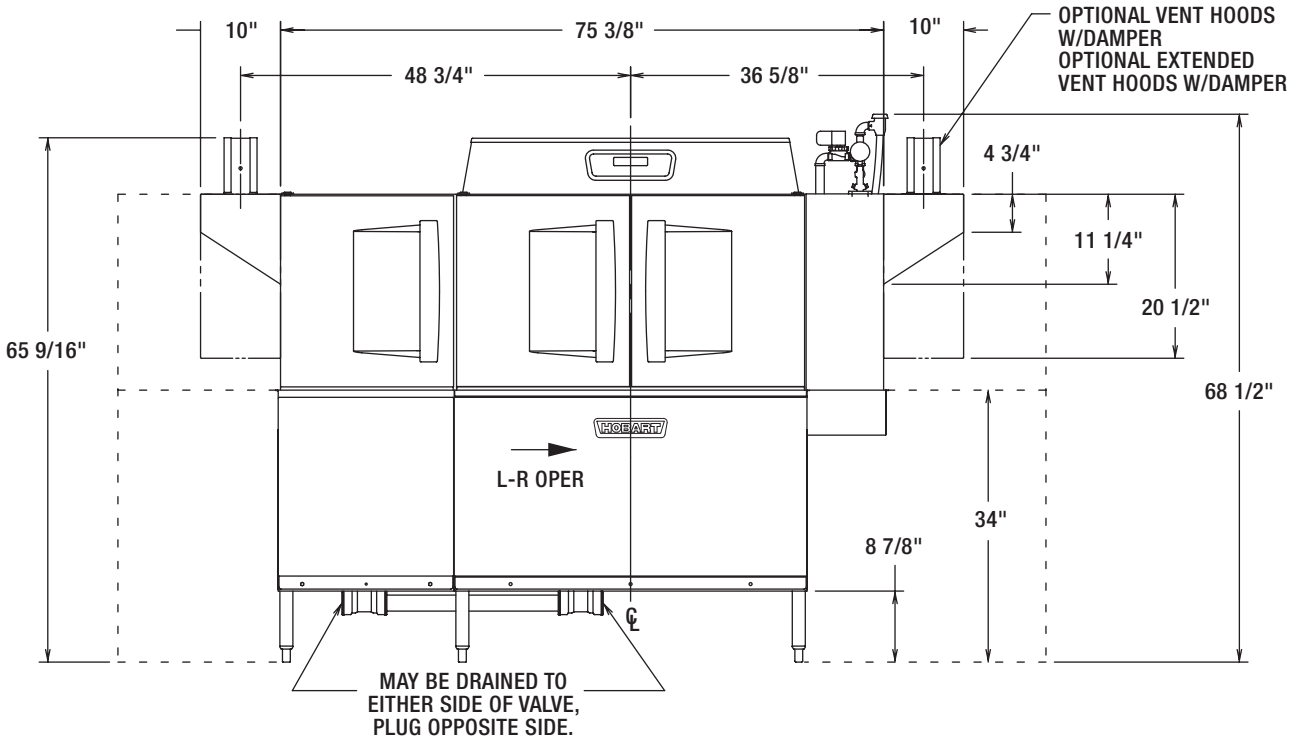

BOOSTER HEAT 15 KW			
ELEC. SPECS.	RATED AMPS	MINIMUM SUPPLY CIRCUIT CONDUCTOR AMPACITY	MAXIMUM PROTECTIVE DEVICE
200-240/50/3	40.1	50	50
380-415/50/3	26.6	30	30
200/50/3	43.3	60	60
208-240/60/3	40.1	50	50
208/60/3	45.0	60	60
240/60/3	40.1	50	50
380/60/3	21.3	30	30
380-415/60/3	23.2	30	30
480/60/3	20.0	25	25
600/60/3	13.5	20	20

BOOSTER HEAT 30 KW			
ELEC. SPECS.	RATED AMPS	MINIMUM SUPPLY CIRCUIT CONDUCTOR AMPACITY	MAXIMUM PROTECTIVE DEVICE
200-240/50/3	80.2	90	90
380-415/50/3	53.2	60	60
200/50/3	80.8	90	90
208-240/60/3	80.2	90	90
208/60/3	83.9	90	90
240/60/3	80.2	90	90
380/60/3	42.5	60	60
380-415/60/3	46.4	60	60
480/60/3	40.1	50	50
600/60/3	33.7	40	40

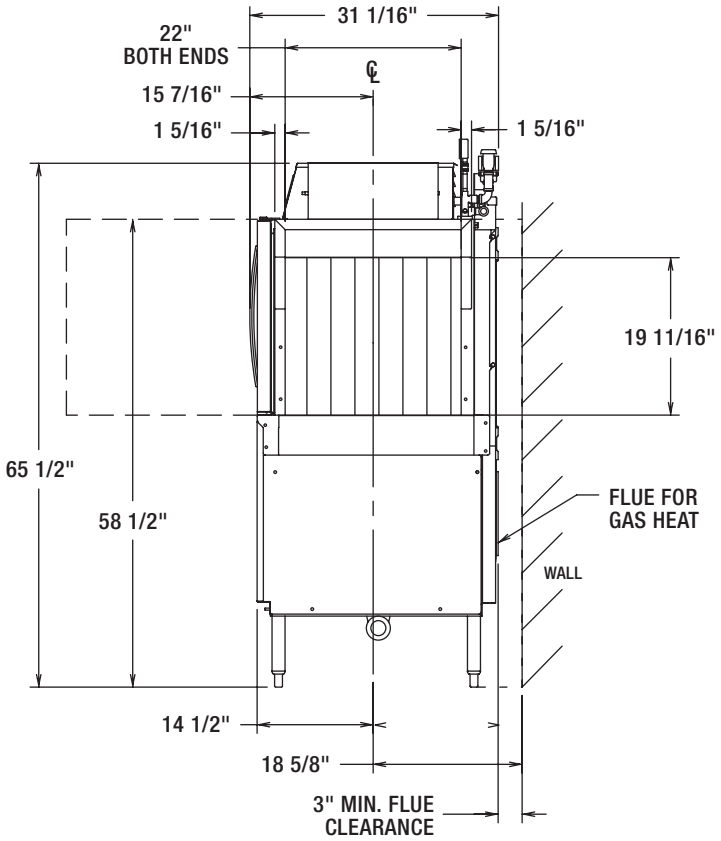

HOBART
701 S Ridge Avenue, Troy, OH 45374
1-888-4HOBART • www.hobartcorp.com

CLPS76*e*N-BAS DISHWASHER

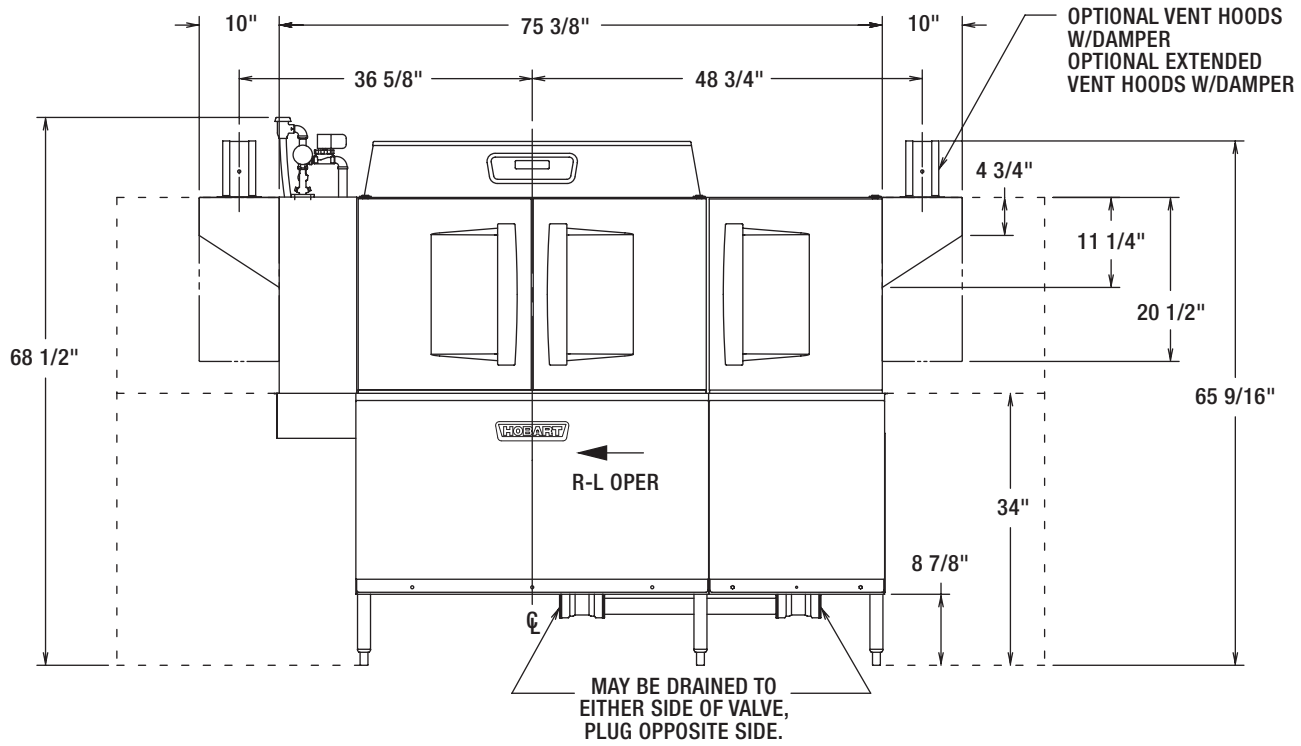

WARNING

ELECTRICAL AND GROUNDING CONNECTIONS MUST COMPLY WITH THE APPLICABLE PORTIONS OF THE NATIONAL ELECTRICAL CODE AND/OR OTHER LOCAL ELECTRICAL CODES.

CAUTION: CERTAIN MATERIALS INCLUDING SILVER, ALUMINUM, AND PEWTER ARE ATTACKED BY SODIUM HYPOCHLORITE (LIQUID BLEACH).

ATTN: PLUMBING CONNECTIONS MUST COMPLY WITH APPLICABLE SANITARY, SAFETY, AND PLUMBING CODES.

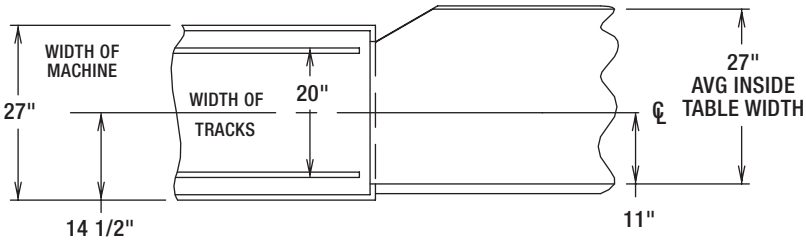

SUGGESTED TRACK AND TABLE LAYOUT

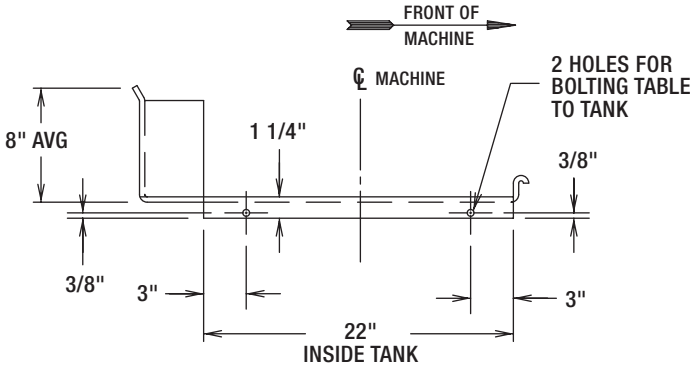

VIEW SHOWING HOLE LOCATIONS IN TURNED DOWN PORTION OF TABLE

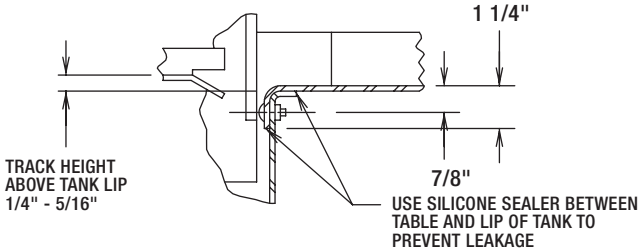

SECTIONAL VIEW SHOWING TABLE CONNECTIONS

CLPS76*e*N-BAS
ELECTRIC L-R

HOBART
701 S Ridge Avenue, Troy, OH 45374
1-888-4HOBART • www.hobartcorp.com

MODEL:
CLPS76*e*N BASE
L-R OPERATION
D-974809
REV B

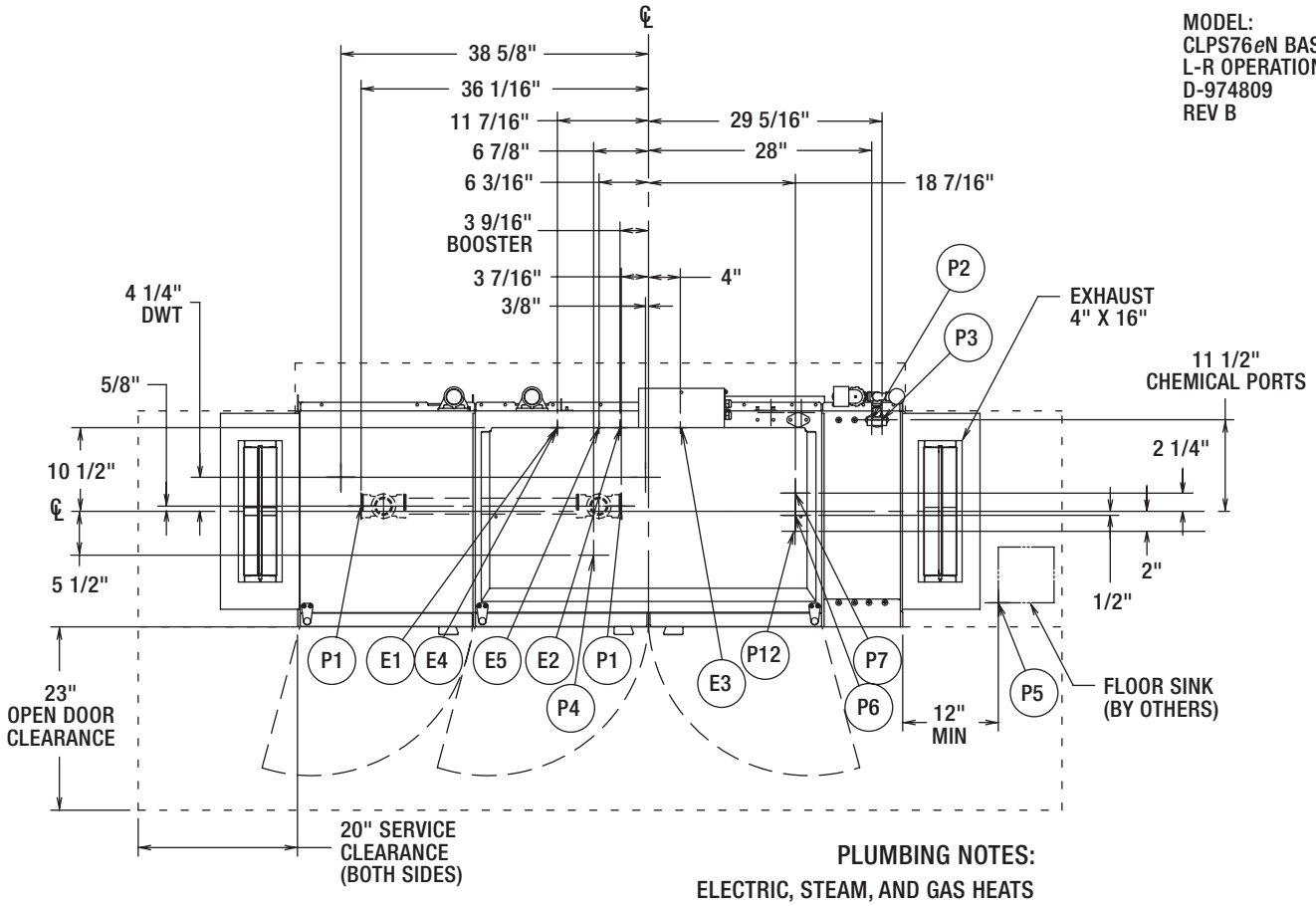

PLUMBING NOTES:

ELECTRIC, STEAM, AND GAS HEATS

WATER HAMMER ARRESTOR (MEETING ASSE-1010 STANDARD OR EQUIVALENT) TO BE SUPPLIED (BY OTHERS) IN COMMON WATER SUPPLY LINE AT SERVICE CONNECTION.

RECOMMENDED WATER HARDNESS TO BE 3 GRAINS OR LESS FOR BEST RESULTS.

FOR NON-BOOSTER MACHINE (P6 CONN): RECOMMENDED BUILDING FLOWING WATER PRESSURE TO THE DISHWASHER IS 20 PSI, (15 PSI MIN - 25 PSI MAX). IF PRESSURES HIGHER THAN 25 PSI ARE PRESENT, A PRESSURE REGULATING VALVE WITH INTERNAL THERMAL EXPANSION BY-PASS MUST BE SUPPLIED (BY OTHERS) IN THE WATER LINE TO THE DISHWASHER.

FOR CONVENIENCE WHEN CLEANING, WATER TAP SHOULD BE INSTALLED NEAR MACHINE WITH HEAVY DUTY HOSE AND SQUEEZE VALVE.

WHEN USED, CHEMICAL SANITIZING FEEDER MUST BE CERTIFIED TO NSF STANDARD 29.

MISCELLANEOUS NOTES:

OPTIONAL VENT HOODS OR EXTENDED HOODS EXHAUST REQUIREMENTS: 200 CFM ENTRANCE END
400 CFM EXIT END.

ALL DIMENSIONS TAKEN FROM FLOOR LINE MAY BE INCREASED APPROXIMATELY 3/4" OR DECREASED 1/2".

75-7/8" INSIDE TANK (AT TABLE CONNECTION)
75-21/32" TABLE TO TABLE.

NET WEIGHT OF MACHINE: 820 LBS (STD HEIGHT), DOMESTIC SHIPPING WEIGHT: 926 LBS (STD HEIGHT).

CLeN LATENT AND SENSIBLE HEAT DISSIPATION INFORMATION ON F40459.

SINGLE POINT ELECTRICAL CONNECTION (3 PH ONLY) MOTORS AND ELECTRIC TANK HEAT

VOLTAGE	RATED AMPS	MINIMUM SUPPLY CIRCUIT CONDUCTOR AMPACITY	MAXIMUM PROTECTIVE DEVICE
208/60/3	60.6	80	80
240/60/3	58	80	80
480/60/3	30.6	40	40
200/50/3	60	80	80
380/60/3	33.5	40	40
380-415/50/3	34.9	40	40
600/60/3	22.6	35	35

SEPARATE SERVICE CONNECTION FOR ELEC. HEAT

ELEC. HEAT 15 KW (WASH)			
VOLTAGE	RATED AMPS	MINIMUM SUPPLY CIRCUIT CONDUCTOR AMPACITY	MAXIMUM PROTECTIVE DEVICE
208/60/3	45	60	60
240/60/3	43	60	60
480/60/3	22	30	30
200/50/3	43	60	60
380/60/3	23	30	30
380-415/50/3	29	40	40
600/60/3	14.4	20	20
208/60/1	78	100	100
240/60/1	74.4	100	100

SEPARATE SERVICE CONNECTION FOR MOTORS ON ELEC. HEAT

MOTORS: 1/6 HP CONVEYOR 2 HP WASH			
VOLTAGE	RATED AMPS	MINIMUM SUPPLY CIRCUIT CONDUCTOR AMPACITY	MAXIMUM PROTECTIVE DEVICE
208/60/3	15.6	20	20
240/60/3	15.1	20	20
480/60/3	9.1	15	15
200/50/3	16.6	20	20
380/60/3	10.7	15	15
380-415/50/3	10.1	15	15
600/60/3	8.2	15	15
208/60/1	27	35	35
240/60/1	26.3	35	35

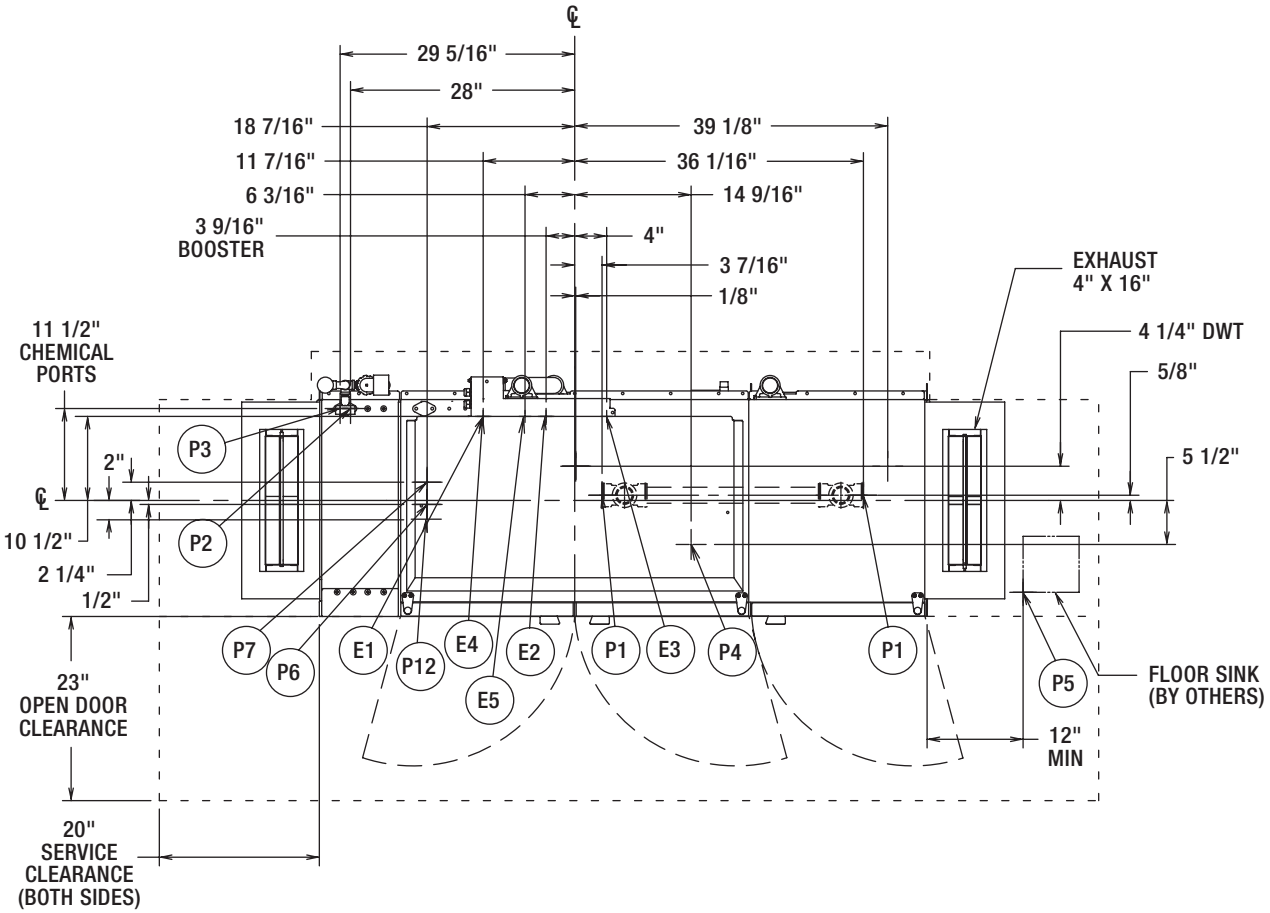

ELECTRICAL CONNECTIONS

CONNECTION INFORMATION
(AFF = ABOVE FINISHED FLOOR)

LEGEND

ELECTRIC, STEAM, AND GAS HEATS

E1 ELECTRIC CONNECTION: SINGLE POINT, ELEC, GAS, & STEAM, 1-1/4" CONDUIT HOLE OR 2" CONDUIT, 63-3/4" AFF

E2 ELECTRIC CONNECTION: BOOSTER. 15KW/30KW, 1-1/4" CONDUIT HOLE OR 2" CONDUIT HOLE, 63-3/4" AFF

E3 ELECTRIC CONNECTION: DETERGENT, SANITIZER (LOW TEMP ONLY) AND RINSE FEEDERS. 1/2" CONDUIT. 64-1/4" AFF

ELECTRIC HEAT ONLY

SINGLE PHASE OR FIELD CONFIGURED 3 PHASE SEPARATE ELECTRIC CONNECTION

E4 ELECTRIC CONNECTION: MOTORS AND CONTROLS 1-1/4" CONDUIT. 63-3/4" AFF.

E5 ELECTRIC HEAT: 15,000 WATTS, WASH TANK. 1" CONDUIT HOLE, 63-3/4" AFF.

PLUMBING CONNECTIONS

CONNECTION INFORMATION
(AFF = ABOVE FINISHED FLOOR)

LEGEND

ELECTRIC, STEAM, AND GAS HEATS

P1 DRAIN: 2" FPT, 7-3/8" AFF TWO POSSIBLE CONNECTIONS; MAY BE DRAINED TO EITHER SIDE OF VALVE, PLUG OPPOSITE SIDE.

P2 SANITIZER FEEDER: REMOVE 1/8" NPT PIPE PLUG TO ACCESS TAPPED HOLE. 1/8" NPT 59-1/2" AFF (LOW TEMP ONLY)

P3 RINSE FEEDER: REMOVE 1/8" NPT PIPE PLUG TO ACCESS TAPPED HOLE. 1/8" NPT 59-9/16" AFF.

P4 DETERGENT PROBE SENSOR: REMOVE CAP AND STUD ASSEMBLY TO ACCESS 7/8" DIA HOLE (WASH TANK ONLY). 14-5/8" AFF.

P5 INDIRECT DRAIN-FLOOR SINK: BY OTHERS, 0" AFF. WHEN REQUIRED, INSTALL FLOOR SINK OUTSIDE THE PERIMETER OF THE DISHWASHER.

P6 COMMON WATER CONNECTION: 1/2" FPT, 11-3/16" AFF.
HIGH TEMP. W/O BOOSTER 180°F MIN. 194°F MAX.
LOW TEMP. 120°F MIN.

P7 COMMON WATER CONNECTION: 1/2" FPT, 11-3/16" AFF.
HIGH TEMP. W/15K BOOSTER 140°F MIN.
HIGH TEMP. W/30K BOOSTER 110°F MIN.

OPTIONAL DRAIN WATER TEMPERING

P12 COLD WATER CONNECTION: 1/2" FPT, COLD TEMP 80°F MAX 7-3/8" AFF.

HOBART
701 S Ridge Avenue, Troy, OH 45374
1-888-4HOBART • www.hobartcorp.com

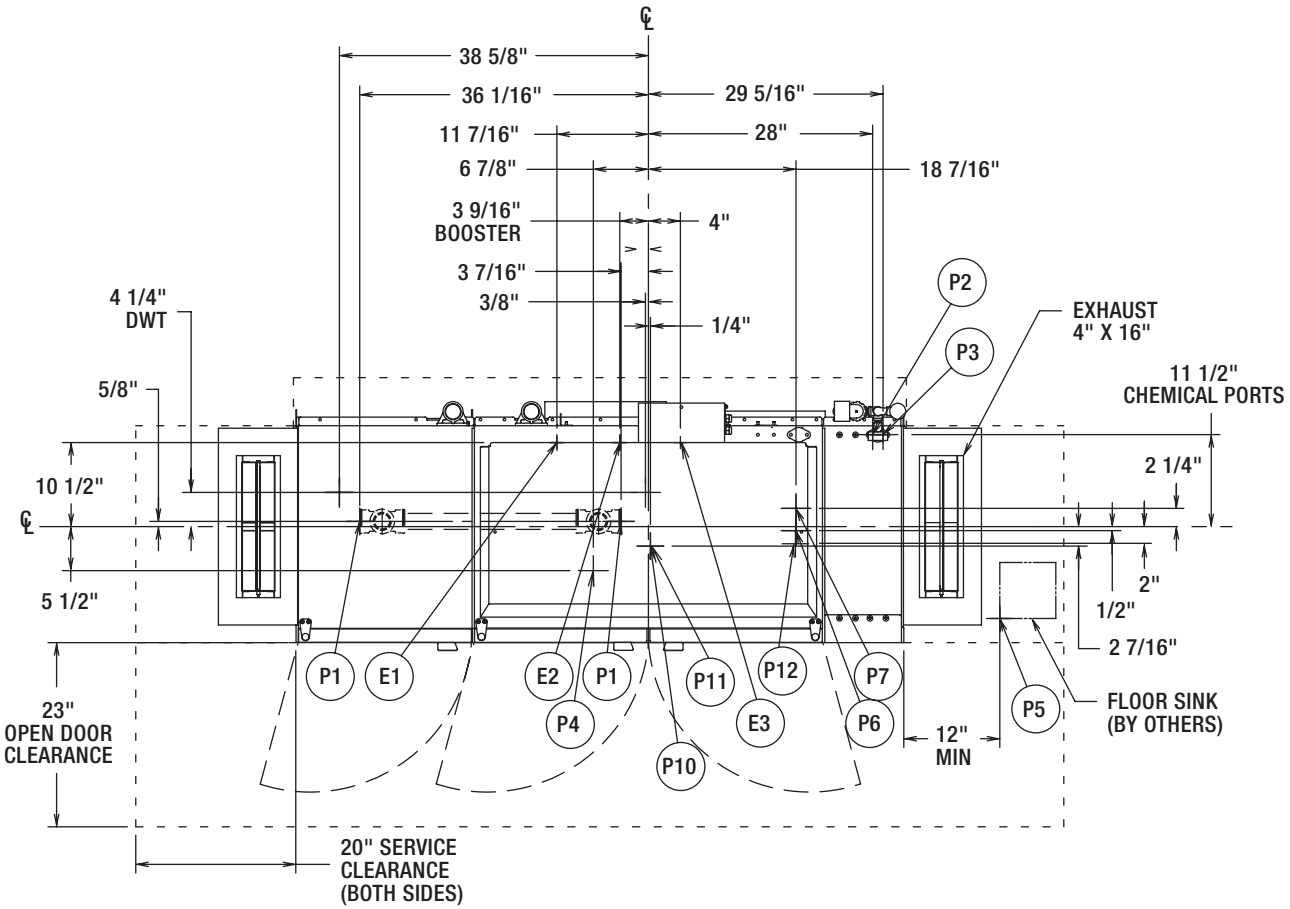

MISCELLANEOUS NOTES:

OPTIONAL VENT HOODS OR EXTENDED HOODS EXHAUST REQUIREMENTS: 200 CFM ENTRANCE END
400 CFM EXIT END.

ALL DIMENSIONS TAKEN FROM FLOOR LINE MAY BE INCREASED APPROXIMATELY 3/4" OR DECREASED 1/2".

75-7/8" INSIDE TANK (AT TABLE CONNECTION)
75-21/32" TABLE TO TABLE.

NET WEIGHT OF MACHINE: 820 LBS (STD HEIGHT), DOMESTIC SHIPPING WEIGHT: 926 LBS (STD HEIGHT).

CLeN LATENT AND SENSIBLE HEAT DISSIPATION INFORMATION ON F40459.

SERVICE CONNECTION FOR MOTORS AND CONTROLS

MOTORS: 1/6 HP CONVEYOR 2 HP WASH			
VOLTAGE	RATED AMPS	MINIMUM SUPPLY CIRCUIT CONDUCTOR AMPACITY	MAXIMUM PROTECTIVE DEVICE
208-240/60/3	16.3	20	20
380/60/3	11.1	15	15
480/60/3	9.4	15	15
600/60/3	8.4	15	15
208-240/60/1	27.9	35	35

PLUMBING NOTES:

ELECTRIC, STEAM, AND GAS HEATS

WATER HAMMER ARRESTOR (MEETING ASSE-1010 STANDARD OR EQUIVALENT) TO BE SUPPLIED (BY OTHERS) IN COMMON WATER SUPPLY LINE AT SERVICE CONNECTION.

RECOMMENDED WATER HARDNESS TO BE 3 GRAINS OR LESS FOR BEST RESULTS.

FOR NON-BOOSTER MACHINE (P6 CONN):
RECOMMENDED BUILDING FLOWING WATER PRESSURE TO THE DISHWASHER IS 20 PSI, (15 PSI MIN - 25 PSI MAX).
IF PRESSURES HIGHER THAN 25 PSI ARE PRESENT, A PRESSURE REGULATING VALVE WITH INTERNAL THERMAL EXPANSION BY-PASS MUST BE SUPPLIED (BY OTHERS) IN THE WATER LINE TO THE DISHWASHER.

FOR CONVENIENCE WHEN CLEANING, WATER TAP SHOULD BE INSTALLED NEAR MACHINE WITH HEAVY DUTY HOSE AND SQUEEZE VALVE.

WHEN USED, CHEMICAL SANITIZING FEEDER MUST BE CERTIFIED TO NSF STANDARD 29.

GAS HEAT ONLY

FOR NATURAL GAS, PRESSURE TO THE BURNER (CUSTOMER CONNECTION) SHOULD BE 3.5" MIN, 7" MAX W.C.

FOR LP GAS, PRESSURE TO THE BURNER (CUSTOMER CONNECTION) SHOULD BE 8" MIN, 11" MAX. W.C.

IF GAS PRESSURE IS HIGHER THAN 7" (NAT) OR 11" (LP) W.C., A PRESSURE REGULATING VALVE MUST BE INSTALLED (BY OTHERS) IN THE GAS LINE TO THE DISHWASHER.

GAS HEAT (NATURAL OR LP) BTU/HR INPUT - 78,000.

GAS EXHAUST VENTING MUST BE INSTALLED ACCORDING TO LOCAL CODE. DO NOT CONNECT FLUE TO POWER VENT. SEE INSTALLATION MANUAL FOR GAS VENTING.

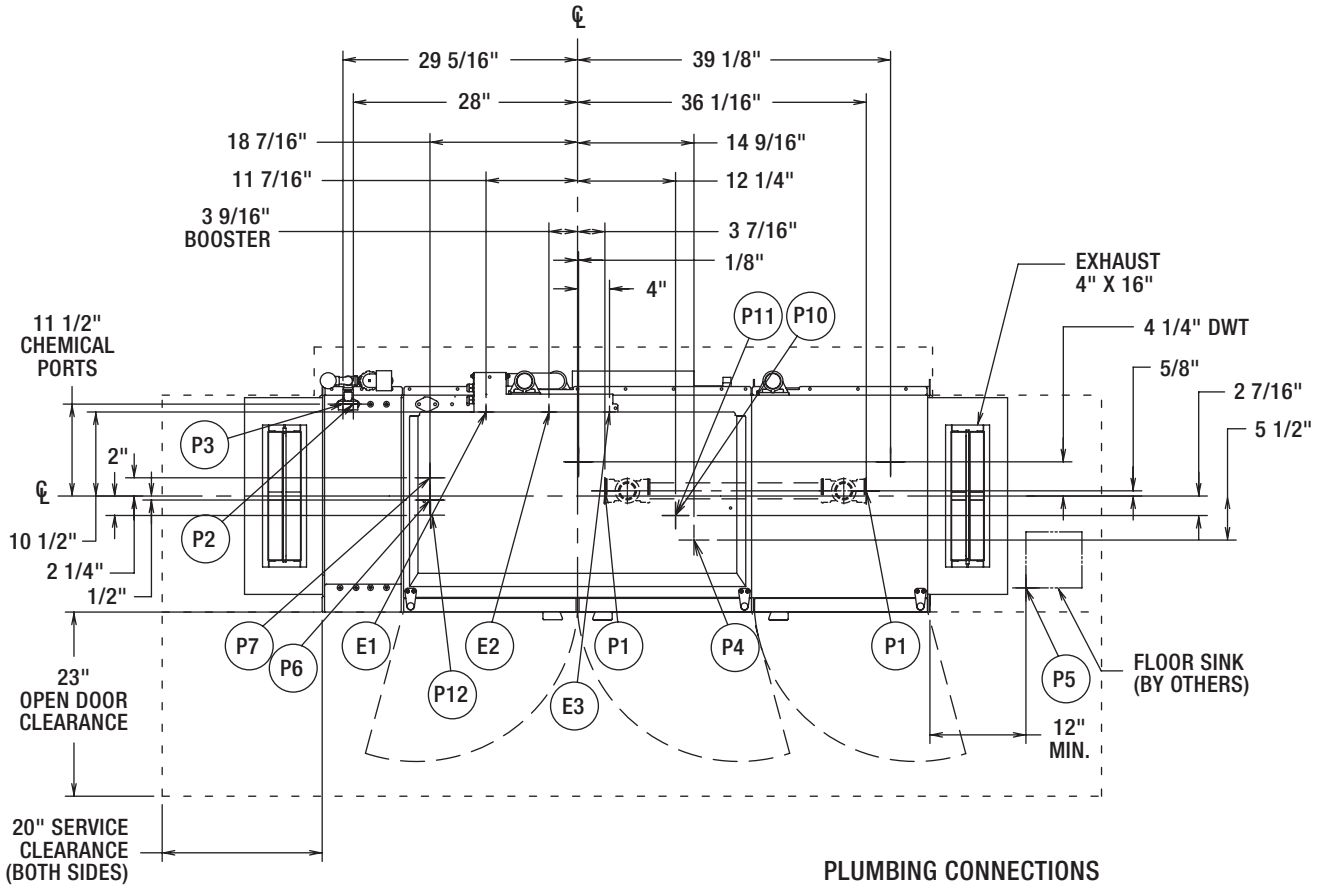

PLUMBING CONNECTIONS

CONNECTION INFORMATION
(AFF = ABOVE FINISHED FLOOR)

LEGEND

ELECTRIC, STEAM, AND GAS HEATS

P1 DRAIN: 2" FPT, 7-3/8" AFF TWO POSSIBLE CONNECTIONS; MAY BE DRAINED TO EITHER SIDE OF VALVE, PLUG OPPOSITE SIDE.

P2 SANITIZER FEEDER: REMOVE 1/8" NPT PIPE PLUG TO ACCESS TAPPED HOLE. 1/8" NPT 59-1/2" AFF (LOW TEMP ONLY)

P3 RINSE FEEDER: REMOVE 1/8" NPT PIPE PLUG TO ACCESS TAPPED HOLE. 1/8" NPT 59-9/16" AFF.

P4 DETERGENT PROBE SENSOR: REMOVE CAP AND STUD ASSEMBLY TO ACCESS 7/8" DIA HOLE (WASH TANK ONLY). 14-5/8" AFF.

P5 INDIRECT DRAIN-FLOOR SINK: BY OTHERS, 0" AFF. WHEN REQUIRED, INSTALL FLOOR SINK OUTSIDE THE PERIMETER OF THE DISHWASHER.

P6 COMMON WATER CONNECTION: 1/2" FPT, 11-3/16" AFF.
HIGH TEMP. W/O BOOSTER 180°F MIN. 194°F MAX.
LOW TEMP. 120°F MIN.

P7 COMMON WATER CONNECTION: 1/2" FPT, 11-3/16" AFF
HIGH TEMP. W/15K BOOSTER 140°F MIN.
HIGH TEMP. W/30K BOOSTER 110°F MIN.

GAS HEAT ONLY

P10 GAS CONNECTION - NAT., 1/2" FPT, 10-3/4" AFF; 3.5" MIN, 7" MAX W.C. INCOMING.

P11 GAS CONNECTION - L.P., 1/2" FPT, 10-3/4" AFF; 8" MIN, 11" MAX W.C. INCOMING.

OPTIONAL DRAIN WATER TEMPERING

P12 COLD WATER CONNECTION: 1/2" FPT, COLD TEMP 80°F MAX 7-3/8" AFF.

ELECTRICAL CONNECTIONS

CONNECTION INFORMATION
(AFF = ABOVE FINISHED FLOOR)

LEGEND

ELECTRIC, STEAM, AND GAS HEATS

E1 ELECTRIC CONNECTION: SINGLE POINT, ELEC, GAS, & STEAM, 1-1/4" CONDUIT HOLE OR 2" CONDUIT, 63-3/4" AFF

E2 ELECTRIC CONNECTION: BOOSTER. 15KW/30KW, 1-1/4" CONDUIT HOLE OR 2" CONDUIT HOLE, 63-3/4" AFF

E3 ELECTRIC CONNECTION: DETERGENT, SANITIZER (LOW TEMP ONLY) AND RINSE FEEDERS. 1/2" CONDUIT. 64-1/4" AFF

HOBART
701 S Ridge Avenue, Troy, OH 45374
1-888-4HOBART • www.hobartcorp.com

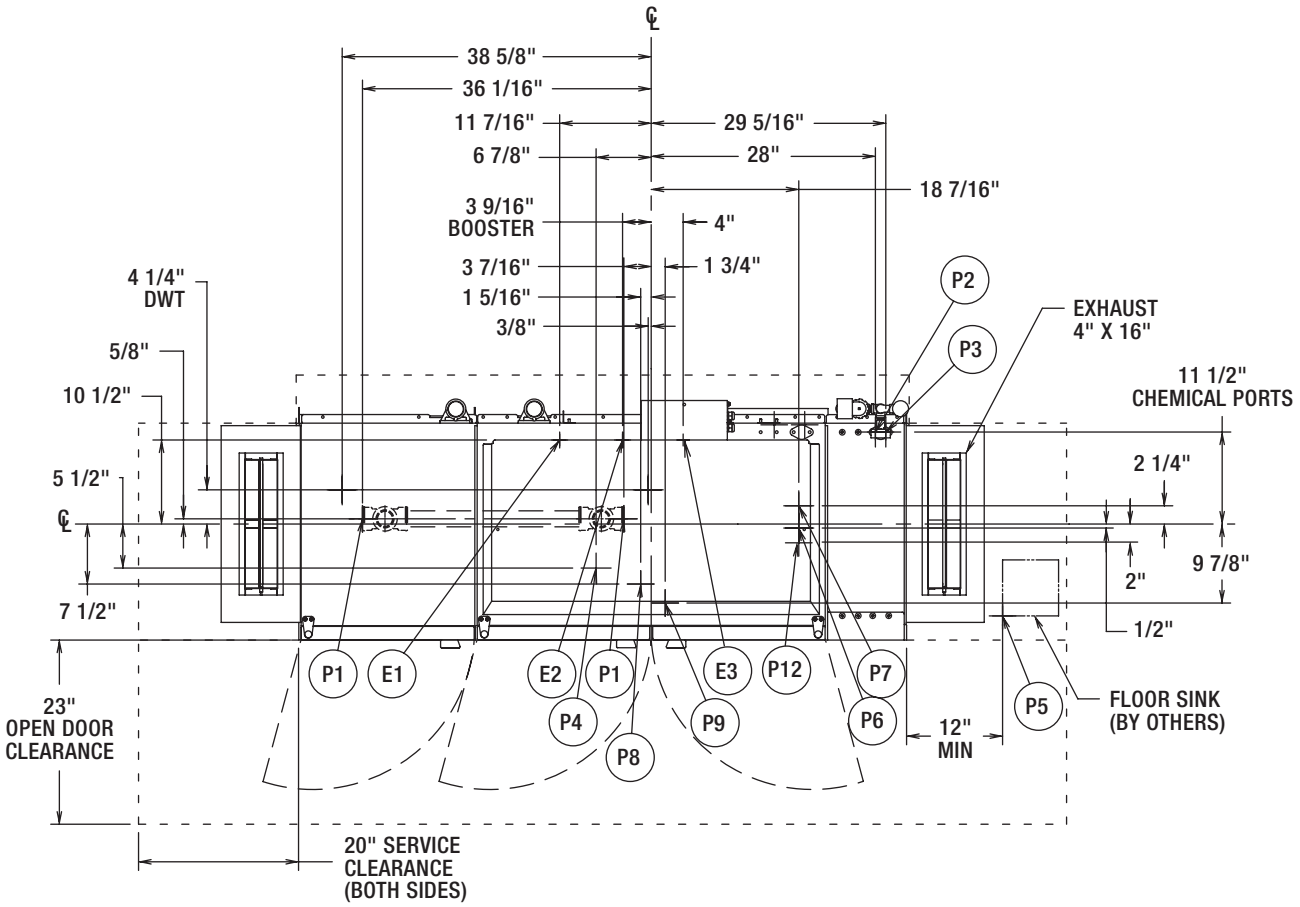

MISCELLANEOUS NOTES:

OPTIONAL VENT HOODS OR EXTENDED HOODS EXHAUST REQUIREMENTS: 200 CFM ENTRANCE END
400 CFM EXIT END.

ALL DIMENSIONS TAKEN FROM FLOOR LINE MAY BE INCREASED APPROXIMATELY 3/4" OR DECREASED 1/2".

75-7/8" INSIDE TANK (AT TABLE CONNECTION)
75-21/32" TABLE TO TABLE.

NET WEIGHT OF MACHINE: 820 LBS (STD HEIGHT), DOMESTIC SHIPPING WEIGHT: 926 LBS (STD HEIGHT).

CLeN LATENT AND SENSIBLE HEAT DISSIPATION INFORMATION ON F40459.

SERVICE CONNECTION FOR MOTORS AND CONTROLS

MOTORS: 1/6 HP CONVEYOR 2 HP WASH			
VOLTAGE	RATED AMPS	MINIMUM SUPPLY CIRCUIT CONDUCTOR AMPACITY	MAXIMUM PROTECTIVE DEVICE
200-240/50/3	16.6	20	20
208-240/60/3	16.3	20	20
380-415/50/3	10.1	15	15
380/60/3	11.1	15	15
480/60/3	9.4	15	15
600/60/3	8.4	15	15
208-240/60/1	27.9	35	35

PLUMBING NOTES:

ELECTRIC, STEAM, AND GAS HEATS

WATER HAMMER ARRESTOR (MEETING ASSE-1010 STANDARD OR EQUIVALENT) TO BE SUPPLIED (BY OTHERS) IN COMMON WATER SUPPLY LINE AT SERVICE CONNECTION.

RECOMMENDED WATER HARDNESS TO BE 3 GRAINS OR LESS FOR BEST RESULTS.

FOR NON-BOOSTER MACHINE (P6 CONN):
RECOMMENDED BUILDING FLOWING WATER PRESSURE TO THE DISHWASHER IS 20 PSI, (15 PSI MIN - 25 PSI MAX).
IF PRESSURES HIGHER THAN 25 PSI ARE PRESENT, A PRESSURE REGULATING VALVE WITH INTERNAL THERMAL EXPANSION BY-PASS MUST BE SUPPLIED (BY OTHERS) IN THE WATER LINE TO THE DISHWASHER.

FOR CONVENIENCE WHEN CLEANING, WATER TAP SHOULD BE INSTALLED NEAR MACHINE WITH HEAVY DUTY HOSE AND SQUEEZE VALVE.

WHEN USED, CHEMICAL SANITIZING FEEDER MUST BE CERTIFIED TO NSF STANDARD 29.

STEAM HEAT ONLY

FLOWING STEAM PRESSURES ABOVE 50 PSI MUST HAVE A PRESSURE REGULATOR (BY OTHERS) INSTALLED IN THE STEAM LINE.

SHUT OFF VALVE MUST BE SUPPLIED (BY OTHERS) IN THE STEAM LINE TO THE DISHWASHER.

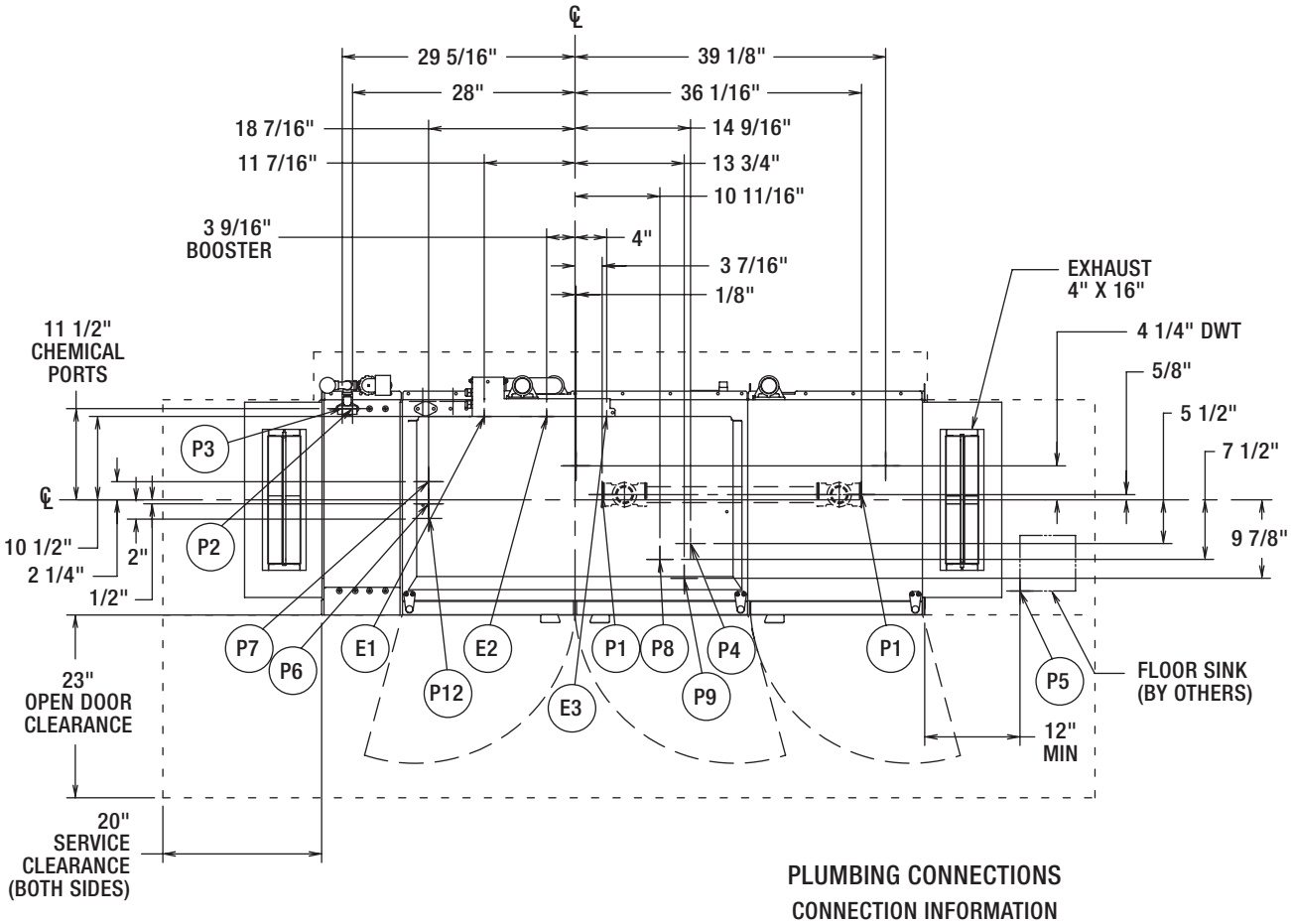

ELECTRICAL CONNECTIONS

CONNECTION INFORMATION
(AFF = ABOVE FINISHED FLOOR)

LEGEND

ELECTRIC, STEAM, AND GAS HEATS

E1 ELECTRIC CONNECTION: SINGLE POINT, ELEC, GAS, & STEAM, 1-1/4" CONDUIT HOLE OR 2" CONDUIT, 63-3/4" AFF

E2 ELECTRIC CONNECTION: BOOSTER. 15KW/30KW, 1-1/4" CONDUIT HOLE OR 2" CONDUIT HOLE, 63-3/4" AFF

E3 ELECTRIC CONNECTION: DETERGENT, SANITIZER (LOW TEMP ONLY) AND RINSE FEEDERS. 1/2" CONDUIT. 64-1/4" AFF

PLUMBING CONNECTIONS

CONNECTION INFORMATION
(AFF = ABOVE FINISHED FLOOR)

LEGEND

ELECTRIC, STEAM, AND GAS HEATS

P1 DRAIN: 2" FPT, 7-3/8" AFF TWO POSSIBLE CONNECTIONS; MAY BE DRAINED TO EITHER SIDE OF VALVE, PLUG OPPOSITE SIDE.

P2 SANITIZER FEEDER: REMOVE 1/8" NPT PIPE PLUG TO ACCESS TAPPED HOLE. 1/8" NPT 59-1/2" AFF (LOW TEMP ONLY)

P3 RINSE FEEDER: REMOVE 1/8" NPT PIPE PLUG TO ACCESS TAPPED HOLE. 1/8" NPT 59-9/16" AFF.

P4 DETERGENT PROBE SENSOR: REMOVE CAP AND STUD ASSEMBLY TO ACCESS 7/8" DIA HOLE (WASH TANK ONLY). 14-5/8" AFF.

P5 INDIRECT DRAIN-FLOOR SINK: BY OTHERS, 0" AFF. WHEN REQUIRED, INSTALL FLOOR SINK OUTSIDE THE PERIMETER OF THE DISHWASHER.

P6 COMMON WATER CONNECTION: 1/2" FPT, 11-3/16" AFF.
HIGH TEMP. W/O BOOSTER 180°F MIN. 194°F MAX.
LOW TEMP. 120°F MIN.

P7 COMMON WATER CONNECTION: 1/2" FPT, 11-3/16" AFF
HIGH TEMP. W/15K BOOSTER 140°F MIN.
HIGH TEMP. W/30K BOOSTER 110°F MIN.

STEAM HEAT ONLY

P8 STEAM COILS: 10 TO 50 PSI FLOWING, 3/4" FPT, 11-1/8" AFF.

P9 CONDENSATE RETURN: A 10 PSI MINIMUM DIFFERENTIAL PRESSURE ACROSS THE STEAM TRAP MUST BE MAINTAINED. 3/4" FPT. 11-1/8" AFF ONE CONNECTION. (ONE BUCKET TYPE TRAP FURNISHED).

OPTIONAL DRAIN WATER TEMPERING

P12 COLD WATER CONNECTION: 1/2" FPT, COLD TEMP 80°F MAX 7-3/8" AFF.

CLPS76*e*N-BAS DISHWASHER

HOBART
701 S Ridge Avenue, Troy, OH 45374
1-888-4HOBART • www.hobartcorp.com

SPECIFICATIONS: Meets requirements of ASSE Standard No. 1004.

DESIGN: Semi automatic, high or low temperature single-tank, rack-type dishwasher with flexible thermal layer curtains at the ends of chamber and between wash and final rinse zones. Insulated hinged inspection doors located in front of machine provide easy access to wash arms, rinse arms, strainer, strainer basket, and pump intake screen. Length of machine inside tank (at table connection) 76". Machine designed to clean and sanitize with hot water 160°F wash and 180°F (minimum) final rinse, or low temperature 130°F wash and 120°F final rinse and a chemical sanitizer. Water hardness recommended to be 3 gr. or less for best results. Automatic interlocks shut off pump and conveyor if door is opened when machine is in operation.

CONSTRUCTION: Tanks, chambers, frame, legs, control box, doors, and all panels are constructed of stainless steel.

PUMPS: The two recirculating stainless steel pumps and impellers with ceramic seat seals. Easily accessible pump assembly permits quick inspection. The pumps are self-draining. All piping distributing water to the upper and lower wash arms is stainless steel tubing.

PUMP MOTORS: Built for Hobart 2 hp grease-packed ball bearings, splash proof, ventilated with manual, resettable inherent overload protection. Available in electrical specifications of 208-240/60/1, 208-240/60/3, 480/60/3 and 600/60/3. Also available, but not submitted for UL listing are 200-240/50/3 and 380-415/50/3.

CONTROLS: A stainless steel control module with power and "start/stop" buttons is mounted on top of the machine. Machine control circuitry will be operated from a 120-volt control circuit transformer. Electrical components are completely wired with 105°C, 600V thermoplastic insulated wire with stranded conductors routed through UL listed electrical conduit or covered wire way.

CONVEYOR: Rapid return drive, designed for more even throughput of racks and allows for a 16-inch separation between the wash and the rinse zone. Racks conveyed automatically through wash and rinse zones and onto clean dish table. Ball Detent Clutch drive prevents damage to machine or racks, should movement of racks be obstructed. Rack tracks, conveyor structure, and drive units of stainless steel for 19¾" x 19¾" racks as standard. Conveyor speed: 6.8 FPM.

DRIVE MOTOR: Built for Hobart, ⅙ horsepower gear motor, ventilated with manual, resettable inherent overload protection. Available in electrical specifications of 208-240/60/1, 208-240/60/3, 480/60/3 and 600/60/3. Also available, but not submitted for UL Listing are 200-240/50/3 and 380-415/50/3.

POWER SCRAPPER: CLPS76*e*N power scrapper is equipped with an upper and lower wash arm with specially shaped nozzles having large openings and arranged to effectively scrap all types of tableware. Power scrapper arms and end caps are easily removable for cleaning without use of tools. Removable perforated stainless steel strainer pans support a deep perforated stainless steel basket. Basket and strainer pans (3) can be removed without lower wash arm removal.

POWER WASH: Wash tank is equipped with upper and lower stainless steel CFD Wash Arms which effectively direct water jets to all ware surfaces. Both upper and lower wash arms are self-aligning and have easily removable end caps for cleaning without use of tools. A removable perforated stainless steel strainer pan supports a deep perforated stainless steel basket.

FINAL RINSE: Final rinse flow rate: 2.3 gpm, .56 gpr, 138-gph. Stainless steel upper and lower Auto Position Rinse Arms™ have single rows of nozzles. Racks entering the rinse zone automatically trigger rinse. Final rinse water line is equipped with a vacuum breaker downstream of an electrically operated solenoid valve in common piping system. Removable perforated stainless steel strainer basket can be removed without removing lower rinse arm. Rinse agent and Low Temp Final Rinse – Sanitizer agent (5.25% sodium hypochlorite – bleach) dispenser injection ports provided in final rinse piping above chamber. **Caution:** Certain materials, including silver, aluminum, and pewter are attacked by sodium hypochlorite (bleach) in the chemical sanitizing dishwasher mode of operation.

FILL: Fill water line is equipped with vacuum breaker on downstream side of electrically operated solenoid valve in common piping system, for automatic maintenance of tank level.

DRAIN AND OVERFLOW: Large bell-type automatic overflow and drain valve inside power scrapper tank controlled from inside of machine. Power scrapper overflows to drain. Wash tank drain controlled from inside of the machine overflows to power scrapper through large internally mounted stainless steel tubing. Drain seals are large diameter high temperature o-rings. Drain automatically seats by closing inspection doors. Common drain utilizes a removable large diameter stainless steel tube sealed by rubber o-rings at each drain housing. Drain housing can be plumbed from load or unload end of machine.

STANDARD EQUIPMENT: Digital display of power scrapper, wash and final rinse temperature. Positive low water protection for tank heat. Thermal Layered Curtains throughout machine are keyed to ensure proper placement. Drains are automatically closed when inspection doors are closed. Stainless steel adjustable feet. Bolted stainless steel enclosure panels around perimeter and underneath machine. Automatic tank fill. Door interlocks. Auto-timer. Vent fan and booster heater controls. Single point electrical connection. Low temperature alerts. Service diagnostics. Dirty water indicator. Configurable "intelligent" delime notification. NSF rated configurable Pot and Pan dwell mode. Energy Saver Mode. NAFEM Data Protocol compliant.

TANK HEATING SELECTIONS (must choose one):

ELECTRIC: One electric Incoloy® sheathed immersion heater (15 KW) removable from inside tank. Tank water temperature is controlled by microprocessor controlled thermostat with positive low-water protection and magnetic contactor. (Disconnect switches not furnished.) A high limit device mounted on the surface of the tank additionally protects heating element.

STEAM: One-inch stainless steel steam coil. Tank water temperature controlled by microprocessor controlled thermostat with positive low-water protection. Steam supplied to machine through high temperature steam solenoid valve and line strainer.

GAS: Regulated infrared immersion tube gas burner system. Microprocessor controlled thermostat and a blower with a pressure switch control tank water temperature. Positive low water protection is provided. A high limit device mounted on the surface of the tube additionally protects immersion tube. A solid-state igniter board controls the gas valve and provides flame ignition. A transformer steps the control circuit voltage down from 120 volts to 24 volts to power the igniter board and gas valve. For natural gas, gas pressure to burner (customer connection) not to exceed 7" W.C. For LP gas, gas pressure to burner (customer connection) not to exceed 11" W.C. If gas pressure is higher than 7" W.C. natural or 11" W.C. LP pressure regulating valve must be supplied (by others) in the gas line to the dishwasher.

OPTIONAL EQUIPMENT AT EXTRA COST:

Stainless steel pressureless booster heater. Stainless steel vent hoods with vent stack and locking-type damper. Higher than standard chamber. Side loaders and unloaders. Floor mounted steam booster. 19¾" x 19¾" peg, combination and miscellaneous racks. Table limit switch. Drain water tempering kit.

As continued product improvement is a policy of Hobart, specifications are subject to change without notice.

LITHO IN U.S.A. (H-01) Printed On Recycled Paper

Commercial Kitchen Equipment Parts

Find more Hobart equipment resources at

parthubz.com/equipment/hobart

Need parts or service?

Call 833-700-8006

support@parthubz.com

parthubz.com