Commercial Kitchen Equipment Parts

HOBART HS7

Hobart HS7 Specification Sheet

Provided by PartHubz

parthubz.com

833-700-8006 | support@parthubz.com

HOBART

Project _____

AIA # _____ SIS # _____

Item # _____ Quantity _____ C.S.I. Section 114000

FOOD PREPARATION

HS SLICER SERIES – HS7/HS7N

HS7/HS7N

Automatic Heavy-Duty Slicer

NSF

ETL LISTED C US

Intertek

SPECIFIER STATEMENT

Specified slicer will be an NSF rated heavy-duty automatic HS slicer with a patented removable knife option and 13" CleanCut™ knife. CleanCut™ knife with cobalt alloy edge increases yield and improves slice quality. Slicer offers zero knife exposure, removable ring guard cover and a stainless steel knife cover. Tilting, removable carriage provides complete access for deep cleaning. Base is constructed from sanitary burnished aluminum to limit crevices and allow for easy cleanup. Features ½ HP knife drive motor, 4 carriage speeds and 3 stroke lengths.

MODELS

- ❑ **HS7** Automatic slicer with removable knife*
- ❑ **HS7-PHS** Automatic marine slicer with removable knife*
- ❑ **HS7N** Automatic slicer with non-removable knife
- ❑ **HS7N-HV50C** High voltage automatic slicer with non-removable knife
- ❑ **HS7N-HV60C** High voltage automatic slicer with non-removable knife

STANDARD FEATURES

Features in bold are exclusive to Hobart

- ½ HP knife drive motor
- **13" CleanCut™ knife with cobalt alloy edge**
- **Zero knife exposure**
- **Removable knife option***
- **Top-mounted Borazon® sharpening system**
- Variable 4-speed automatic product carriage with front-mounted controls
- Three stroke lengths
- **Tilting and removable carriage system**
- **Double-action indexing system**
- No-volt release

ACCESSORIES (Available at extra cost)

- Full fence
- Food chute
- Debris deflector

Approved by _____ Date _____ Approved by _____ Date _____

SOLUTIONS / BENEFITS

PERFORMANCE

13" CleanCut™ Knife
- Super alloy edge stays sharp longer
- Lasts 2 to 3 times longer than carbon coated or stainless steel knives.

Machined Grooves on Gauge Plate and Knife Cover
- Reduces drag for smooth slicing motion

Double-Action Indexing Cam
- First full revolution of the indexing knob provides precise control of shaving, chipping and thin slicing
- Second revolution opens the gauge plate quickly for thicker slicing
- Gauge plate holds position for consistent, precision slicing

½ HP Knife Drive Motor
- The power needed to slice cheese and meat with no shredding

Variable Speed Automatic Product Carriage
- 4 speeds, 3 stroke lengths to handle a wide variety of products

Top-Mounted Borazon® Sharpening System
- Hones in 15 seconds

EASE OF USE

Lift Assist
- Helps user get underneath slicer to clean

Removable Meat Grip Assembly
- Opens for unobstructed loading

Tilting and Removable Carriage
- Makes it easy to keep slicer clean and sanitary

Magnetically Secured Knife Cover
- No loose or moving parts make operation easier

Variable Speed Automatic Product Carriage
- 4 speeds, 3 stroke lengths to handle a wide variety of products

Top-Mounted Borazon® Sharpening System
- Single action sharpener makes it easier for the user to operate

SANITATION & CLEANING

Sanitary One-Piece Base
- Has fewer crevices where bacteria may grow
- Available in burnished aluminum

Lift Assist
- Makes it easy to clean underneath the slicer, saving time

Patented Removable Ring Guard Cover
- Prevents debris build-up around the blade

Patented Removable Knife
- Removes easily and cleans in sink or dishwasher

Tilting and Removable Carriage
- Makes it easy to keep slicer clean and sanitary

Removable Meat Grip Assembly
- Dishwasher safe

Top-Mounted Borazon® Sharpening System
- Removes for easy cleaning

OPERATOR ASSURANCE

Zero Knife Exposure
- Operator is protected while sharpening and cleaning

Top-Mounted Borazon® Sharpening System
- Operator is protected during knife sharpening

Patented Removable Knife
- Removes easily and cleans in sink or dishwasher

Magnetically Secured Knife Cover
- No loose or moving parts make operation easier

Patented Removable Ring Guard Cover
- Provides extra protection for operator

Two Interlocks
1. **No Volt Release (NVR)**
   - Slicer must be restarted if power fails or slicer is unplugged
2. **Home to Start**
   - Slicer will not turn on until carriage is in home position

SPECIFICATIONS

Motor: ½ HP knife drive motor, knife is driven by a Hobart Poly V-Belt and runs at 430 RPM for optimal performance.

Electrical:
HS7/HS7N – 120/60/1; 5.6 amps
HS7-PHS – 240/60/1; 2.8 amps
HS7N-HV50C – 220-240/50/1; 2.8 amps
HS7N-HV60C – 220-240/60/1; 2.8 amps

Controls: Moisture protected push button switch.

Cord and Plug: 6 foot, three-wire power supply cord and plug. Plug not furnished on export models.

Construction: One-piece, sanitary burnished aluminum base. Fewer places to harbor debris; limits crevices or holes in which food can lodge. Product tray and gauge plate also burnished aluminum. Stainless steel top cover.

Capacity: The carriage will take food up to 5.75" x 10.75" rectangle or 7.5" in diameter.

Gauge Plate: Gauge plate is a heavy aluminum extrusion with machined grooves for smooth feeding. Adjustable to cut any thickness of slice up to 1".

Knife: The knife is approximately 13", constructed of 304L stainless steel and high performance Stellite alloy. Knife cover is retained magnetically, and is quickly removed by pulling straight back on the top cover knob.

Removable Ring Guard Cover: Fits on top of ring guard to catch food debris. When removed, reveals a 0.12" space between knife and guard for easier flossing. Ring guard is made with Zytel™ plastic and can be washed in warewasher or three compartment sink.

Top-Mounted Borazon® Sharpening System: Single action operation utilizing two Borazon® stones to sharpen and hone in five seconds. Removable, top mounted and warewasher safe. When sharpener is removed for cleaning, knife edge is completely shielded. Borazon® stones have a lifetime guarantee.

Warranty: All parts and service coverage for one year including knife. Lifetime guarantee on Borazon® stones in the sharpening system.

Shipping Weight: 138 lb.

Plugs and Receptacles Dependent on Local Power Codes

Machine Voltages			
	120/60/1	**240/50/1**	**240/60/1**
Service Current Requirement if Plug Connected	15 Amp.		15 Amp.
Terminal Designation of Plug	2 Pole 3 Wire Grounding		2 Pole 3 Wire Grounding
NEMA Plug Configuration	5-15P		6-15P
Plug Configuration			
Molded Plug on Cord	Yes	No	Plug: HS7-PHS No Plug: HS7N-HV60C
Plug – Straight/Angle	Straight		Straight
NEMA Receptable or Connector Configuration	5-15R		6-15R
Power Cord Included	Yes	Yes	Yes

DETAILS AND DIMENSIONS

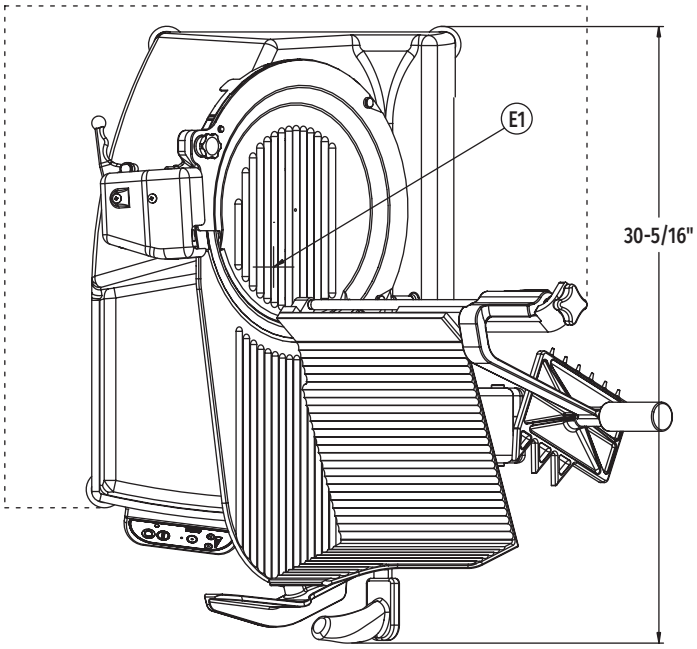

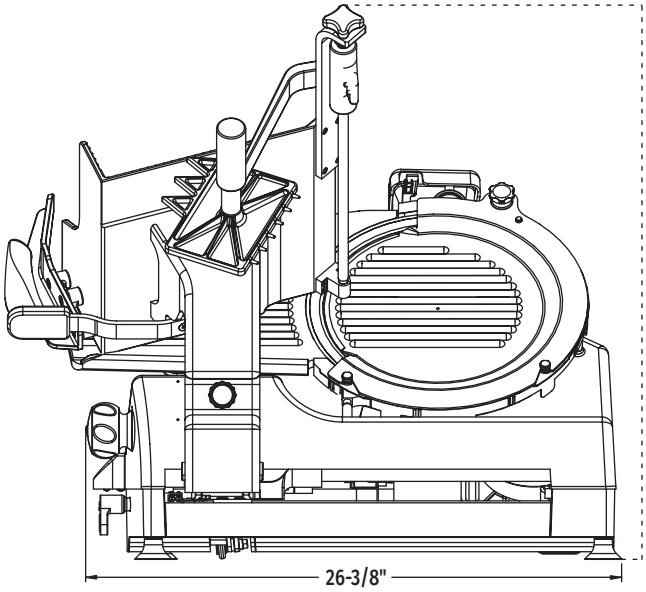

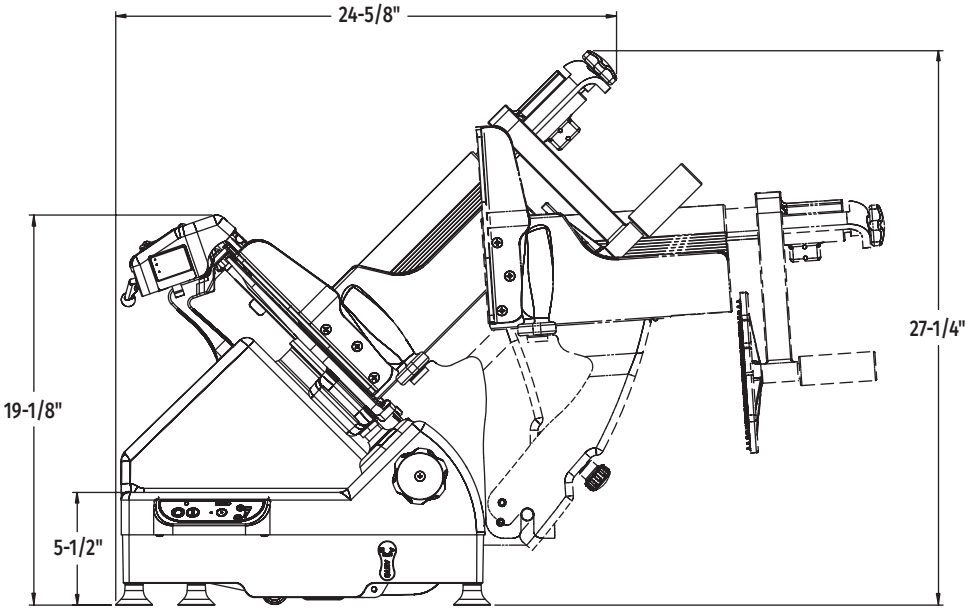

WARNING: **Electrical and grounding connections must comply with the applicable portions of the National Electrical Code and/or other local electrical codes.**

LEGEND

Electrical Connections	
E1	120/60/1; 5.6 Amps

As continued product improvement is a policy of Hobart, specifications are subject to change without notice.

CAD and/or Revit Files Available

Commercial Kitchen Equipment Parts

Find more Hobart equipment resources at

parthubz.com/equipment/hobart

Need parts or service?

Call 833-700-8006

support@parthubz.com

parthubz.com