Commercial Kitchen Equipment Parts

JOE TAP JT-QN24-220-R

Parts Manual

Provided by PartHubz

parthubz.com

833-700-8006 | support@parthubz.com

Wunder-Bar™ JoeTap

JT-NIT-RTD-4444
JT-QN24
JT-QN24-220-(X)

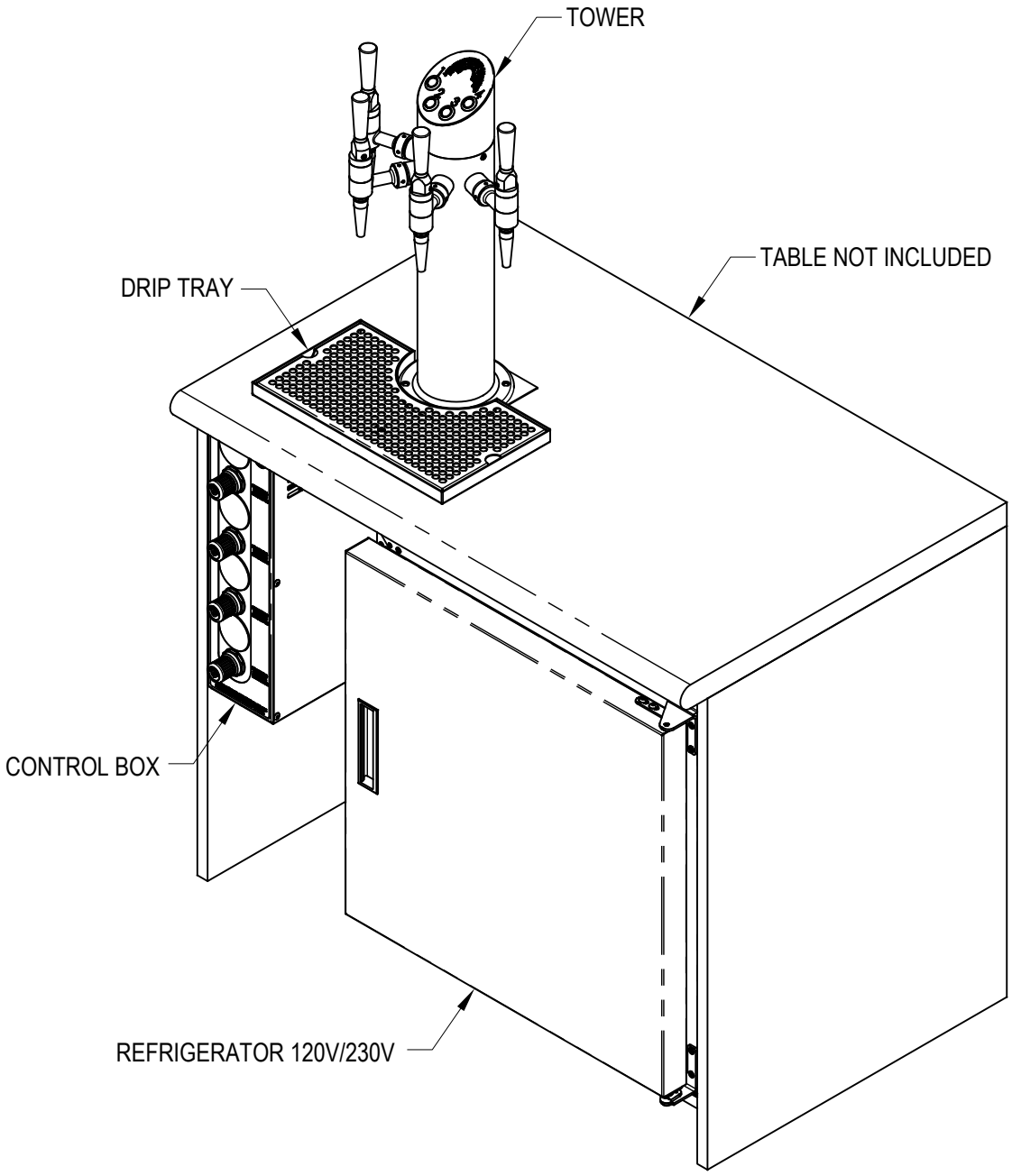

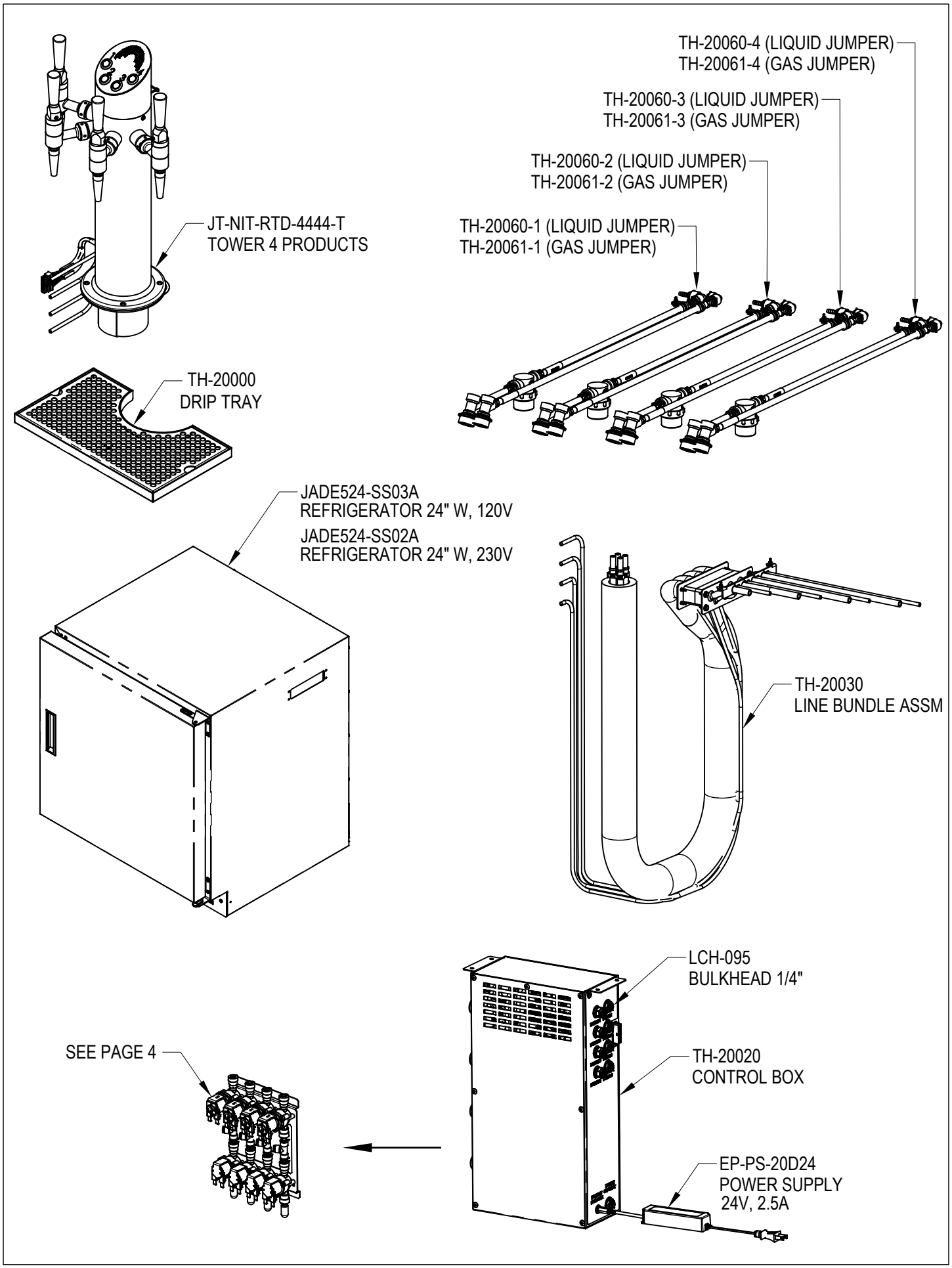
JT-NIT-RTD-4444-T
TOWER 4 PRODUCTS
TH-20060-4 (LIQUID JUMPER)
TH-20061-4 (GAS JUMPER)
TH-20060-3 (LIQUID JUMPER)
TH-20061-3 (GAS JUMPER)
TH-20060-2 (LIQUID JUMPER)
TH-20061-2 (GAS JUMPER)
TH-20060-1 (LIQUID JUMPER)
TH-20061-1 (GAS JUMPER)
TH-20000
DRIP TRAY
JADE524-SS03A
REFRIGERATOR 24" W, 120V
JADE524-SS02A
REFRIGERATOR 24" W, 230V
TH-20030
LINE BUNDLE ASSM
LCH-095
BULKHEAD 1/4"
SEE PAGE 4
TH-20020
CONTROL BOX
EP-PS-20D24
POWER SUPPLY
24V, 2.5A

INFUSION TOWER 4 PROD SELECTABLE NITRO

JT-NIT-RTD-4444-T

1	JT-NIT-RTD-4444-T	NITRO TOWER, 4-FAUCET
2	1101-794	FAUCET HANDLE - BLACK
3	JT-20A40	TOWER SHELL - SS, 4" COLUMN, JT-4444
4	JT-1331CTXSA	ELBOW SHANK, 1-3/4" x 1/4" x 1/4" NSF
5	JT-283PVDF	VENTURI INJECTOR
6	JT-14SCVR	CHECK VALVE - SINGLE, 1/4" X 1/4"
7	1635-20Y24	FAUCET, NITRO COFFEE
8	1607-20D23	PUSHBUTTON 19MM, HIGH ROUND HEAD
9	RR-25	TUBING BARRIER .265 X .375
10	PM-FT-21	CLAMP OETIKER #105
11	JT-PI451214FS	FTNG, ADAPTER, 3/8" x 1/2" THRD, FEMALE
12	RR-33	UNION 3/8
13	TH-10005	WIRING HARNESS ASSY,
14	TB20D3-K0500	TUBING, LLDPE, 1/4" OD , BLUE (GROUP 4)
15	TB20D2-K0500	TUBING, LLDPE, 1/4" OD , GREEN (GROUP 3)
16	TB20D1-K0500	TUBING, LLDPE, 1/4" OD , RED (GROUP 2)
17	JT-PE08BI0500FW	TUBING, LLDPE, 1/4" OD , WHITE (GROUP 1)
18	JT-P4FE4	FTNG, ELBOW, 1/4" TUBE x 1/4" FNPT, PP
19	TH-10013	HARNESS 8 WIRE, ASSY

* ITEMS IN PARENTHESIS AND ASTERISK ARE AS PART OF KIT ONLY

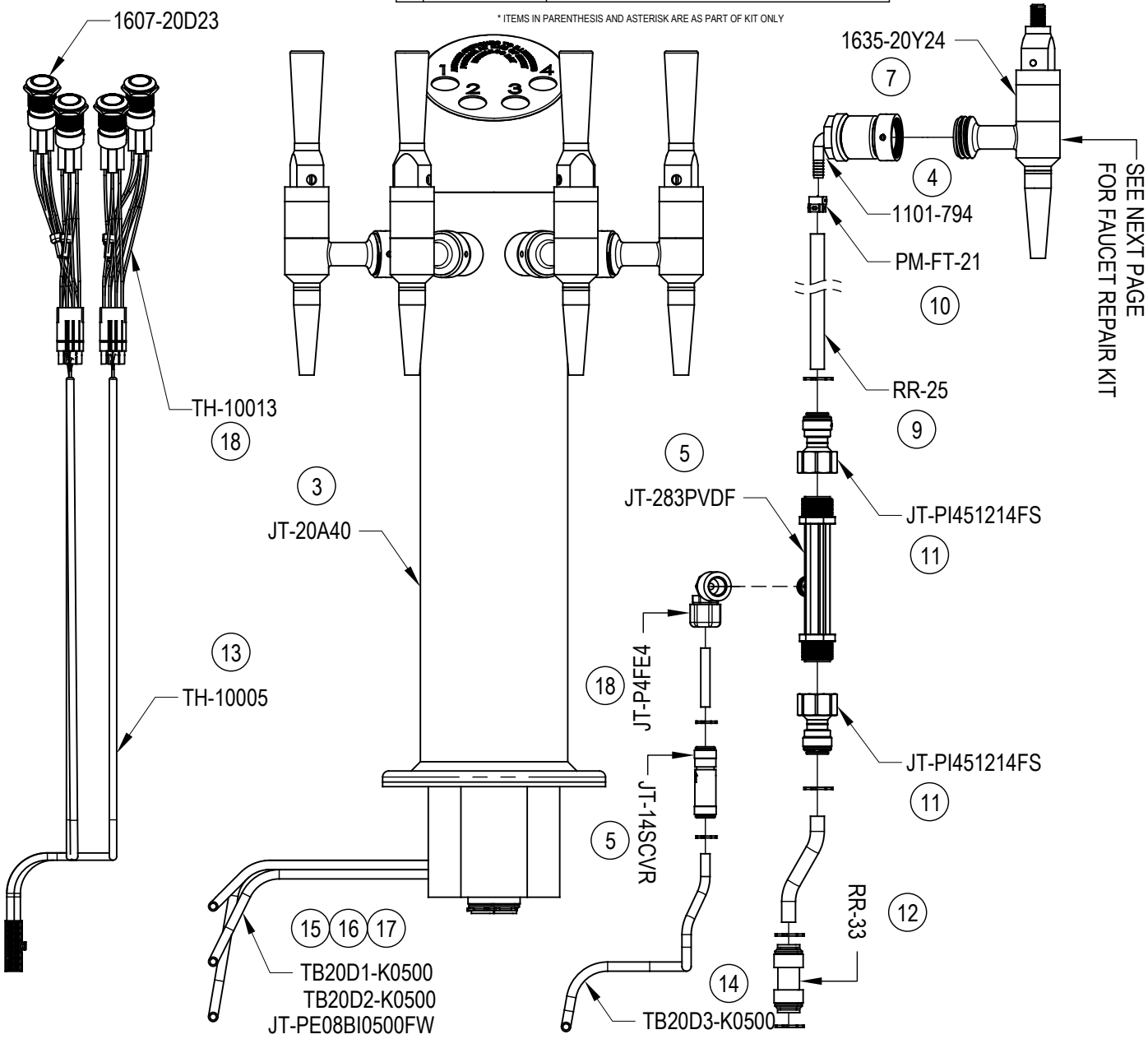

SOLENOID PANEL, ASSY

TH-10012

1	TH-10012	SOLENOID PANEL ASSY
	403-20283	HEAT SINK BRACKET, ALUM
	SLND-20D24-1	SOLENOID-20D24 W/ 8-32 TAPPED HOLE
	SLND-20D23	SOLENOID R MINI -118, 1/4" JG, NC, 24VDC
	CD-FT-102	TEE UNION 1/4"
	JT-PE08BI0500FW	TUBING LLDPR, 1/4" OD WHITE
	1635-20Y23	SILENCER - 1/4" OD STEM, PE

* ITEMS IN PARENTHESIS AND ASTERISK ARE AS PART OF KIT ONLY

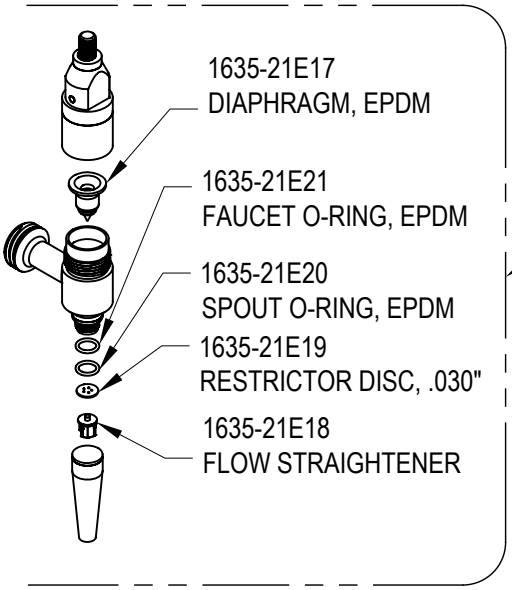

1635-20L10
FAUCET REPAIR KIT

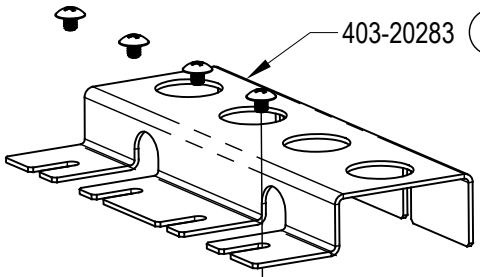

403-20283 (2)

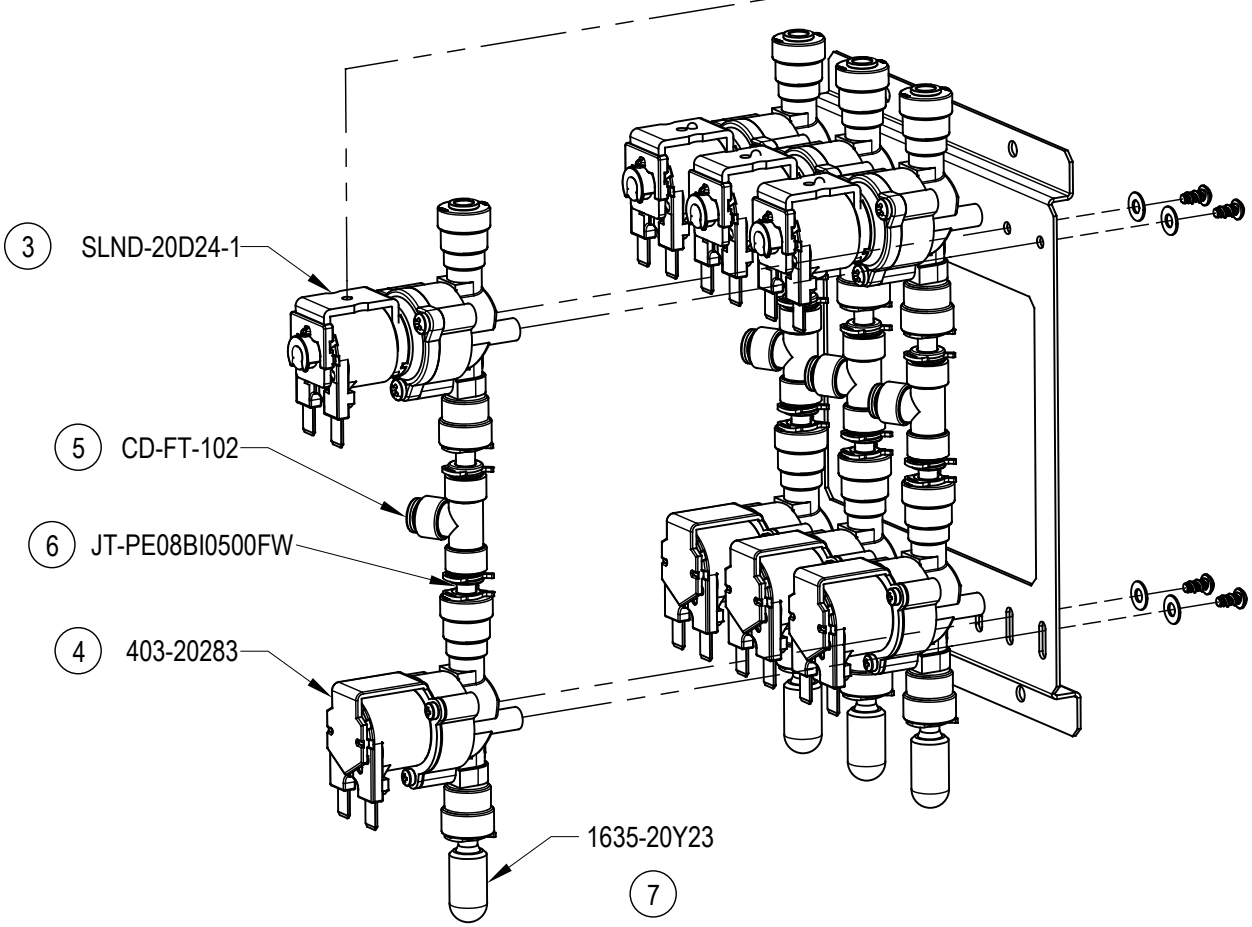

LINE BUNDLE ASSM

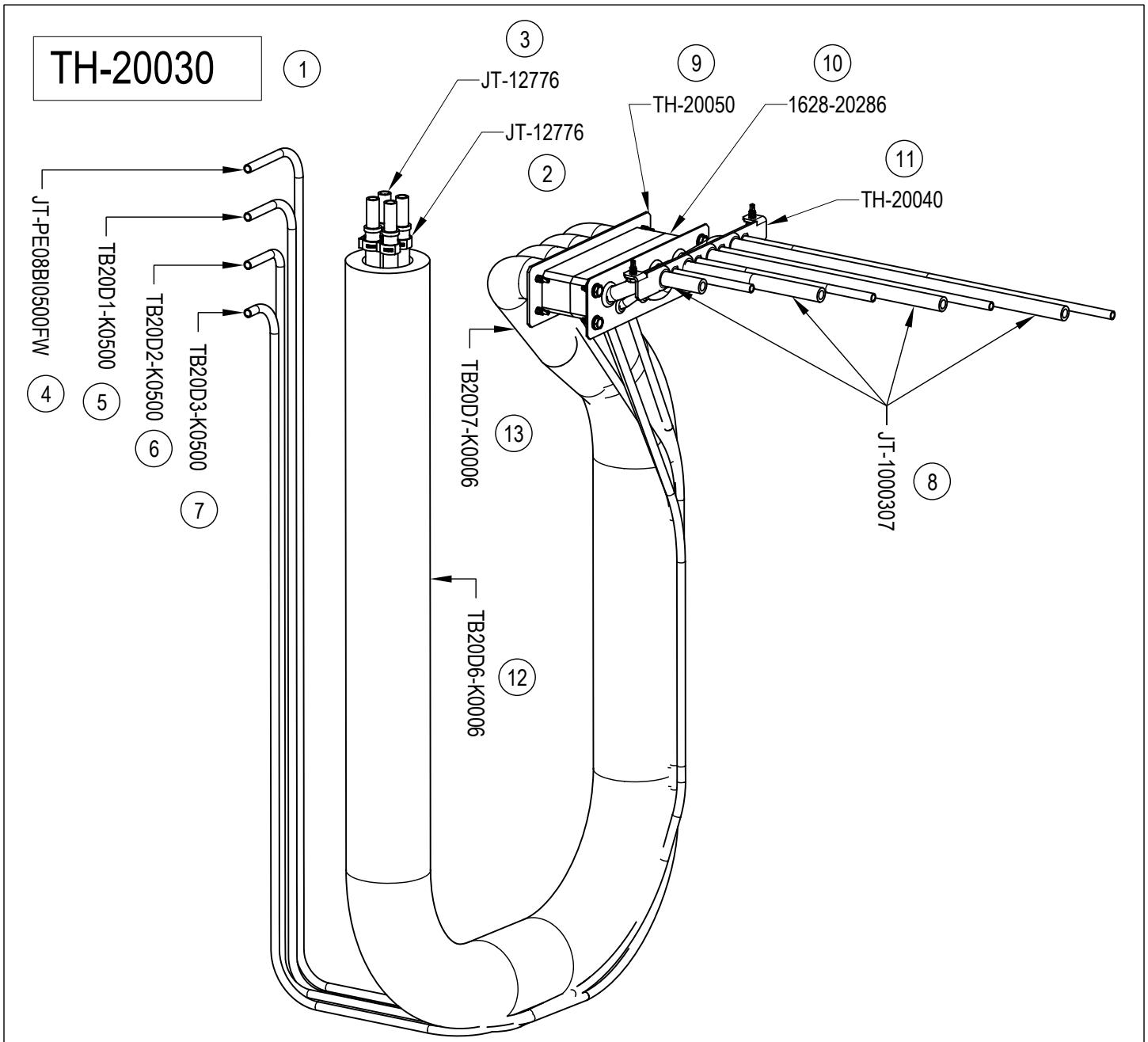

1	TH-20030	BUNDLE LINE, ASSY
2	JT-16700009	HOSE CLAMP, 15/32, 12.3 MM, SS
3	CD-FT-013	3/8" STEM X 1/4" BARB FITTING
4	JT-PE08BI0500FW	1/4" OD TUBING WHITE
5	TB20D1-K0500	1/4" OD TUBING RED
6	TB20D2-K0500	1/4" OD TUBING GREEN
7	TB20D3-K0500	1/4" OD TUBING BLUE
8	JT-1000307	TUBING BRAID 1/4
9	TH-20050	BULKHEAD ASSM - JT-NIT-RTD-4444
10	1628-20286	FOAM LEFT
11	TH-20040	TUBING BRACKET ASSM
12	TB20D6-K0006	INSULATION - 1-1/8 ID x 1/2 W X 6 FT L
13	TB20D7-K0006	INSULATION - 1/2 ID x 3/8 W, CUT TO 9"

* ITEMS IN PARENTHESIS AND ASTERISK ARE AS PART OF KIT ONLY

GAS JUMPER LINE, N1-N4, ASSY

TH-20061-4 (1)

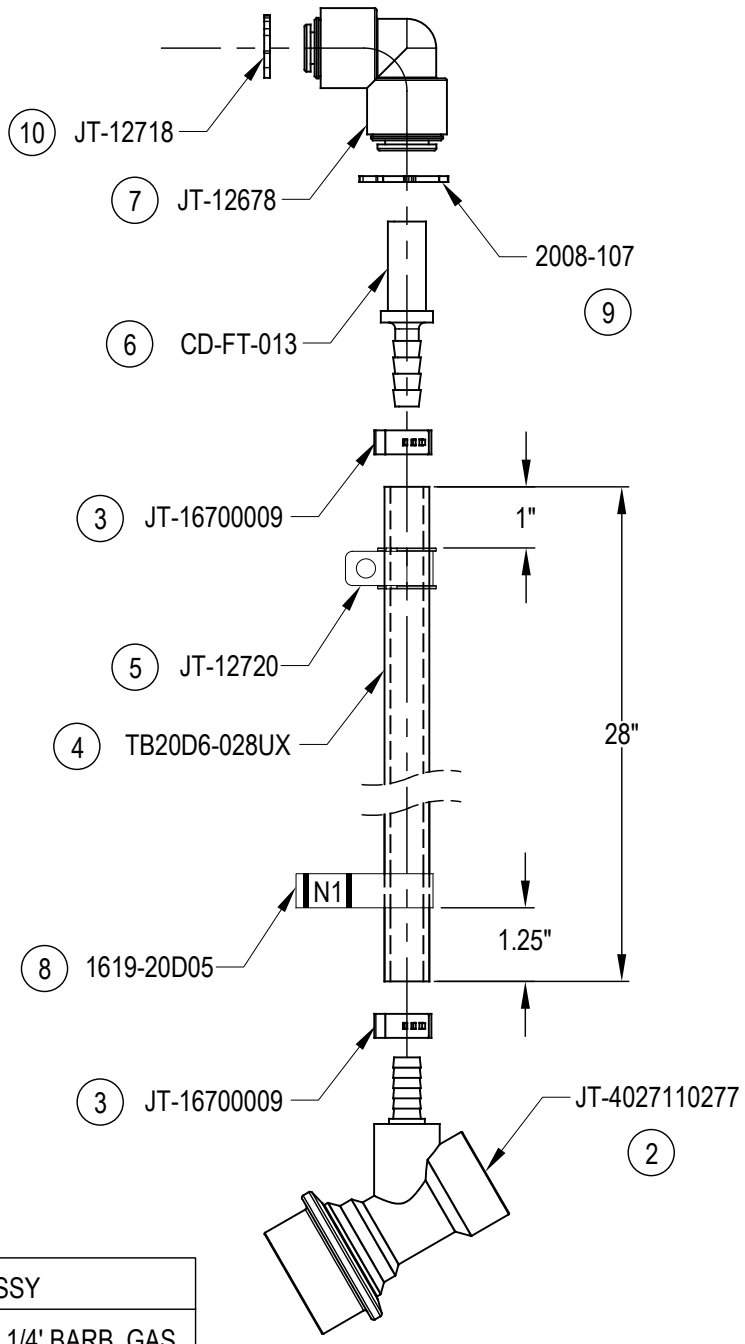

1	TH-20061-4	GAS DISCONNECT SUB-ASSY
2	JT-4027110277	BALL LOCK DISCONNECT, 1/4' BARB, GAS
3	JT-16700009	HOSE CLAMP, 15/32, 12.3 MM, SS
4	TB20D6-028UX	TUBING 1/4 X 7/16 TYGON" (JT-012187)
5	JT-12720	CLAMP CUSHION 3/8
6	CD-FT-013	BARB FITTING 3/8" STEM X 1/4"
7	JT-12678	REDUCE ELBOW, 3/8" X 1/4"
8	1619-20D05	LABEL N1, N2, N3, N4 FLAG LABEL
9	2008-107	LOCKING CLIP - 3/8", RED
10	JT-12718	LOCKING CLIP - 1/4", RED

* ITEMS IN PARENTHESIS AND ASTERISK ARE AS PART OF KIT ONLY

LIQUID JUMPER LINE, PRODUCT 1-4, ASSY

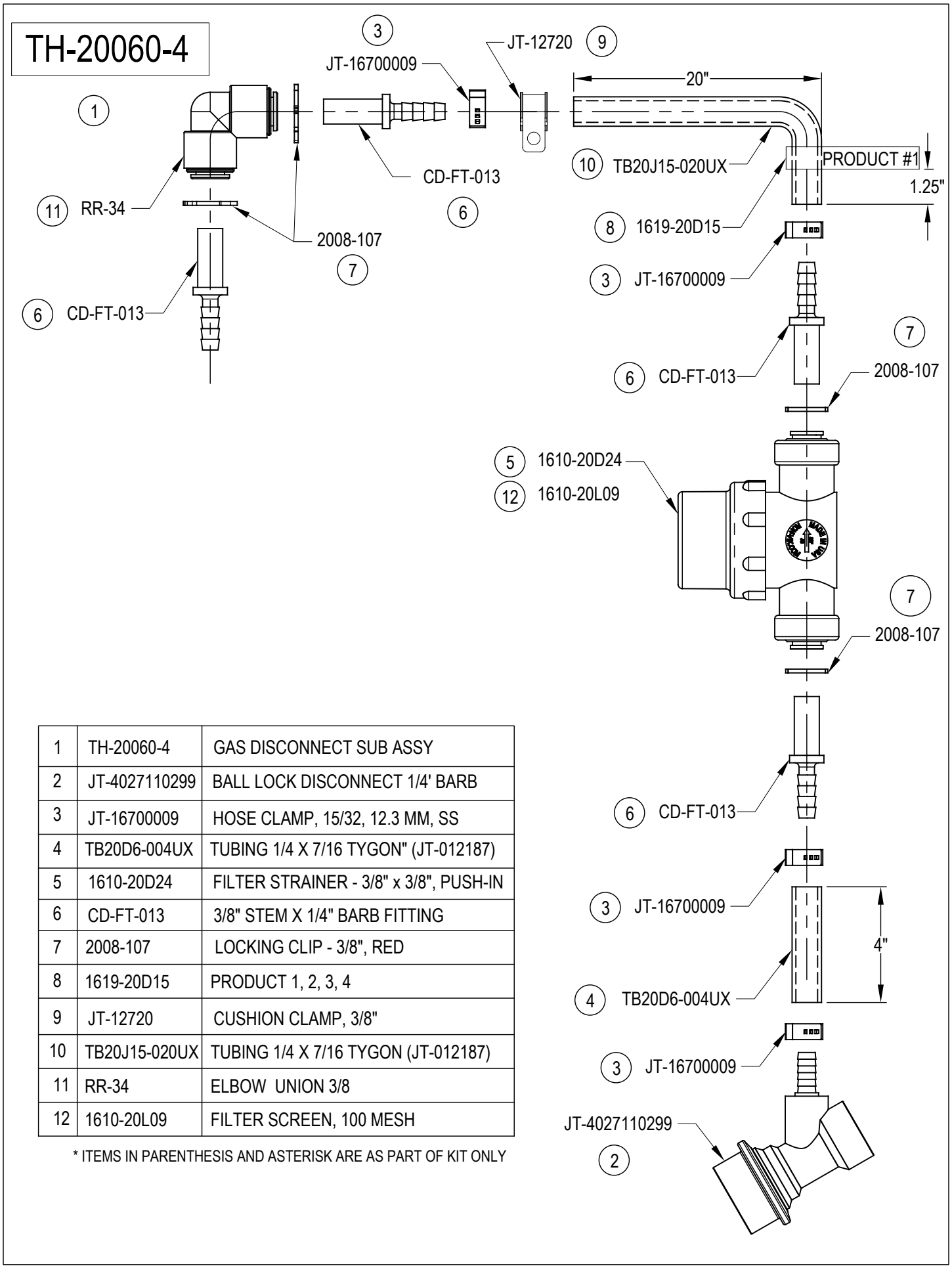

1	TH-20060-4	GAS DISCONNECT SUB ASSY
2	JT-4027110299	BALL LOCK DISCONNECT 1/4' BARB
3	JT-16700009	HOSE CLAMP, 15/32, 12.3 MM, SS
4	TB20D6-004UX	TUBING 1/4 X 7/16 TYGON" (JT-012187)
5	1610-20D24	FILTER STRAINER - 3/8" x 3/8", PUSH-IN
6	CD-FT-013	3/8" STEM X 1/4" BARB FITTING
7	2008-107	LOCKING CLIP - 3/8", RED
8	1619-20D15	PRODUCT 1, 2, 3, 4
9	JT-12720	CUSHION CLAMP, 3/8"
10	TB20J15-020UX	TUBING 1/4 X 7/16 TYGON (JT-012187)
11	RR-34	ELBOW UNION 3/8
12	1610-20L09	FILTER SCREEN, 100 MESH

* ITEMS IN PARENTHESIS AND ASTERISK ARE AS PART OF KIT ONLY

PRESSURE REGULATOR TUBING

TH-16500 (1)

1	TH-16500	PRESSURE REGULATOR TUBING ASSY
2	JT-R07200RNAA	REGULATOR, 1/4" NPT, 1-10 PSI
3	1618-20J15	GAUGE PRESSURE, 1-1/2" DIAL, 0-30 PSI
4	1635-20Y22	FITTING - SWIVEL TEE, 1/4 TUBE X 1/4 NPT
5	0303-6U25	PLUG - 1/4" STEM, ACETAL
6	JT-PE08BI0500FW	TUBING LLDPR, 1/4" OD WHITE
7	CD-FT-004	ELBOW 1/4 TUBE X 1/4 NPT
8	TB20D3-K0500	TUBING, LLDPE, 1/4" OD BLUE
9	TB20D2-K0500	TUBING, LLDPE, 1/4" OD GREEN
10	TB20D1-K0500	TUBING, LLDPE, 1/4" OD RED

* ITEMS IN PARENTHESIS AND ASTERISK ARE AS PART OF KIT ONLY

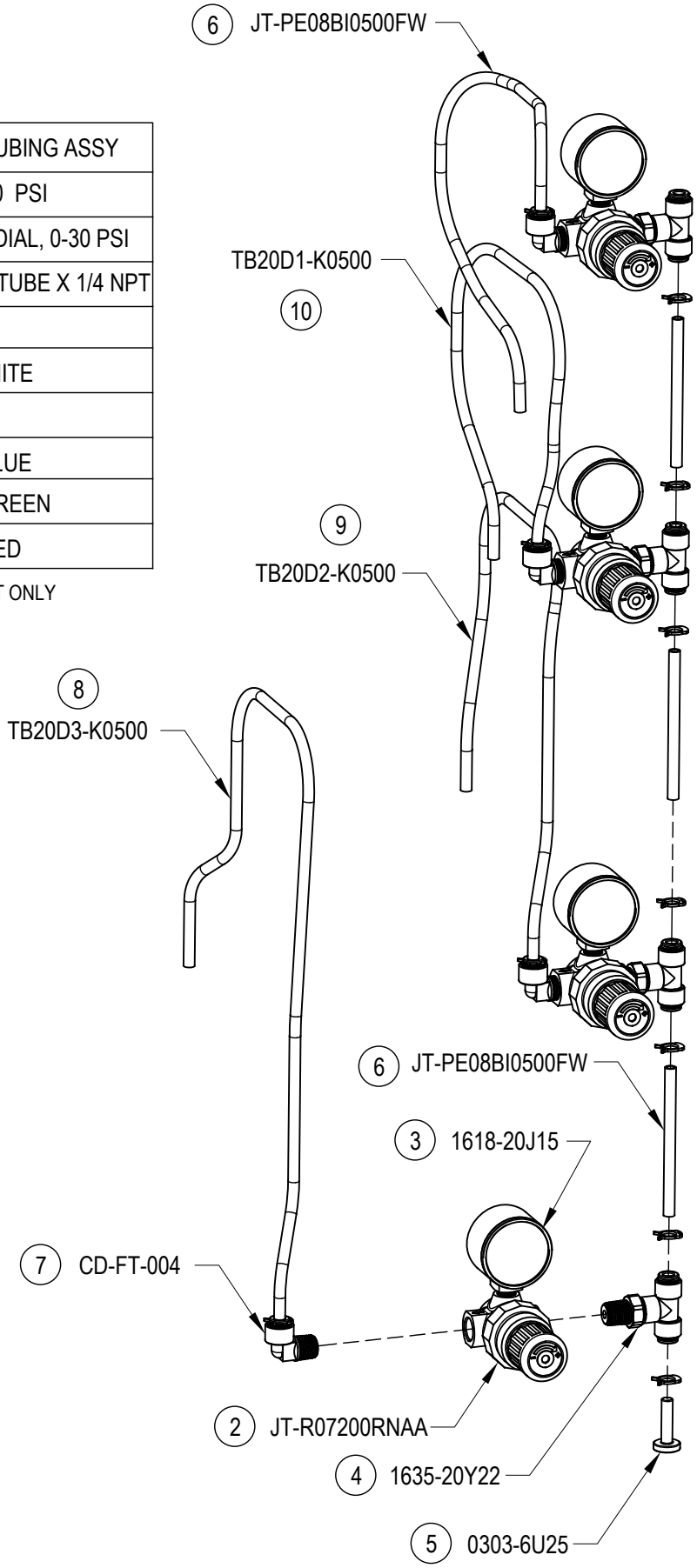

COMPACT NITRO CLEANING KIT

TH-NIT-CK (1)

(2) KAY-5

1	TH-NIT-CK	COMPACT NITRO CLEANING KIT
2	KAY-5	KAY-5 SANITIZER PACKET, 1 OZ

* ITEMS IN PARENTHESIS AND ASTERISK ARE AS PART OF KIT ONLY

TH-16300 (4)

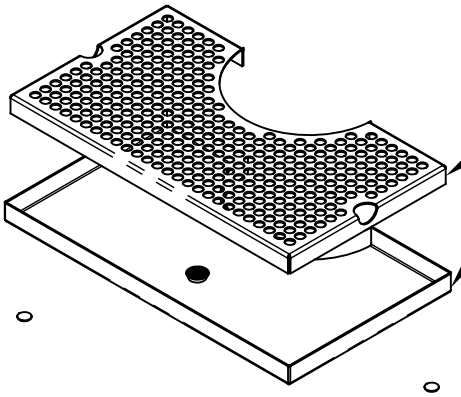

71-0015-00 (5)

4	TH-16300	DRIP TRAY
5	71-0015-00	DRIP TRAY - 14"L X 8"W
6	1614-20J14	BUMPER 1/2"

* ITEMS IN PARENTHESIS AND ASTERISK ARE AS PART OF KIT ONLY

1614-20J14 (6)

JT-12549 (8)

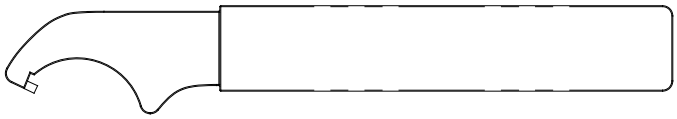

8	JT-12549	FAUCET SPANNER WRENCH

* ITEMS IN PARENTHESIS AND ASTERISK ARE AS PART OF KIT ONLY

RELAY / RESISTOR 100K 2W ,ASSY

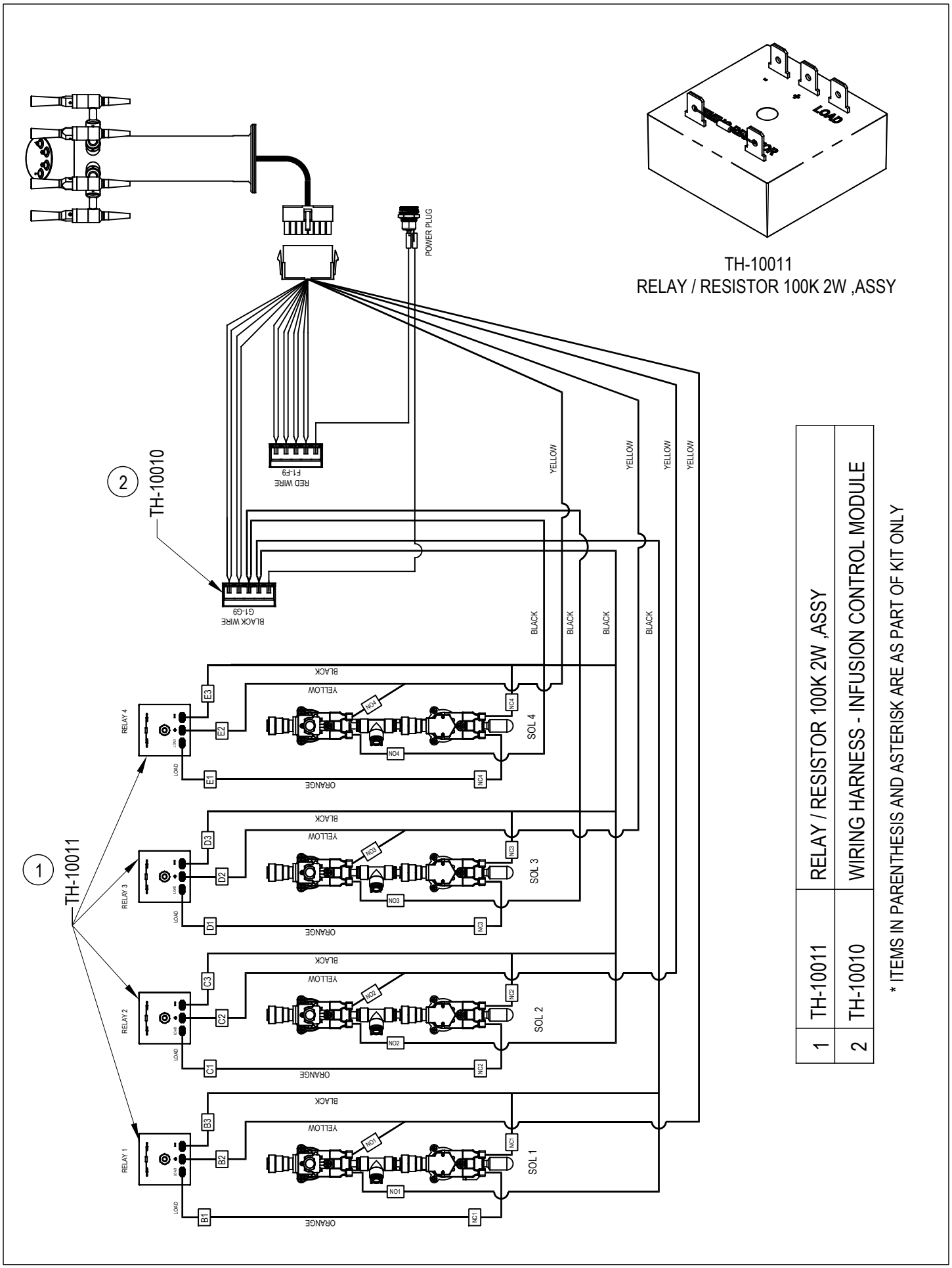

1	TH-10011	RELAY / RESISTOR 100K 2W ,ASSY
2	TH-10010	WIRING HARNESS - INFUSION CONTROL MODULE

* ITEMS IN PARENTHESIS AND ASTERISK ARE AS PART OF KIT ONLY

JOE TAP CORD REPAIR KIT

JT-CC-RK (1)

1	JT-CC-RK	JOE TAP CORD CATCHER REPAIR KIT
2	JT-20000	DOOR 24"
3	JT-20001	DOOR GASKET
4	JT-12692(-KR,-KL)	DOOR STOP-ASSEMBLY KIT (RIGHT-HAND / LEFT-HAND)
5	JT-12613*	SCREW - HINGE DOOR STOPPER
6	JT-12616(-R, -L)	DOOR STOP-105 DEG, STD DOOR-MODIFIED WITHOUT STOPPER
7	JT-12692-RBHA, -LBHA	RHH/LHH BOTTOM HINGE
8	JT-12615-B	BOTTOM HINGE PIN
9	JT-12692-SH	SCREW-HINGE-FH
10	JT-12692 (RTH, -LTH)	RHH/LHH TOP HINGE-ASSEM
11	JT-12615	SCREW - DOOR HINGE PIN-TOP
12	JT-12780	BUSHING FOR UPPER HINGE PIN

* ITEMS IN PARENTHESIS AND ASTERISK ARE AS PART OF KIT ONLY

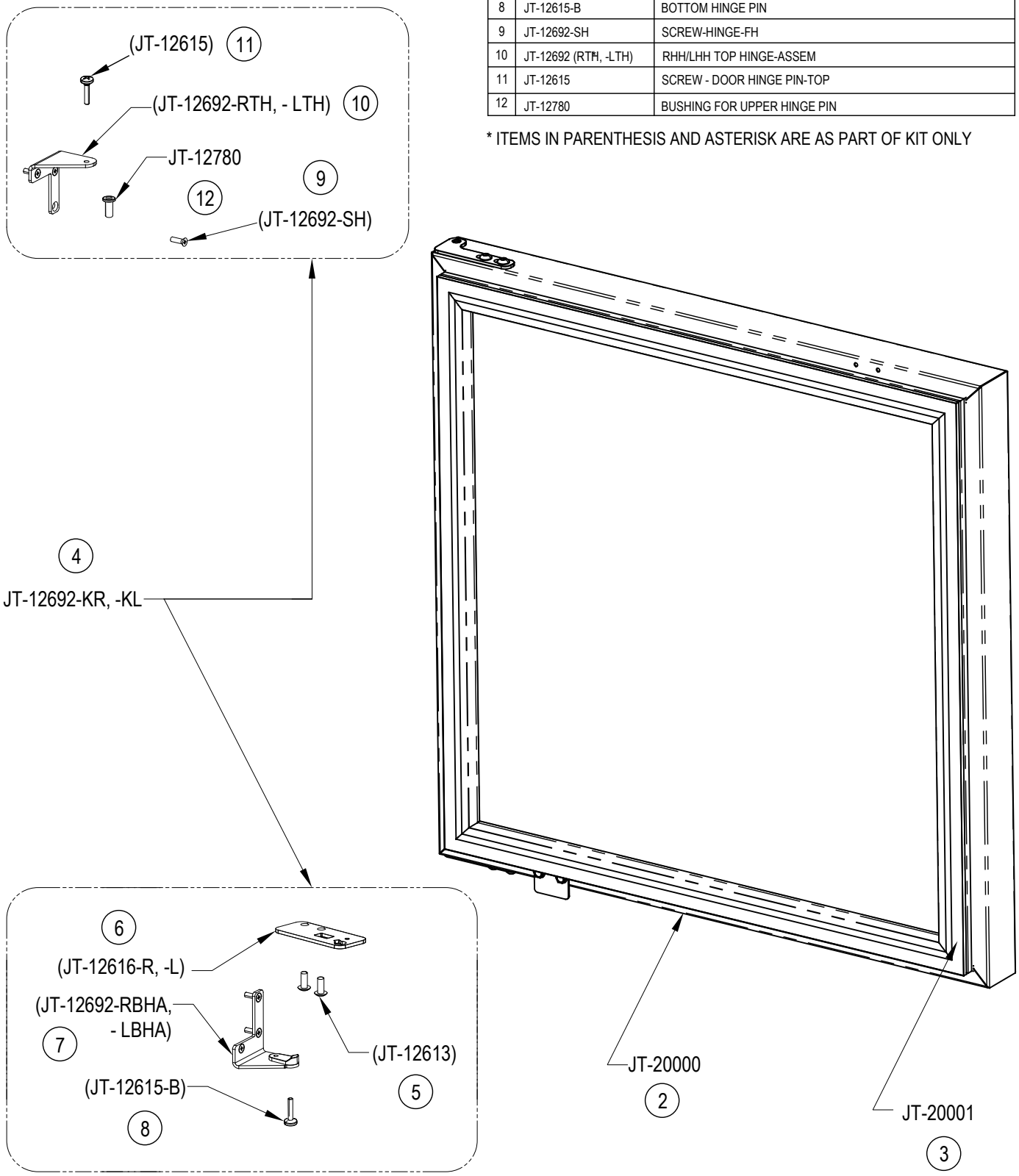

SOLENOID PANEL, ASSY

1	JT-12621K	UI BOARD REPLACEMENT KIT
2	JT-12610 *	UI OVERLAY
3	JT-12605 *	DISPLAY ASSEMBLY/FRONT CONTROLLER-UI BOARD
4	JT-12622 *	PLASTIC BRACKET/BRACKET-FRONT DISPLAY SECURE (UI Housing front)

* ITEMS IN PARENTHESIS AND ASTERISK ARE AS PART OF KIT ONLY

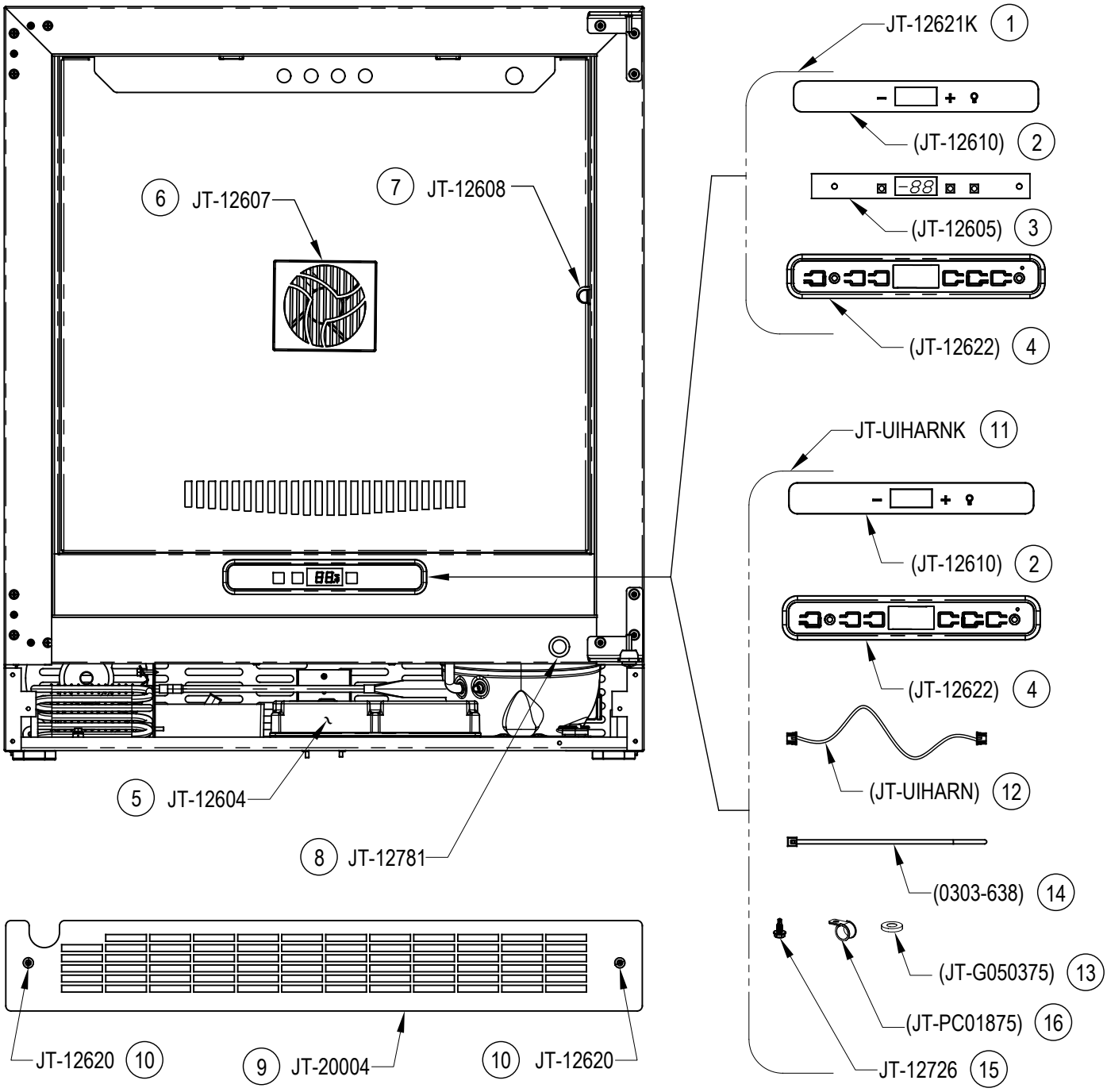

5	JT-12604	MAIN BOARD JADE515-SSXXA
6	JT-12607	FAN-EVAPORATOR, JOE TAP NITRO
7	JT-12608	THERMISTOR
8	JT-12781	PLUNGER SWITCH, DOOR
9	JT-20004	GRILL, FRONT-BOTTOM 24"
10	JT-12620	SCREWS, FRONT GRILL

* ITEMS IN PARENTHESIS AND ASTERISK ARE AS PART OF KIT ONLY

11	JT-UIHARNK	UI HARNESS REPLACEMENT KIT
12	JT-UIHARN *	DISPLAY WIRE
13	JT-G050375 *	GROMMET 1/2"HOLE 3/8"ID SBR
14	0303-638 *	CABLE TIE-6"
15	JT-12726	#10-16 X 1/2 LG, SCREW, SELF-TAPPING, HEX HEAD, SS
16	JT-PC01875 *	P-CLAMP - 3/16" ID

* ITEMS IN PARENTHESIS AND ASTERISK ARE AS PART OF KIT ONLY

CONDENSER FAN

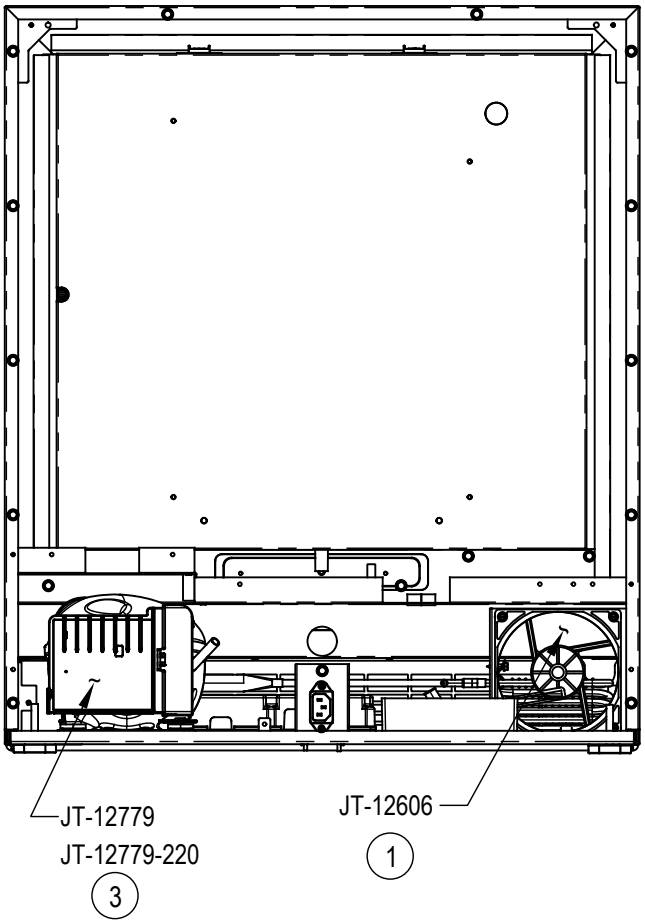

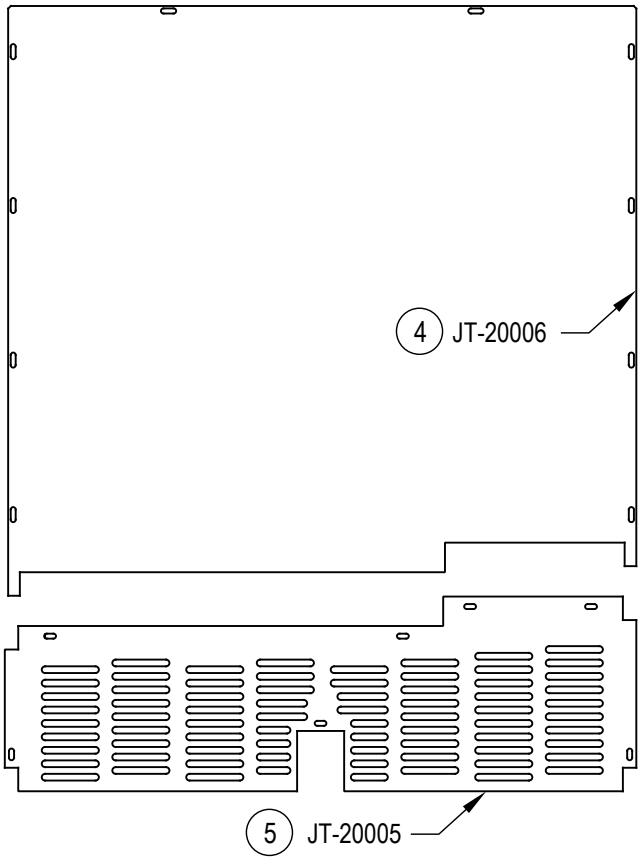

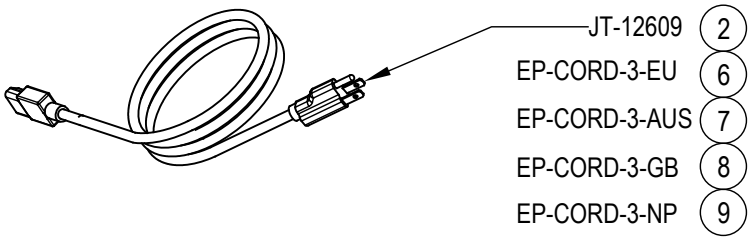

1	JT-12606	CONDENSER FAN
2	JT-12609	POWER CORD 120V
3	JT-12779 / JT-12779-220	INVERTER, 120V/230V
4	JT-20006	REAR COVER 24"
5	JT-20005	REAR GRILL 24"
6	EP-CORD-3-EU	POWER CORD, BRAZIL/EURO
7	EP-CORD-3-AUS	POWER CORD, AUSTRALIAN /CHINA
8	EP-CORD-3-GB	POWER CORD, GB 2.5 METER
9	EP-CORD-3-NP	POWER CORD, CHILE

* ITEMS IN PARENTHESIS AND ASTERISK
ARE AS PART OF KIT ONLY

Commercial Kitchen Equipment Parts

Find more Joe Tap equipment resources at

parthubz.com/equipment/joe-tap

Need parts or service?

Call 833-700-8006

support@parthubz.com

parthubz.com