Commercial Kitchen Equipment Parts

MONTAGUE 115A

Montague 115A document

Provided by PartHubz

parthubz.com

833-700-8006 | support@parthubz.com

MONTAGUE

REFERENCE GUIDE

TABLE OF CONTENTS

Since 1857

LEGEND™ 1

Heavy Duty 136 Series Range Model — Range Top Configurations 1
Standard Ovens 2
Convection Ovens 3
124 Series Range with Ovens 4
24/7 Ovens 5
Bake and Roast Ovens 6
Extra Low Boy Stackable Ovens 6
Broiler Ovens 7
Cabinet Base 8-9
Modular Stand 10-11
Counter Top 12-13
Counter Add-a-Unit-Griddles/Frytops/Planchas 14
Deluxe Griddle 15
136 Series Options and Accessories 16-21
Salamander and Cheesemelter 22
Over fired Broilers 23
Over fired Broilers on Refrigerated Bases 24
Underfired Broilers 25-29
Charcoal Broiler 30
Fryers/Fryer Filter 31
Stock Pot Stoves 32
Pasta Cookers 32
Electric Induction Cooktop 33
Hearth Bake Pizza Ovens 34
Chinese Ranges 35
Range Match Wok 36
Glycol Ice and Heat Sauté Station 37
Induction Sauté Station 38
Refrigerated Chef Base 39
Freezer Chef Base 40
Glycol Refrigerated Chef Base 41
Glycol Drop-In Pan Chiller 42
Glycol Prep Pan and Batter Holding Tables 43
Glycol Pizza Prep Table 44
Glycol Sandwich Prep Table 45

VECTAIRE™ 46

R85 Apollo Gas Convection Ovens 47
HX Series Gas Convection Ovens 48
Gas Convection Ovens — Bakery Depth 49
SL Gas Convection Ovens 50
Electric Convection Ovens — Full and Half Size 51
Options and Accessories 52

CHECK YOUR ORDER ON-LINE IN 3 EASY STEPS

Since 1857

Go to www.MontagueCompany.com

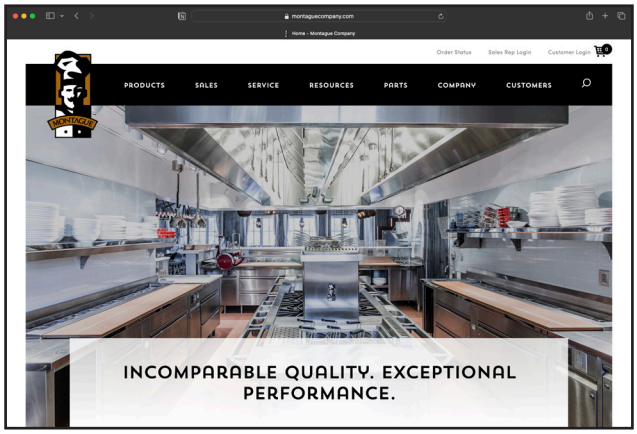

1 Select "Order Status" located in the top left corner of the website

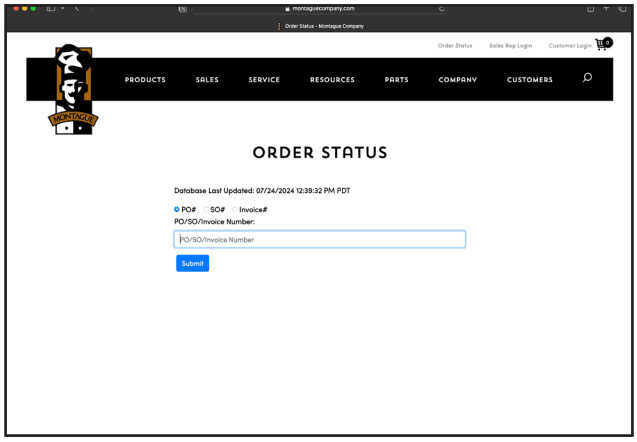

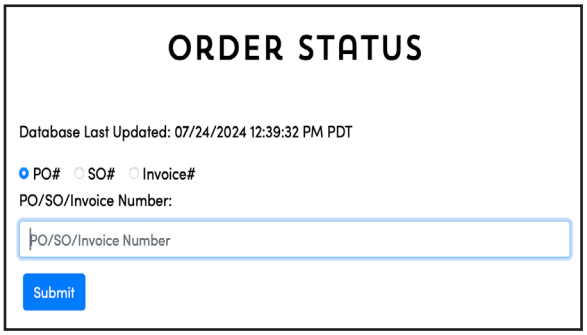

2 Enter your PO, SOE, or Invoice Number

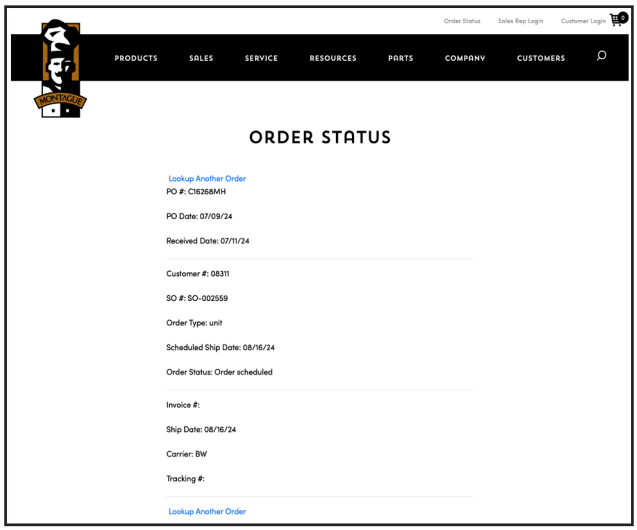

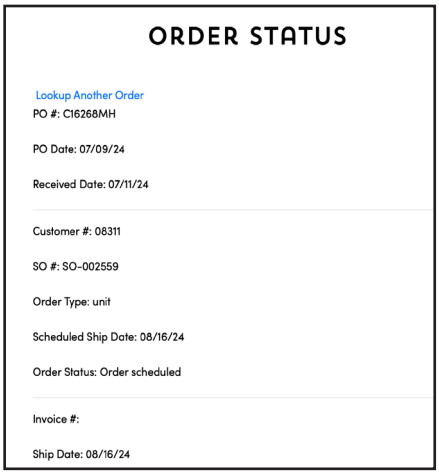

3 Find your Order Status and Tracking Information

BUILT TO LAST

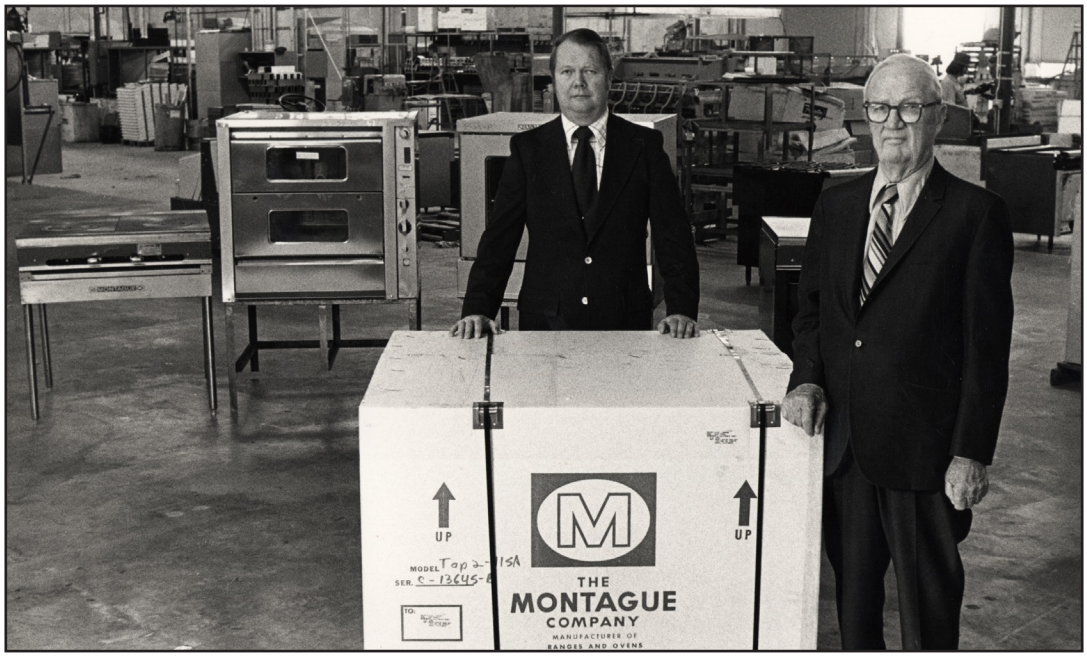

Over 160 Years of Quality

Montague's story started in the days of the California Gold Rush, and for over 160 years, we've been building equipment that's stood the test of time. From lasting through the Great Depression to supporting chefs across generations, our focus has always been on craftsmanship and reliability.

Montague offers one of the most comprehensive ranges of commercial cooking equipment in the industry, built to meet the needs of every kitchen. From our fully customizable Excalibur Island Suites, designed to be the centerpiece of any operation, to our reliable electric and gas ranges, we deliver solutions for every culinary challenge.

Our lineup extends to countertop and underfired broilers, perfect for precision grilling, and overfired broilers, known for their intense heat and searing performance. For baking and roasting, Montague's pizza ovens and convection ovens deliver consistent results with superior craftsmanship and performance. No matter the application, Montague provides durable, high-performing equipment designed to handle the demands of the modern kitchen.

Today, we're proud to be part of the Ali Group, and now Welbilt, two of the most respected names in the foodservice industry. With this partnership, we continue to design, engineer, and manufacture all our equipment in Hayward, California. What hasn't changed is our commitment to quality. Montague equipment has always been built to perform and built to last—and that's something that will never change.

EXCALIBUR/CRUSADER COOKING SUITES

Since 1857

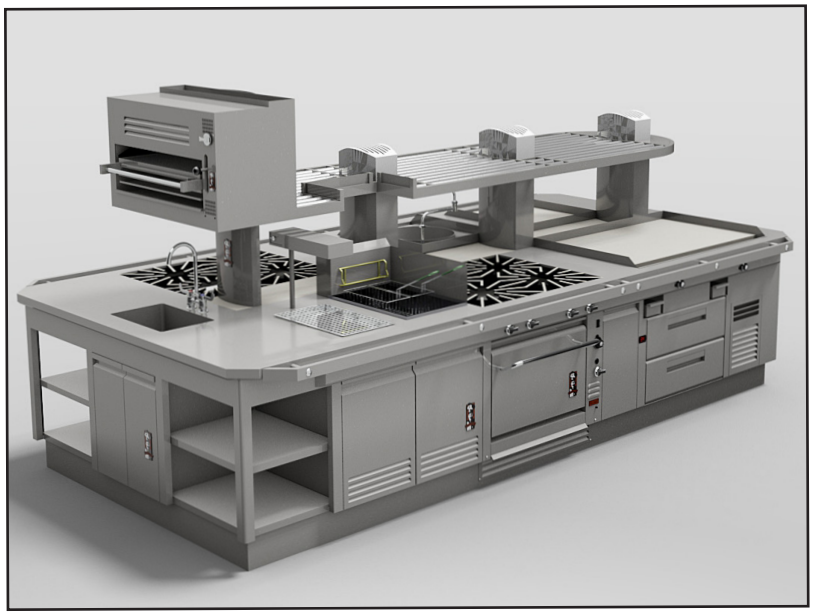

Excalibur & Crusader
Custom Cooking Suites

Cooking suites by design enable efficient use of space, cooking flow and function.

With a Montague Suite, you are getting the industry's premier Legend Series Equipment along with unique design choices and integration which only Montague provides:

- True concealed flues
- Pass-through ovens, and cheesemelters
- Heated cabinets and refrigeration
- Various trim and accent finishes including brass, copper, high-polish stainless steel

The entire suite is pre-assembled and tested at the factory to ensure quality fit and function of all components. Suites include on-site installation supervision from factory technicians. And, all Montague Suites are ETL designed certified.

Work with a professional foodservice consultant to develop your own design. Then, we'll engineer a custom-built island cooking suite to your exact specifications. For questions consult factory.

MONTAGUE LEGEND

Since 1857

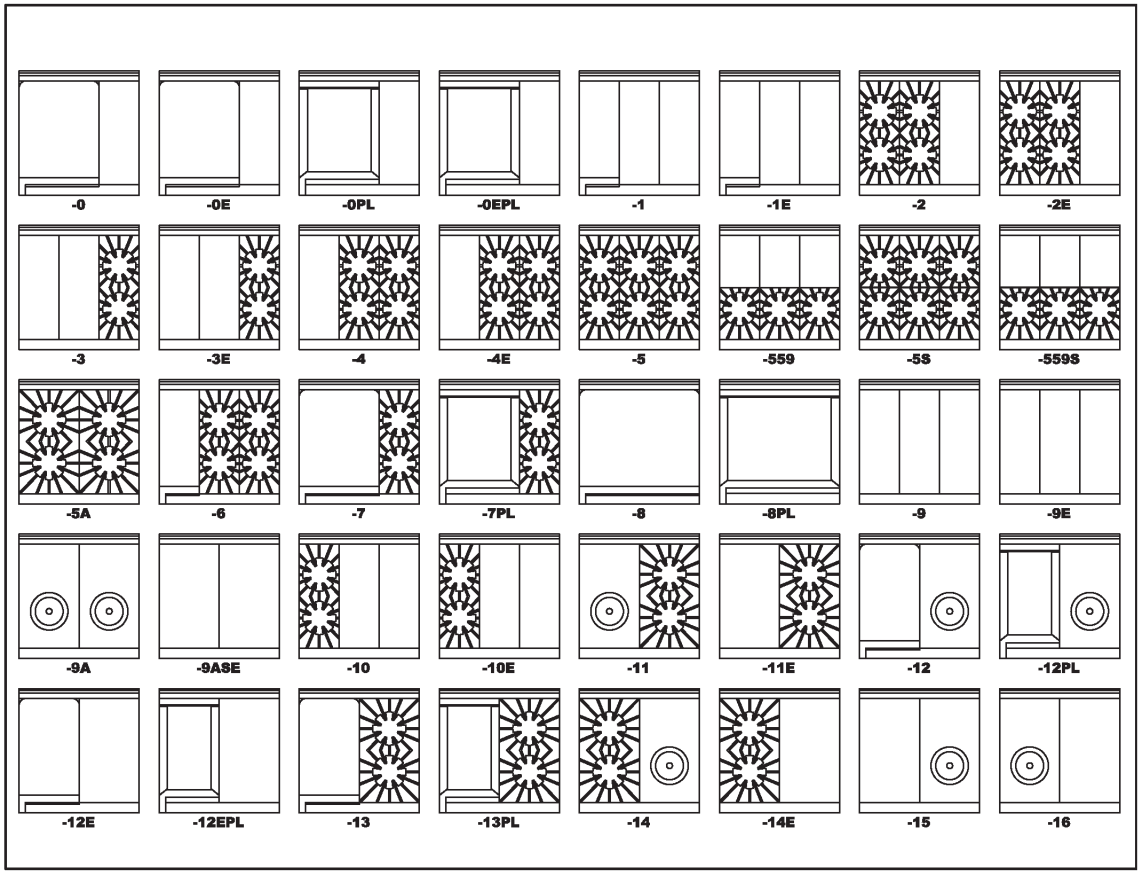

Classic Heavy Duty Ranges and Ovens

- More usable cooking surface
- Choice of over 40 cook tops
- Renowned counter-weighted oven door
- Front vented ovens with consistently reliable temperatures, a must for those perfect meals
- Welded angle iron frame construction
- Cast iron oven burners, and top grates
- Lift off cast iron top burners
- Controls in cool zone
- Sleek, streamlined flue risers and high shelves
- Available with casters, channel bases, quick-disconnects and restraining devices
- Hassle Free. Quick/Easy daily cleanup
- Purchase with confidence. Every model meticulously crafted, hand-assembled, test fired, calibrated at factory
- Unsurpassed service

Heavy Duty Range Tops

Model # -Suffix	Description
36" (914mm) Range Tops	**36"W x 36-5/8"D (914 x 930mm)**
-0E	One 24" (610mm) Fry top Left and One 12" (305mm) Even Heat Hot Top Right
-0EPL	One 24" (610mm) Plancha Left and One 12" (305mm) Even Heat Hot Top Right
-0G	One 24" (610mm) Fry top Left and One 12" (305mm) Gradient Heat Hot Top Right
-0GPL	One 24" (610mm) Plancha Left and One 12" (305mm) Gradient Heat Hot Top Right
-1E	One 12" (305mm) Fry top Left and Two 12" (305mm) Even Heat Hot Tops Right
-1G	One 12" (305mm) Fry top Left and Two 12" (305mm) Gradient Heat Hot Tops Right
-2E	Two 12" (305mm) Open Tops Left and One 12" (305mm) Even Heat Hot Top Right
-2G	Two 12" (305mm) Open Tops Left and One 12" (305mm) Gradient Heat Hot Top Right
-3E	Two 12" (305mm) Even Heat Hot Tops Left and One 12" (305mm) Open Top Right
-3G	Two 12" (305mm) Gradient Heat Hot Tops Left and One 12" (305mm) Open Top Right
-4E	One 12" (305m) Even Heat Hot Top Left and Two 12" (305mm) Open Tops Right
-4G	One 12" (305mm) Gradient Heat Hot Top Left and Two 12" (305mm) Open Tops Right
-5	Three 12" (305mm) Open Tops
-5S	Three 12" (305mm) Open Tops with Step-Up
-559	Three 12" (305mm) Combination Tops, Open Tops/Hot Tops
-559S	Three 12" (305mm) Combination Tops with Step-Up
-5A	Two 18" (457mm) Open Tops
-6	One 12" (305mm) Fry top Left and Two 12" (305mm) Open Tops Right
-7	One 24" (610mm) Fry top Left and One 12" (305mm) Open Top Right
-7PL	One 24" (610mm) Plancha Left and One 12" (305mm) Open Top Right
-8	One 36" (914mm) Fry top
-8PL	One 36" (914mm) Plancha
-9E	Three 12" (305mm) Even Heat Hot Tops
-9G	Three 12" (305mm) Gradient Heat Hot Tops
-9A	Two 18" (457mm) Hot Tops with Ring & Cover
-9ASE	Two 18" (457mm) Even Heat Hot Tops
-10E	One 12" (305mm) Open Top Left and Two 12" (305mm) Even Heat Hot Tops Right
-10G	One 12" (305mm) Open Top Left and Two 12" (305mm) Gradient Heat Hot Tops Right
-11	One 18" (457mm) Hot Top with Ring/Cover Left and One 18" (457mm) Open Top Right
-11E	One 18" (457mm) Even Heat Hot Top Left and One 18" (457mm) Open Top Right
-12	One 18" (457mm) Fry top Left and One 18" (457mm) Hot Top with Ring/Cover Right
-12EPL	One 18" (457mm) Plancha Left and One 18" (457mm) Even Heat Hot Top Right
-12E	One 18" (457mm) Fry top Left and One 18" (457mm) Even Heat Hot Top Right
-12GPL	One 18" (457mm) Plancha Left and One 18" (457mm) Hot Top with Ring/ Cover Right
-13	One 18" (457mm) Fry top Left and One 18" (457mm) Open Top Right
-13PL	One 18" (457mm) Plancha Left and One 18" (457mm) Open Top Right
-14	One 18" (457mm) Open Top Left and One 18" (457mm) Hot Top with Ring/Cover Right
-14E	One 18" (457mm) Open Top Left and One 18" (457mm) Even Heat Hot Top Right
-15	One 18" (457mm) Even Heat Hot Top Left and One 18" (457mm) Hot Top with Ring/Cover Right
-16	One 18" (457mm) Hot Top with Ring/Cover Left and One 18" (457mm) Even Heat Hot Top Right

Heavy Duty Range with Standard Oven

Standard Features:

- S/S Front and sides.
- Over 40 cook top choices.
- Even Heat Hot Tops. ("E" denotes Even Heat on Hot Tops)
- Gradient Heat Hot Tops. ("G" denotes Gradient Heat on Hot Tops)
- 3/4" (19mm) thick Fry tops, manual control.
- 6" (152 mm) legs, S/S.
- 4" (102mm) high Flue riser, S/S.
- Porcelainized oven interior: 26-5/8"W x 28-1/4"D x 15"H
- One rack & 4-position rack guides.
- 1-1/4" (32mm) front manifold with one-half union on each end provided for battery connection. (Gas pressure regulator properly sized for battery must be provided by the installer.)
- 30,000 BTU/hr Open Burners.
- Optional Thermostats on Griddles. (add 5,000 BTU's per Griddle Burner)

136-5S

Model #	Description	BTU's /Hr.	Ship Wt. (lbs.)
136 Range with Standard Oven		**36"W x 37-1/4"D (914 x 946mm)**	
136-0E	1-24" Frytop (L), 1-12" Hot Top (R)	105,000	800
136-0EPL	1-24" Plancha (L), 1-12" Even Heat Top (R)	90,000	800
136-0G	1-24" Frytop (L), 1-12" Gradient Heat Top (R)	103,500	800
136-0GPL	1-24" Plancha (L), 1-12" Gradient Heat Top (R)	88,500	800
136-1E	1-12" Fry top (L), 2-12" Hot Tops (R)	95,000	770
136-1G	1-12" Fry top (L), 2-12" Gradient Heat Tops (R)	92,000	770
136-2E	2-12" Open Tops (L), 1-12" Hot Top (R)	180,000	668
136-2G	2-12" Open Tops (L), 1-12" Gradient Heat Tops (R)	178,500	668
136-3E	2-12" Hot Tops (L), 1-12" Open Top (R) (2 OB)	140,000	674
136-3G	2-12" Gradient Heat Tops (L), 1-12" Open Top (R) (2 OB)	137,000	674
136-4E	1-12" Hot Top (L), 2-12" Open Tops (R) (4 OB)	180,000	659
136-4G	1-12" Gradient Heat Tops (L), 2-12" Open Tops (R) (4 OB)	178,500	659
136-5	3-12" Open Tops (6 OB)	220,000	636
136-5S	3-12" Open Tops with Step-Up (6 OB)	190,000	636
136-5A	2-18" Open Tops (4 OB)	160,000	616
136-559	3-12" Combi Tops, Open Tops/Hot Tops	175,000	660
136-559S	3-12" Combi Tops with Step-Up	175,000	660
136-6	1-12" Fry top (L), 2-12" Open Tops (R) (4 OB)	175,000	694
136-7	1-24" Fry top (L), 1-12" Open Top (R) (2 OB)	145,000	736
136-7PL	1-24" Plancha (L), 1-12" Open Top (R) (2 OB)	130,000	736
136-8	1-36" Fry top, 3/4" Thick, Manual Control	100,000	746
136-8PL	1-36" Plancha, 3/4" Thick, Manual Control	85,000	746
136-9E	3-12" Hot Tops	100,000	668
136-9G	3-12" Gradient Heat Tops	95,500	668
136-9A	2-18" Hot Tops with Ring & Cover	110,000	716
136-9ASE	2-18" Hot Tops with Even Heat Burners	120,000	674
136-10E	1-12" Open Top (L), 2-12" Hot Tops (R) (2 OB)	140,000	668
136-10G	1-12" Open Top (L), 2-12" Gradient Heat Tops (R) (2 OB)	137,000	668
136-11	1-18" Ring/Cover Top (L), 1-18" Open Top (R) (2 OB)	135,000	645
136-11E	1-18" Hot Top (L), 1-18" Open Top (R) (2 OB)	140,000	645
136-12	1-18" Fry top (L), 1-18" Ring/Cover Top (R)	105,000	710
136-12PL	1-18" Plancha (L), 1-18" Ring/Cover Top (R)	90,000	710
136-12E	1-18" Fry top (L), 1-18" Hot Top (R)	110,000	710
136-12EPL	1-18" Plancha (L), 1-18" Hot Top (R)	95,000	710
136-13	1-18" Fry top (L), 1-18" Open Top (R) (2 OB)	130,000	710
136-13PL	1-18" Plancha (L), 1-18" Open Top (R) (2 OB)	115,000	710
136-14	1-18" Open Top (L), 1-18" Ring/Cover Top (R) (2 OB)	135,000	645
136-14E	1-18" Open Top (L), 1-18" Hot Top (R) 2OB	140,000	645
136-15	1-18" Hot Top (L), 1-18" Ring/Cover Top (R)	115,000	645
136-16	1-18" Ring/Cover Top (L), 1-18" Hot Top (R)	115,000	645

Heavy Duty Range with Convection Oven

Standard Features:

- S/S Front and sides.
- Over 40 cook top choices.
- Even Heat Hot Tops. ("E" denotes Even Heat on Hot Tops)
- Gradient Heat Hot Tops. ("G" denotes Gradient Heat on Hot Tops)
- 3/4" (19mm) thick Frytops, manual control.
- 6" (152mm) legs, S/S. 4" (102mm) high flue riser, S/S.
- Porcelainized oven interior: 26-5/8"W x 22-1/4"D x 15"H
- Three racks & 5-position rack guides.
- 1-1/4" (32mm) front manifold with one-half union on each end provided for battery connection. (Gas pressure regulator properly sized for battery must be provided by the installer.)
- 30,000 BTU/hr Open Burners.
- Optional Thermostats on Griddles. (add 5,000 BTU's per Griddle Burner)
- 120VAC/60hz/1Ph.

136-9A Shown with optional casters

Model #	Description	BTU's /Hr.	Ship Wt. (lbs.)
V136 Range with Convection Oven		**36"W x 37-1/4"D (914 x 946mm)**	
V136-0E	1-24" Fry top (L), 1-12" Hot Top (R)	110,000	868
V136-0EPL	1-24" Plancha (L), 1-12" Even Heat Top (R)	95,000	868
V136-0G	1-24" Fry top (L), 1-12" Gradient Heat Top (R)	108,500	868
V136-0GPL	1-24" Plancha (L), 1-12" Gradient Heat Top (R)	93,500	868
V136-1E	1-12" Fry top (L), 2-12" Hot Tops (R)	100,000	835
V136-1G	1-12" Fry top (L), 2-12" Gradient Heat Tops (R)	97,000	835
V136-2E	2-12" Open Tops (L), 1-12" Hot Top (R)	185,000	731
V136-2G	2-12" Open Tops (L), 1-12" Gradient Heat Top (R)	183,500	731
V136-3E	2-12" Hot Tops (L), 1-12" Open Top (R) (2 OB)	145,000	769
V136-3G	2-12" Gradient Heat Tops (L), 1-12" Open Top (R) (2 OB)	142,000	769
V136-4E	1-12" Hot Top (L), 2-12" Open Tops (R) (4 OB)	185,000	720
V136-4G	1-12" Gradient Hot Top (L), 2-12" Open Tops (R) (4 OB)	183,500	720
V136-5	3-12" Open Tops (6 OB)	225,000	710
V136-5S	3-12" Open Tops with Step-Up (6 OB)	195,000	710
V136-5A	2-18" Open Tops (4 OB)	165,000	685
V136-559	3-12" Combi Tops, Open Tops/Hot Tops	180,000	725
V136-559S	3-12" Combi Tops with Step-Up	180,000	660
V136-6	1-12" Fry top (L), 2-12" Open Tops (R) (4 OB)	180,000	760
V136-7	1-24" Fry top (L), 1-12" Open Top (R) (2 OB)	150,000	785
V136-7PL	1-24" Plancha (L), 1-12" Open Top (R) (2 OB)	135,000	785
V136-8	1-36" Fry top, 3/4" Thick, Manual Control	105,000	825
V136-8PL	1-36" Plancha, 3/4" Thick, Manual Control	90,000	825
V136-9E	3-12" Hot Tops	105,000	745
V136-9G	3-12" Gradient Heat Tops	100,500	745
V136-9A	2-18" Hot Tops with Ring & Cover	115,000	780
V136-9ASE	2-18" Hot Tops with Even Heat Burners	125,000	715
V136-10E	1-12" Open Top (L), 2-12" Hot Tops (R) (2 OB)	145,000	735
V136-10G	1-12" Open Top (L), 2-12" Gradient Heat Tops (R) (2 OB)	142,000	735
V136-11	1-18" Ring/Cover Top (L), 1-18" Open Top (R) (2 OB)	140,000	715
V136-11E	1-18" Hot Top (L), 1-18" Open Top (R) (2 OB)	145,000	715
V136-12	1-18" Fry top (L), 1-18" Ring/Cover Top (R)	110,000	780
V136-12PL	1-18" Plancha (L), 1-18" Ring/Cover Top (R)	95,000	780
V136-12E	1-18" Fry top (L), 1-18" Hot Top (R)	115,000	780
V136-12EPL	1-18" Plancha (L), 1-18" Hot Top (R)	100,000	780
V136-13	1-18" Fry top (L), 1-18" Open Top (R) (2 OB)	135,000	780
V136-13PL	1-18" Plancha (L), 1-18" Open Top (R) (2 OB)	120,000	780
V136-14	1-18" Open Top (L), 1-18" Ring/Cover Top (R) (2 OB)	140,000	715
V136-14E	1-18" Open Top (L), 1-18" Hot Top (R) (2 OB)	145,000	715
V136-15	1-18" Hot Top (L), 1-18" Ring/Cover Top (R)	120,000	765
V136-16	1-18" Ring/Cover Top (L), 1-18" Hot Top (R)	120,000	765

Heavy Duty 24" Range with Oven

Standard Features:

- S/S Front and sides.
- 1-1/4" Front manifold provided with 1/2 union on each end for battery connection
- Front venting oven
- 20,000 BTU/Hr. cast iron burner (oven)
- Oven door counter balanced without use of springs
- Porcelain steel oven interior
- One rack & 4-position rack guides
- Oven dimensions: 16-1/4"W x 28-1/4"D x 14-3/4"H

124-5

Model #	Description	BTU's /Hr.	Ship Wt. (lbs.)
Legend Range Match		24"W x 37-1/4"D (635 x 946mm)	
124-5	(4) 12" OB	140,000	440
124-559	(2) -59 Tops	110,000	470
124-5S	(2) 12-12" Open Burners with Step-Up (4 OB)	120,000	470
124-8T	(1) 24" Fry top with Thermostat	80,000	490
124-S	(1) 24" S/S Work Top	20,000	375

Note: Optional 1" rear gas will be located on the right side.

HEAVY DUTY FIRE POWER IN A SMALL FOOTPRINT. AVAILABLE AS A STAND ALONE UNIT, OR INTEGRATED WITH OTHER MODELS FOR A CUSTOM SUITE.

Built for those operations that run 24/7 and require high performance, extra durability and easy cleaning. We start with our standard 136 Heavy Duty Features, then added additional items in 304 stainless steel, and included our easy cleaning features.

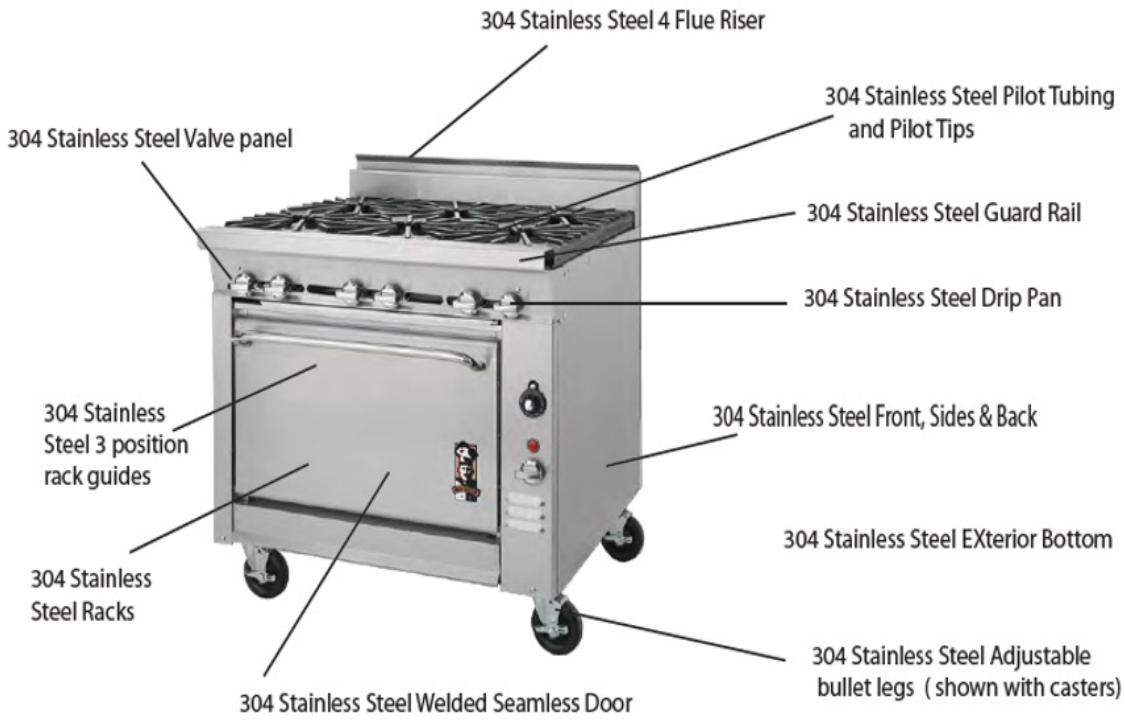

Easy Cleaning Features:

- Removable lift-off Burners and Venturis.

- Lift-Out 304 SS Drip Pans with integrated handles for easy handling and component positioning.

- Pilots with stainless steel tubing are concealed beneath easily removable shields. Components are protected from grease and over-spill for long lasting performance.

Model #	Description	BTU's /Hr.	Ship Wt. (lbs.)
24/7 Range with Oven		**36"W x 37-1/4"D (914 x 946mm)**	
136-5X	3- 12" Open Tops (6 OB) with Std. Oven	220,000	636
136-5AX	2-18" Open Tops (4 OB) with Std. Oven	160,000	636

Heavy Duty Bake & Roast Ovens

Standard Features:

- S/S Front and sides.
- 1-1/4" front manifold provided with 1/2 union on each end for battery connection.
- Front venting oven.
- Oven door counter balanced without use of springs.
- Porcelain steel oven interior.
- Oven Racks:
  Standard Oven: One rack & 4-position rack guides.
  Convection Oven: Three racks & 5-position rack guides.
- Oven Dimensions:
  Standard Oven: 26-5/8"W x 28-1/4"D x 15"H
  Convection Oven: 26-5/8"W x 22-1/4"D x 15"H

V236 (Shown with optional casters.)

Model #	Description	BTU's /Hr.	Ship Wt. (lbs.)
Bake and Roast Ovens		**36"W x 35-3/8"D (914 x 899mm)**	
136S	Single Standard Oven with S/S Work Top	40,000	500
236	Double Standard Oven	80,000	745
V136S	Single Convection Oven with S/S Work Top	45,000	575
V236	Double Convection Ovens	90,000	900

Heavy Duty Extra Low Boy Ovens

Standard Features:

- S/S Front and sides.
- 6" (152mm) S/S adjustable legs.

Oven:

- Front venting oven.
- Porcelainized oven interior: 26-5/8"W x 28-1/4"D x 10"H
- One 32,000 BTU/Hr. cast iron oven burner.
- Oven door counter balanced without use of springs.
- Thermostat dial with temperature range from Low to 500°F (260°C).

336XLB shown with optional casters

Model #	Description	BTU's /Hr.	Ship Wt. (lbs.)
Legend XLB Stackable		**36"W x 33-3/4"D (914 x 857mm)**	
136XLB	Single XLB Oven with S/S Top	32,000	450
236XLB	Double Stacked XLB Ovens with S/S Top	64,000	800
336XLB	Triple Stacked XLB Ovens with S/S Top	96,000	1,150

Heavy Duty Extra Low Boy With Radiant Broiler 36" Working Height

Standard Features:

- S/S Front and sides.
- 6" (152mm) S/S adjustable legs.

Oven:

- Porcelainized oven interior: 26-5/8"W x 28-1/4"D x 10"H
- One 32,000 BTU/Hr. cast iron oven burner.
- Oven door counter balanced without use of springs.
- Thermostat dial with temperature range from Low to 500°F (260°C).

Broiler:

- 1-1/4" front manifold with one-half union on each end provided for battery connection. (Gas pressure regulator properly sized for battery must be provided by the installer.)
- S/S tube burners each rated @ 19,000 BTU/Hr.
- Removable S/S self-cleaning radiants.
- Reversible cast iron top grates.
- 2-position grid frame.
- 1" (25mm) flue riser.

136XLB/UFLC-36R

Model #	Description	BTU's /Hr.	Ship Wt. (lbs.)
Legend Range Match		**36"W x 37-1/4"D (914 x 946mm)**	
136XLB/UFLC-36R	36"W (1) Standard Oven/Charbroiler	146,000	750

Heavy Duty Low Boy Ovens with Radiant Broiler

Standard Features:

- S/S Front and sides.
- 1" (25mm) rear gas connection with gas pressure provided.
- 6" (152mm) S/S adjustable legs.

Broiler:

- S/S tube burners each rated @ 19,000 BTU/Hr.
- Removable S/S self-cleaning radiants.
- Reversible cast iron top grates.
- 2-position grid frame.
- 1" (25mm) flue riser.

Oven:

- Front venting oven, 26"W x 28"D x 15"H
- Porcelain steel oven interior.
- Oven doors counter balanced without use of springs.
- Thermostat dial with temperature range from Low to 500°F (260°C).

136LB/UFLC-36R
(Shown with optional casters)

Model #	Description	BTU's/Hr.	Ship Wt. (lbs.)
Standard 136LB with Oven		**36"W x 37-1/4"D (914 x 946mm)**	
136LB	Low Boy Standard Oven with S/S top	40,000	505
V136LB	Low Boy Convection Oven with S/S top	45,000	575
Standard 136LB Oven with Radiant Broiler		**36"W x 37-1/4"D (914 x 946mm)**	
136LB/UFLC-36R	36"W (1) Oven/Broiler	154,000	780
Convection V136LB Oven with Radiant Broiler		**36"W x 37-1/4"D (914 x 946mm)**	
V136LB/UFLC-36R	36"W (1) Oven/Broiler	159,000	855
V136LB/12LB/UFLC-48R	48"W (1) Oven with 12" Cabinet & (1) Broiler	197,000	950
V136LB/24LB/UFLC-60R	60"W (1) Oven with 24" Cabinet Base (1) Broiler	254,000	1,045

Heavy Duty Range with Cabinet Base

Standard Features:

- S/S Front and sides.
- Over 40 cooktop choices.
- Even Heat Hot Tops. ("E" denotes Even Heat on Hot Tops)
- Gradient Heat Hot Tops. ("G" denotes Gradient Heat on Hot Tops)
- 3/4" (19mm) thick Frytops, manual control.
- 6" (152mm) legs, S/S. 4" (102mm) high flue riser, S/S
- 1-1/4" (32mm) front manifold with one-half union on each end provided for battery connection. (Gas pressure regulator properly sized for battery must be provided by the installer.)
- 30,000 BTU/hr Open Burners.
- Optional Thermostats on Griddles. (add 5,000 BTU's per Griddle Burner)

36-5A

Model #	Description	BTU's /Hr.	Ship Wt. (lbs.)
36" (914mm) Range with Cabinet Base		**36"W x 37-1/4"D (914 x 946mm)**	
36-0E	1-24" Fry top (L), 1-12" Hot Top (R)	65,000	570
36-0EPL	1-24" Plancha (L), 1-12" Hot Top (R)	50,000	570
36-0G	1-24" Fry top (L), 1-12" Gradient Heat Top (R)	63,500	570
36-0GPL	1-24" Plancha (L), 1-12" Gradient Heat Top (R)	48,500	570
36-1E	1-12" Fry top (L), 2-12" Hot Tops (R)	55,000	540
36-1G	1-12" Fry top (L), 2-12" Gradient Heat Tops (R)	52,000	540
36-2E	2-12" Open Tops (L), 1-12" Hot Top (R)	140,000	490
36-2G	2-12" Open Tops (L), 1-12" Gradient Heat Top (R)	138,500	490
36-3E	2-12" Hot Tops (L), 1-12" Open Top (R) (2 OB)	100,000	500
36-3G	2-12" Gradient Heat Tops (L), 1-12" Open Top (R) (2 OB)	97,000	500
36-4E	1-12" Hot Top (L), 2-12" Open Tops (R) (4 OB)	140,000	480
36-4G	1-12" Gradient Heat Top (L), 2-12" Open Tops (R) (4 OB)	138,500	480
36-5	3-12" Open Tops (6 OB)	180,000	450
36-5S	3-12" Open Tops with Step-Up (6 OB)	150,000	450
36-5A	2-18" Open Tops (4 OB)	120,000	450
36-559	3-12" Combi Tops, Open Tops/Hot Tops	135,000	485
36-559S	3-12" Combi Tops with Step-Up	135,000	485
36-6	1-12" Fry top (L), 2-12" Open Tops (R) (4 OB)	135,000	520
36-7	1-24" Fry top (L), 1-12" Open Top (R) (2 OB)	105,000	550
36-7PL	1-24" Plancha (L), 1-12" Open Top (R) (2 OB)	90,000	550
36-8	1-36" Fry top, 3/4" Thick, Manual Control	60,000	575
36-8PL	1-36" Plancha, 3/4" Thick, Manual Control	45,000	575
36-9E	3-12" Hot Tops	60,000	520
36-9G	3-12" Gradient Heat Tops	55,500	520
36-9A	2-18" Hot Tops with Ring & Cover	70,000	530
36-9ASE	2-18" Hot Tops with Even Heat Burners	80,000	525
36-10E	1-12" Open Top (L), 2-12" Hot Tops (R) (2 OB)	100,000	500
36-10G	1-12" Open Top (L), 2-12" Gradient Heat Tops (R) (2 OB)	97,000	500
36-11	1-18" Ring/Cover Top (L), 1-18" Open Top (R) (2 OB)	95,000	490
36-11E	1-18" Hot Top (L), 1-18" Open Top (R) (2 OB)	100,000	490
36-12	1-18" Fry top (L), 1-18" Ring/Cover Top (R)	65,000	550
36-12PL	1-18" Plancha (L), 1-18" Ring/Cover Top (R)	50,000	550
36-12E	1-18" Fry top (L), 1-18" Hot Top (R)	70,000	550
36-12EPL	1-18" Plancha (L), 1-18" Hot Top (R)	55,000	550
36-13	1-18" Fry top (L), 1-18" Open Top (R) (2 OB)	90,000	550
36-13PL	1-18" Plancha (L), 1-18" Open Top (R) (2 OB)	75,000	550
36-14	1-18" Open Top (L), 1-18" Ring/Cover Top (R) (2 OB)	95,000	490
36-14E	1-18" Open Top (L), 1-18" Hot Top (R) (2 OB)	100,000	490
36-15	1-18" Hot Top (L), 1-18" Ring/Cover Top (R)	75,000	530
36-16	1-18" Ring/Cover Top (L), 1-18" Hot Top (R)	75,000	530
36-S	36" S/S Work Top	N/A	275

Note: *36" S/S Double Doors/Cabinet Base, add 20 lbs.

24-9E

24-S Stainless Steel Work Top

Model #	Description	BTU's /Hr.	Ship Wt. (lbs.)
24"W (610mm) Add-a-Units with Cabinet Base		**37-1/4"D (946mm)**	
24-5	2-12" Open Burners (4 OB)	120,000	350
24-5S	2-12" Open Burners with Step-Up (4 OB)	100,000	350
24-559	2-12" Open Tops/Hot Tops	90,000	375
24-559S	2-12" Open Tops/Hot Tops with Step-Up	90,000	375
24-6	1-12" Griddle (L), 1-12" Open Tops (R)	75,000	415
24-8	24" Fry top, 3/4" Thick, Manual Control	45,000	410
24-8PL	24" Plancha, 3/4" Thick, Manual Control	30,000	410
24-9E	2-12" Hot Tops, Even Heat	40,000	400
24-9G	2-12" Gradient Heat Tops	37,000	400
24-S	24" S/S Work Top	N/A	225
18"W (460mm) Add-a-Units with Cabinet Base		**37-1/4"D (946mm)**	
18-5A	1-18" Open Tops (2 OB)	60,000	325
18-8	1-18" Fry top, 3/4" Thick, Manual Control	30,000	450
18-8PL	1-18" Plancha, 3/4" Thick, Manual Control	15,000	450
18-9A	1-18" Hot Top, Ring & Cover	35,000	340
18-9ASE	1-18" Hot Top, Even Heat	40,000	340
18-S	18" S/S Work Top	N/A	200
12"W (305mm) Add-a-Units with Cabinet Base		**37-1/4"D (946mm)**	
12-5	1-12" Open Tops (2 OB)	60,000	215
12-5S	1-12" Open Tops with Step-Up (2 OB)	50,000	215
12-559	1-12" Open Top/Hot Top	45,000	230
12-559S	1-12" Open Top/Hot Top with Step-Up	45,000	230
12-8	1-12" Fry top, 3/4" Thick, Manual Control	15,000	250
12-9E	1-12" Hot Top, Even Heat	20,000	250
12-9G	1-12" Gradient Heat Top	18,500	250
12-S	12" S/S Work Top	N/A	150
6"W (152mm) Add-a-Units with Cabinet Base		**37-1/4"D (946mm)**	
6-S	6" S/S Work Top & Solid S/S Front Panel (Cannot be used as a stand alone unit.)	N/A	110

Heavy Duty Range — 12"-36" Counter Top

Standard Features:

- S/S Front and sides..
- Over 40 cooktop choices.
- Even Heat Hot Tops. ("E" denotes Even Heat on Hot Tops)
- Gradient Heat Hot Tops. ("G" denotes Gradient Heat on Hot Tops)
- 3/4" (19mm) thick Frytops, manual control.
- 4" (102mm) legs, S/S satin nickel finish.
- 4" (102mm) high flue riser, S/S.
- 1-1/4" (32mm) front manifold with one-half union on each end provided for battery connection. (Gas pressure regulator properly sized for battery must be provided by the installer.)
- 30,000 BTU/hr Open Burners.
- Optional Thermostats on Griddles. (add 5,000 BTU's per Griddle Burner)

C36-9A

Model #	Description	BTU's /Hr.	Ship Wt. (lbs.)
36"W (914mm) Counter Top Range		**37-1/4"D (946mm)**	
C36-0E	1-24" Fry top (L), 1-12" Hot Top (R)	65,000	420
C36-0EPL	1-24" Plancha (L), 1-12" Hot Top (R)	50,000	420
C36-0G	1-24" Fry top (L), 1-12" Gradient Heat Top (R)	63,500	420
C36-0GPL	1-24" Plancha (L), 1-12" Gradient Heat Top (R)	48,500	420
C36-1E	1-12" Fry top (L), 2-12" Hot Tops (R)	55,000	400
C36-1G	1-12" Fry top (L), 2-12" Gradient Heat Tops (R)	52,000	400
C36-2E	2-12" Open Tops (L), 1-12" Hot Top (R)	140,000	340
C36-2G	2-12" Open Tops (L), 1-12" Gradient Heat Top (R)	138,500	340
C36-3E	2-12" Hot Tops (L), 1-12" Open Top (R) (2 OB)	100,000	420
C36-3G	2-12" Gradient Heat Tops (L), 1-12" Open Top (R) (2 OB)	97,000	420
C36-4E	1-12" Hot Top (L), 2-12" Open Tops (R) (4 OB)	140,000	465
C36-4G	1-12" Gradient Heat Top (L), 2-12" Open Tops (R) (4 OB)	138,500	465
C36-5	3-12" Open Tops (6 OB)	180,000	350
C36-5S	3-12" Open Tops with Step-Up (6 OB)	150,000	350
C36-5A	2-18" Open Tops (4 OB)	120,000	325
C36-559	3-12" Combi Tops, Open Tops/Hot Tops	135,000	375
C36-559S	3-12" Combi Tops with Step-Up	135,000	375
C36-6	1-12" Fry top (L), 2-12" Open Tops (R) (4 OB)	135,000	380
C36-7	1-24" Fry top (L), 1-12" Open Top (R) (2 OB)	105,000	420
C36-7PL	1-24" Plancha (L), 1-12" Open Top (R) (2 OB)	90,000	420
C36-8	1-36" Fry top, 3/4" Thick, Manual Control	60,000	490
C36-8PL	1-36" Plancha, 3/4" Thick, Manual Control	45,000	490
C36-8T	1-36" Fry top, 3/4" Thick, 2 Thermostats	80,000	490
C36-9E	3-12" Hot Tops	60,000	425
C36-9G	3-12" Gradient Heat Tops	55,500	425
C36-9A	2-18" Hot Tops with Ring & Cover	70,000	390
C36-9ASE	2-18" Hot Tops with Even Heat Burners	80,000	390
C36-10E	1-12" Open Top (L), 2-12" Hot Tops (R) (2 OB)	100,000	420
C36-10G	1-12" Open Top (L), 2-12" Gradient Heat Tops (R) (2 OB)	97,000	420
C36-11	1-18" Ring/Cover Top (L), 1-18" Open Top (R) (2 OB)	95,000	360
C36-11E	1-18" Hot Top (L), 1-18" Open Top (R) (2 OB)	100,000	360
C36-12	1-18" Fry top (L), 1-18" Ring/Cover Top (R)	65,000	530
C36-12PL	1-18" Plancha (L), 1-18" Ring/Cover Top (R)	50,000	530
C36-12E	1-18" Fry top (L), 1-18" Hot Top (R)	70,000	530
C36-12EPL	1-18" Plancha (L), 1-18" Hot Top (R)	55,000	530
C36-13	1-18" Fry top (L), 1-18" Open Top (R) (2 OB)	90,000	565
C36-13PL	1-18" Plancha (L), 1-18" Open Top (R) (2 OB)	75,000	565
C36-14	1-18" Open Top(L), 1-18"Ring and Cover(R) (2OB)	95,000	360
C36-14E	1-18" Open Top (L), 1-18" Hot Top (R) 2OB	100,000	530
C36-15	1-18" Hot Top (L), 1-18" Ring/Cover Top (R)	75,000	400
C36-16	1-18" Ring/Cover Top (L), 1-18" Hot Top (R)	75,000	400
C36-S	1-36" S/S Work Top	N/A	250

C24-5

C18-5A

Model #	Description	Width	BTU's /Hr.	Ship Wt. (lbs.)
24"W (610mm) Counter Top Add-a-Units			**37-1/4"D (946mm)**	
C24-5	2-12" Open Tops (4 OB)	24"	120,000	310
C24-5S	2-12" Open Tops with Step-Up (4 OB)	24"	100,000	310
C24-559	2-12" Open/Hot Tops	24"	90,000	310
C24-559S	2-12" Open/Hot Tops with Step-Up	24"	90,000	310
C24-6	1-12" Griddle (L), 1-12" Open Tops(R)	24"	75,000	360
C24-8T	1-24" Griddle with 1 Therrmostat	24"	60,000	360
C24-8	1-24" Griddle, Manual	24"	45,000	360
C24-8PL	1-24" Plancha	24"	30,000	360
C24-9E	2-12" Hot Tops Even Heat	24"	40,000	285
C24-9G	2-12" Gradient Heat Tops	24"	37,000	285
C24-S	24" S/S Work Top	24"	N/A	170
18"W (460mm) Counter Top Add-a-Units			**37-1/4"D (946mm)**	
C18-5A	1-18" Open Tops (2 OB)	18"	60,000	210
C18-8T	1- 18" Griddle with 1 Thermostat	18"	40,000	285
C18-8	1- 18" Griddle, Manual	18"	30,000	285
C18-8PL	1-18" Plancha	18"	15,000	285
C18-9A	1-18" Hot Top Ring & Cover	18"	35,000	270
C18-9ASE	1-18" Hot Top — Even Heat	18"	40,000	240
C18-S	18" S/S Work Top	18"	N/A	150
12"W (305mm) Counter Top Add-a-Units			**37-1/4"D (946mm)**	
C12-5	1-12" Open Tops (2 OB)	12"	60,000	135
C12-5S	1-12" Open Tops with Step-Up (2 OB)	12"	50,000	135
C12-559	1-12" Open Top/Hot Top	12"	45,000	135
C12-559S	1-12" Open Top/Hot Top with Step-Up	12"	45,000	135
C12-8T	1-12" Griddle with 1 Thermostat	12"	20,000	230
C12-8	1-12" Griddle, Manual	12"	15,000	230
C12-9E	1-12" Hot Top, Even Heat	12"	20,000	160
C12-9G	1-12" Gradient Heat Top	12"	18,500	160
C12-S	12" S/S Work Top	12"	N/A	120

Heavy Duty Counter Top Griddles 48"-72"
Standard Features:

- S/S Front, sides, and bottom with aluminized back.
- 4" (103)hgh backsplash and tapered side splashes
- 3/4" thick preciscion-ground steel cook surface
- 5/8" wide front grease through pitched to the grease drop.
- Standard 15,000 BTU/hr burners or 20,000BTU/ hr with thermostat controls
- Adjusting bolts for hanging griddle plate forward pitch.
- Standard depth 28" fry top, optional 42" depth available
- 4" (152mm) legs, S/S.

C24-8T Counter Griddle

Model #	Width	No. Thermostats	BTU's /Hr.	Ship Wt. (lbs.)
48" to 72"W (305mm to 1929mm) Counter Add-a-Units — Griddles				**37-1/4"D (946mm)**
2/C24-8T	48"	2	120,000	690
2/C24-8	48"		90,000	690
2/C36-8T/C18-8T	54"	3	120,000	740
2/C36-8/C18-8	54"		90,000	740
2/C36-8T/C24-8T	60"	3	140,000	820
2/C36-8/C24-8	60"		105,000	820
2/C36-8T	72"	4	160,000	965
2/C36-8	72"		120,000	965

Notes: 3/4" (19mm) plate, manual control (standard). 4" (102mm) legs standard (set of 4) S/S.

MONTAGUE DELUXE GRIDDLE INTEGRATES PERFECTLY WITH OUR REFRIGERATION SYSTEMS FOR PRECISION AND PERFORMANCE RIGHT AT YOUR FINGERTIPS

Montague Deluxe Griddle — Thermostatically Controlled

Standard Features:

- S/S Front and sides with remaining exterior black
- 3-1/4" (83mm) wide S/S grease trough
- 4" (102mm) S/S splash
- 1" (25mm) thick ground & polished steel griddle plate
- 30,000 BTU/hr aluminized steel burners every 12" of width
- One snap-acting thermostat for each burner
- Automatic pilot ignition with 100% safety valve
- Large 4-1/2 quart grease drawer with baffle
- 6' 120V power cord with grounded 5-15 NEMA plug
- 4" (102mm) S/S legs with adjustable foot
- 3/4" NPT rear manifold with pressure regulator
- Full 24" (610mm) deep cooking surface

DG2448-SAT
(Shown with optional equipment stand and casters.)

Model #	Description	Cooking Surface	# of Burners/ # of T-stats	BTU's/Hr.	Ship Wt. (lbs.)
Deluxe Griddle					**31-1/2"D x 15-3/4"H (800 x 400mm)**
DG2424-SAT	24" (610mm) wide Griddle	24"W x 24"D	2/2	60,000	390
DG2436-SAT	36" (914mm) wide Griddle	36"W x 24"D	3/3	90,000	502
DG2448-SAT	48" (1219mm) wide Griddle	48"W x 24"D	4/4	120,000	680
DG2460-SAT	60" (1524mm) wide Griddle	60"W x 24"D	5/5	150,000	792
DG2472-SAT	72" (1829mm) wide Griddle	72"W x 24"D	6/6	180,000	904

Item	Notes		
Deluxe Griddle Options & Accessories			
SST	Solid State Thermostat. Price per T-stat. (see above for # T-stats req'd.)		
PR	Automatic Pilot Re-Light	24" (610mm)	1
		36" (914mm) & 48" (1219mm)	2
		60" (1524mm) & 72" (1829mm)	3
Griddle Stand All S/S with lower shelf. 34-1/2" Griddle working height.		24" (610mm)	35 lbs.
		36" (914mm)	45 lbs.
		48" (1219mm)	60 lbs.
		60" (1524mm)	80 lbs.
		72" (1829mm)	95 lbs.
Griddle Stand Casters 5" H.D. Stem Casters		set of 4 (24", 36", 48" models)	
		set of 6 (60", 72" models)	
Chrome Griddle Plate - Add (allow 6 weeks plus production schedule time.)		24" (610mm)	
		36" (914mm)	
		48" (1219mm)	
		60" (1524mm)	
		72" (1829mm)	
Plate Shelf Inset Pan Cutout and Cutting Board Available		Contact Factory	

Note: Deluxe griddles with 4" legs may sit on top of the RB Series (refrigerated bases) with a marine edge.

Unitized Construction — Per seam: $226

Including guard rail, front panel & capping strip S/S 3" (76mm) wide guard rail and front panel(s).
Note: Can not unitize fryers, spreaders, or under fired broilers. Guard rail for Fry top can not be unitized (needs to be open for grease receptacle.)

Item	Notes	
Miscellaneous		
Burners — 20,000 BTU's	Natural Gas / Propane Gas	
Cast Iron Oven Bottoms	In lieu of steel; 2 pieces, (N/A on V136 and 124 Series)	
Casters — Ranges	(Set of 4) 5" Wheel; 6" Height	
Caster Channel Frame (Required for units 48" up to 108")	6 Casters (Up to 72" L)	
	8 Casters (Up to 108" L)	
Curb Mount	N/A on V136 Series	
Drip Tray, S/S	Under Open Burners	
Equipment Stand for Counter Equipment Suitable for multiple combinations of equipment. (Not suitable for griddles/frytops over 36" wide or -40 counter models.)	S/S Front and S/S Lower Shelf Solid S/S Top	24" (54 lbs.)
		30" (64 lbs.)
		36" (72 lbs.)
		48" (108 lbs.)
		54" (115 lbs.)
		60" (121 lbs.)
		72" (138 lbs.)
Exterior Bottom (304 S/S)	12" (305mm) Models	
	18" (457mm) Models	
	24" (610mm) Models	
	36" (914mm) Models (std. on 136 & V136)	

Item	Description	Natural (BTU/hr) Max. Capacity	Propane (BTU/hr) Max. Capacity
Flex Connector Kit:* (Hose, Disconnect & Restraining Device)	3' x 1" (914 x 250mm)	366,200	589,600
	4' x 1" (1219 x 250mm)	351,000	565,600
Guard Rail Finished End (Right or Left)	per each		
Heated Cabinet	Consult Factory		
Interconnection (Salamander or Cheesemelter to Range)			
Oven Racks, extra	Standard		
	Convection		
Piezo Ignitor (Ovens Only)			
Plate Shelf	6" Shelf per foot		
	8" Shelf with Support Brackets per foot		
Plate Shelf Cut-Outs (on 8" Plate Shelves Only)	1/6 & 1/4 Pans — Up to 4" Depth (1 cut-out)		
	1/6 & 1/4 Pans — Up to 4" Depth (2,3,4 cut-outs)		
Prison Package	Consult Factory		
Ribbon Grate (with 20,000 BTU Burners Only):	In lieu of Standard 12" Grates		
	In addition to Standard Grates		
Security Options	Consult Factory		
Wok Adapter	Specify 12" or 18" Open Top.		
Flanged Feet (with holes) per each			
42" Depth Suffix -40 per unit	Interior dimensions remain same.		
59 Top OB in front HT rear (In-lieu-of 2 OB)	Deduct 5,000 BTU		

*Note: Additional sizes available upon request, consult the factory.

THE LEGEND STANDARD OVEN WITH A CAST IRON OVEN BOTTOM, COMBINED WITH A 650° F THERMOSTAT MAKES THE PERFECT FINISHING OVEN

Ribbon Grate

Features:

- Ideal for small pans and pots
- Pans easily slide smoothly and evenly across open burners
- Available only for 20,000 BTU Star Burners

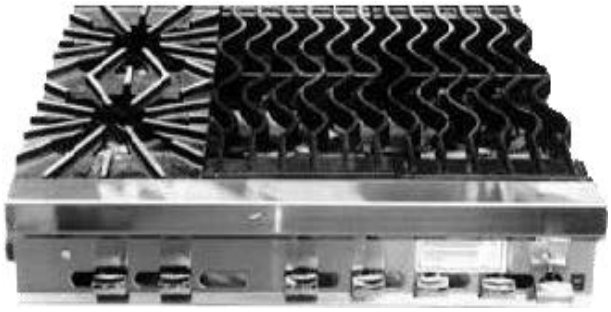

HB, SHS or DHS Width	TSHS — 24" (610mm) Single High Shelf S/S Front	TDHS — 36" (914mm) Double High Shelf S/S Front
136 Series Tubular Single & Double Shelves		
12" (305mm)		
18" (457mm)		
24" (610mm)		
36" (914mm)		
48" (1219mm)		
54" (1372mm)		
60" (1524mm)		
72" (1829mm)		
84" (2134mm)		
90" (2286mm)		
96" (2438mm)		
108" (2743mm)		
Shipping Wt. appox.	15 lbs./ft.	20 lbs./ft.

HB, SHS or DHS	HB — 18" (457mm) High Back		SHS — 24" (610mm) Single High Shelf		DHS — 36" (914mm) Double High Shelf	
Width	S/S Front	S/S Back add:	S/S Front	S/S Back add:	S/S Front	S/S Back add:
136 Series High Solid Shelves and High Backs*						
12" (305mm)						
18" (457mm)						
24" (610mm)						
36" (914mm)						
48" (1219mm)						
54" (1372mm)						
60" (1524mm)						
72" (1829mm)						
84" (2134mm)						
90" (2286mm)						
96" (2438mm)						
108" (2743mm)						
Shipping Wt. appox.	12 lbs./ft.		20 lbs./ft.		26 lbs./ft.	

***Note: High Shelves not recommended for Counter/Modular Stand units.**
***Note: High Shelves not recommended over Fryers/Under fired Broilers.**

Special order:

- High Backs & High Shelves in odd size widths, use next larger size plus 20%.
- High Backs to match height of Single High Shelf, add 20%.
- High Backs to match height of Double High Shelf or Salamander, add 50%.
- Single High Shelf to match height of Double High Shelf or Salamander, add 20%.

Note: No revisions, no cancellations, no returns.

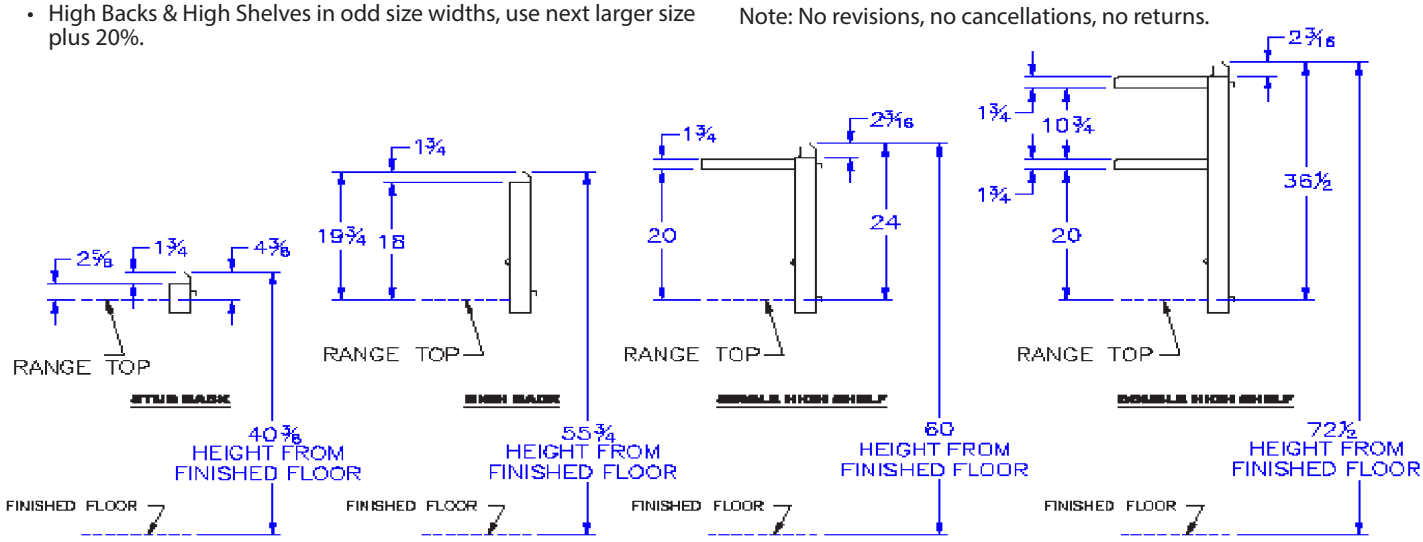

Item	Description
Fry top/Griddle Thermostats	
12", 18", 24" Wide Fry top	One Thermostat*
36" Wide Fry top	Two Thermostats*
48", 54", 60" Wide Fry top	Three Thermostats*
72" Wide Fry top	Four Thermostats*

Note: *Add Suffix T to model number.

Item		Fry top Width				
		12" (305mm)	18" (457mm)	24" (610mm)	30" (762mm)	36" (914mm)
Fry top/Griddle 1" Plate Extra — Single Unit						
1" Plate	36" Deep Range					
1" Plate	42" Deep Range					

Fry top/Griddle over more than one unit
3/4" (Standard) Plate over more than one unit add: $1,160

Item
Fry top Chrome Plate Option (requires thermostat option)
24" Plate (610mm)
36" Plate (914mm)
48" Plate (1219mm)
60" Plate (1524mm)
72" Plate (1829mm)

Item		Fry top Width						
		24" (610mm)	30" (762mm)	36" (914mm)	48" (1220mm)	54" (1372mm)	60" (1524mm)	72" (1830mm)
Fry top/Griddle over more than one unit								
1" Plate	36" Deep Range							
1" Plate	42" Deep Range							

Note: Add Prefix 2/ to model number for Fry top/Griddle on more than one range.

Item
Manifolding
1" Left Rear Manifold with Pressure Regulator
1" Pressure Regulator
1-1/4" Pressure Regulator
1-1/4" Tee with Regulator and Shutoff Valve*
1" Tee with Regulator and Shutoff Valve*
Manifold Cap & S/S Cover (When ordering, specify left or right side).

*** For regulator installed inside spreader cabinet.**

Tubular double high shelf

Single high shelf

Legend Lighting Options for Open Top Sections

- Electronic Solid State Oven Ignition Control –
  Energy Saving Design uses an Intelligent Oven Control to Automatically Ignite Oven Pilot eliminating the need for a standing oven pilot
- RangeTop Pilot Ignition –
  Electronically ignites standing pilot
- Flame Failure –
  RangeTop Safety Valve Automatically Shuts Off Gas When Pilot Flame is Extinguished

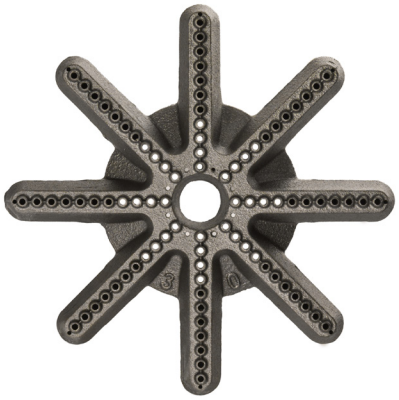

Item	Description	Notes
Pilot Ignition Range Top and Electronic Oven Control		
12" & 18" 24" 36"	Unit Wide RangeTop Cabinet Base, Counter Top or Modular Stand	(a) Range Top Pilot Ignition Only Lift-Out 304 SS Drip Pans; Concealed SS Pilot Tubing & Pilot Burners on Open Tops; 304 S/S Burner Box
V136, 136	RangeTop with Oven	(b) Range Top Pilot Ignition with No Standing Oven Pilot, Intelligent Oven Control Lift-Out 304 SS Drip Pans; Concealed S/S Pilot Tubing & Pilot Burners on Open Tops; 304 S/S Burner Box
Flame Failure Range Top Safety Valves		
12" & 18" 24" 36"	Unit Wide RangeTop Oven Base, Cabinet Base, Counter Top or Modular Stand	(c) One Thermocouple-Sensed Pilot per Burner, Lift-Out 304 SS Drip Pans (-9A excluded), concealed S/S Pilot Tubing & Pilot Burners on Open Tops; 304 S/S Burner Box
Pilot Ignition and Flame Failure Range Top and Electronic Oven Control		
12" & 18" 24" 36"	Unit Wide RangeTop Cabinet Base, Counter Top or Modular Stand	Includes (a) and (c) as noted above
V136, 136	RangeTop with Oven	Includes (b) and (c) as noted above

Item	Description	Notes
Miscellaneous		
Finishing Oven Option	Includes 2 Piece Cast Iron Oven Bottom & 650°F Thermostat	Not Available with Convection Oven or with Any Electronic Ignition or Flame Failure Options

Easy Cleaning Features:

- Removable Lift-off Burners and Venturis.

- Lift-Out 304 SS Drip Pans with integrated handles for easy handling and component positioning.

- Pilots with stainless steel tubing are concealed beneath easily removable shields. Components are protected from grease and over-spill for long lasting performance.

Legend Models & Standard Features

		136-5	E136-5	136I-5I	E136I-5I	Finishing Oven
RANGETOP	Lift-Off Burner	X	X	X	X	X
	Lift-Out Drip Pans		X	X	X	
	Rangetop Flame Failure Valves		X		X	
	Standing Rangetop Pilots	X	X	X	X	X
	Rangetop Spark Ignition			X	X	
OVEN	Throttling Thermostat	X	X			X
	Snap-Action Thermostat			X	X	
	Standing Oven Pilot	X	X			X
	Oven Electronic Ignition			X	X	
	Cast Iron Oven Bottom					X

Heavy Duty SB36 Salamander Broiler

Standard Features:

- S/S Front, 2 sides, top & bottom with remaining exterior black
- Infrared Rapid Start On/Of burner
- SB36 Full-flow burner operation
- 32,000 BTU's/Hr.
- Adjustable grid heights
- Broiling area is 13-1/8"D x 26-3/4"W (333 x 679mm)
- 1/2" (13mm) NPT gas connection at top right rear
- 1/2" (13mm) NPT gas pressure regulator provided.

SB36-W

Model #	Description	BTU's/Hr	Ship Wt. (lbs.)
Salamander Broilers			
SB36-HB	with High Back for Mounting on 136, V136 & 36	32,000	290
SB36-W	with Wall Mounting Brackets (No exterior back panel)	32,000	235
SB36-C	Counter Unit with 4" (102mm) legs	32,000	290

Heavy Duty Gas Cheesemelter

Standard Features:

- S/S Front, 2 sides, top & bottom with remaining exterior black
- Rapid Start Infrared burner(s) rated @ 20,000 & 32,000 BTU/hr
- One rack in bright nickel finish
- Three rack positions
- 3/4" (19mm) gas pressure regulator provided
- 3/4" (19mm) NPT gas connection located:
  - 2-5/8" (67mm) from right side, CM24 & CM36
  - Centered, CM48 & CM72
  - 23-3/4" (603mm) from right side, CM60

CM36

Model #	Description	BTU's/Hr	Ship Wt. (lbs.)
Cheesemelters			
CM24	Wall Mount*	20,000	180
CM36	Wall Mount*	32,000	215
CM48	Wall Mount*	40,000	305
CM60	Wall Mount*	52,000	350
CM72	Wall Mount*	64,000	395
CM24-HB	with High Back for Mounting** on 136, V136 & 36 Ranges	20,000	205
CM36-HB	with High Back for Mounting** on 136, V136 & 36 Ranges	32,000	250
CM48-HB	with High Back for Mounting** on 136, V136 & 36 Ranges	40,000	305
CM60-HB	with High Back for Mounting** on 136, V136 & 36 Ranges	52,000	410
CM72-HB	with High Back for Mounting** on 136, V136 & 36 Ranges	64,000	470

*** For use on noncombustible wall only. ** Interconnect to range $1,124. Pass-thru cheesemelters — Consult factory**

Over fired Broilers

Standard Features:

- S/S Front and Sides
- S/S Top on units except C36SHB, C36SHBPL, C45SHB, C45SHBPL
- Cast iron burners, rated @ 42,000 BTU's/Hr. each
- Adjustable grid heights
- 1-1/4" (32mm) front manifold with one half union on each end provided for battery connection. (Gas pressure regulator properly sized for battery must be provided by the installer. For 136W36, V136W36, 36W36, 43W36.)
- 3/4" (19mm) NPT left manifold with gas pressure regulator provided for 236W36, 243W36, C36, C45. (One per broiler section)
- 6" (152mm) legs, S/S. Except "C" models which have 25" (635mm) high modular stand with S/S lower shelf
- Steakhouse Broiler with Plancha: 3/4" thick plate on top with 3-sided grease trough and interior grease container (C36 & C45 models only)
- Steakhouse Broiler: 1/2" thick plate on top with splash on sides and back. Grease trough in front runs left to grease container hanging on left front (C36 & C45 models only)
- 3 year Parts and Labor Warranty

136W36
136XC36SHPL

Model #	Description	BTU's/Hr.	Ship Wt. (lbs.)
36"W x 34"D (914 x 864mm)			
C36	Broiler on Mod. Stand with S/S Front & Shelf Below	84,000	583
C36SHB	Broiler with Sear Plate on Modular Stand	84,000	723
C36SHBPL	Broiler with Plancha on Modular Stand	84,000	723
236W36	Double Broiler	168,000	942
45"W x 34"D (1143 x 864mm)			
C45	Broiler on Mod. Stand with S/S Front & Shelf Below	126,000	738
C45SHB	Broiler with Sear Plate on Modular Stand	126,000	925
C45SHBPL	Broiler with Plancha on Modular Stand	126,000	925
243W36	Double Broiler	252,000	1,222
36"W x 36"D (914 x 914mm)			
36W36	Broiler with Cabinet Base and Warming Oven	84,000	916
136C36	Broiler with Standard Oven	124,000	1040
V136C36	Broiler with Convection Oven Oven	129,000	1055
136W36	Broiler with Standard Oven and Warming Oven	124,000	984
V136W36	Broiler with Convection Oven and Warming Oven	129,000	991
136C36SHB	Broiler with Sear Plate over Standard Oven	124,000	1103
V136C36SHB	Broiler with Sear Plate over Convection Oven	129,000	1103
136C36SHBPL	Broiler with Plancha over Standard Oven	124,000	1103
V136C36SHBPL	Broiler with Plancha over Convection Oven	129,000	1103
136XC36SHB	Broiler with Sear Plate over Extra Low Oven	116,000	983
136XC36SHBPL	Broiler with Plancha over Extra Low Oven	116,000	983
45"W x 36"D (1143 x 914mm)			
43W36	Broiler with Cabinet Base	126,000	1020
136C45	Broiler with Standard Oven	166,000	1050
V136C45	Broiler with Convection Oven	171,000	1055
136C45SHB	Broiler with Sear Plate over Standard Oven	166,000	1203
V136C45SHB	Broiler with Sear Plate over Convection Oven	171,000	1220
136C45SHBPL	Broiler with Plancha over Standard Oven	166,000	1203
V136C45SHBPL	Broiler with Plancha over Convection Oven	171,000	1220
136XC45SHB	Broiler with Sear Plate over Extra Low Oven	158,000	1080
136XC45SHBPL	Broiler with Plancha Plate over Extra Low Oven	158,000	1080

Over fired Broiler with Refrigerated Base

Standard Features:

- S/S Front ,Sides and back.
- Cast iron burners, rated @ 42,000 BTU's/Hr. each.
- Adjustable grid heights.
- 4" (102mm) high flue riser. Except "C" models with 2" (51mm) flue riser.
- 6" (152mm) legs, S/S. Except "C" models which have 25" (635mm) high modular stand with S/S lower shelf.
- Steakhouse Broiler with Plancha: 3/4" thick plate on top with 3-sided grease trough and interior grease container.
- Steakhouse Broiler: 1/2" thick plate on top with splash on sides and back.
- Energy efficient hermetic compressor/condenser system
- Coated evaporated coil by Turbo-Coil with 5 year warranty
- Three year Warranty on Refrigeration
- Three year warranty on the compressor
- Five year warranty on the evaporator coil

C45SHBPL/RB45-SC

Model #	Description	BTU's/Hr.	Ship Wt. (lbs.)
36"W x 36"D (914 x 914mm)			
C36/RB36-SC	Broiler over Refrigerated Base	84,000	1100
C36SHB/RB36-SC	Broiler with Sear Plate Over Refrigerated Base	84,000	1200
C36SHBPL/RB36-SC	Broiler with Plancha Over Refrigerated Base	84,000	1200
45"W x 36"D (1143 x 914mm)			
C45/RB-48-SC	Broiler Over Refrigerated Base	126,000	1200
C45SHB/RB48-SC	Broiler with Sear Plate Over Refrigerated Base	126,000	1300
C45SHPBL/RB48-SC	Broiler with Plancha Over Refrigerated Base	126,000	1300

Remote units available, Please contact factory for information

Item	Description
Over fired Broilers — Options & Accessories	
42" (1067mm) depth	Suffix -40, any finish. (Interior dimensions remain the same.) For 136W36, V136W36, 36W36 & 43W36.
2-pc. Cast Iron Oven Bottom — add:	For 136W36 only
Bottom Shelf S/S in Cabinet Base	Over fired Broiler 36W36
	Over fired Broiler 43W36
Casters — Over fired Broilers	Single Broiler 5" Wheel; 6" Height
	Double Broiler 5" Wheel; 6" Height
Manifold Assembly	Double Deck 236W36, 243W36
Manifold Cap & S/S Cover	
Rear Manifold (136W36, V136W36, 36W36 & 43W36)	- 1"
Insulated Base for Counter top	In lieu of lower shelf and legs. Only available on C Models. Includes Grease Container Modifications
3/4" Thick Plate Option for SHB models	C36SHB
	C45SHB
Porcelain Coated Grid	C36 (Left and Right Grids)
	C45 (Left, Right and Center Grids)
Porcelain Coated Drip Tray	C36 only

Free Standing Counter/Modular Models, UFSC & UFSM Series

Standard Features:

- S/S front, top trim and splash shields
- 24"W, 30"W, 36"W, 48"W, 60"W or 72"W x 20-5/8"H x 32-7/8"D (610mm, 762mm, 914mm, 1219mm, 1524mm or 1829mm Wide x 524mm High x 835mm Deep)
- Ceramic briquettes — UFSC(C), UFSM(C)
- Radiants — self-cleaning, S/S heat deflectors — UFSC(R), UFSM(R)
- 3/4" (19mm) left rear gas inlet
- 3/4" (19mm) NPT gas pressure regulator provided
- Adjustable 3-position cast iron ULTRA-FLOW reversible top grate
- Modular Stand with S/S front & lower shelf — UFSM(C), UFSM(R)
- High Backs and extended plate shelves are not available on Counter or Modular units

UFSC-36R

Model #	Description	BTU's/Hr.	Ship Wt. (lbs.)
Free Standing Counter Broilers		**32-7/8"D (835mm)**	
UFSC-24C	24" (610mm) Ceramic	90,000	470
UFSC-30C	30" (762mm) Ceramic	90,000	510
UFSC-36C	36" (914mm) Ceramic	135,000	550
UFSC-48C	48" (1219mm) Ceramic	180,000	845
UFSC-60C	60" (1524mm) Ceramic	180,000	925
UFSC-72C	72" (1829mm) Ceramic	270,000	1,005
UFSC-24R	24" (610mm) Radiant	76,000	430
UFSC-30R	30" (762mm) Radiant	95,000	460
UFSC-36R	36" (914mm) Radiant	114,000	490
UFSC-48R	48" (1219mm) Radiant	152,000	765
UFSC-60R	60" (1524mm) Radiant	190,000	825
UFSC-72R	72" (1829mm) Radiant	228,000	885
Free Standing Modular Broilers		**32-7/8"D (835mm)**	
UFSM-24C	24" (610mm) Ceramic	90,000	470
UFSM-30C	30" (762mm) Ceramic	90,000	510
UFSM-36C	36" (914mm) Ceramic	135,000	550
UFSM-48C	48" (1219mm) Ceramic	180,000	845
UFSM-60C	60" (1524mm) Ceramic	180,000	925
UFSM-72C	72" (1829mm) Ceramic	270,000	1,005
UFSM-24R	24" (610mm) Radiant	76,000	430
UFSM-30R	30" (762mm) Radiant	95,000	460
UFSM-36R	36" (914mm) Radiant	114,000	490
UFSM-48R	48" (1219mm) Radiant	152,000	765
UFSM-60R	60" (1524mm) Radiant	190,000	825
UFSM-72R	72" (1829mm) Radiant	228,000	885

Range Match Low-Profile Counter Broilers — Radiant Style

Standard Features:

- S/S Front and top
- Radiants — self-cleaning heavy gauge S/S heat deflectors
- 2-position cast iron ULTRA-FLOW reversible top grate
- 4" (102mm) legs, bright nickel finish
- 1" (25mm) flue riser, S/S. Matches height of 4" (102mm) flue riser on LEGEND series 136 ranges
- 1-1/4" (32mm) front manifold with one-half union on each end provided for battery connection. (Gas pressure regulator properly sized for battery must be provided by the installer)
- 6" (152mm) S/S guard rail
- S/S tube burners rated @ 19,000 BTU/Hr. each

UFLC-36R
(Shown on optional broiler stand)

Model #	Description	BTU's/Hr.	Ship Wt. (lbs.)	# of Grates
Range Match Counter Broilers — with 4" (102mm) Legs		**37-1/4" D (946mm)**		
UFLC-18R	18" Radiant	38,000	210	2
UFLC-24R	24" Radiant	76,000	270	3
UFLC-30R	30" Radiant	95,000	325	4
UFLC-36R	36" Radiant	114,000	370	5
UFLC-48R	48" Radiant	152,000	465	7
UFLC-60R	60" Radiant	209,000	570	9
UFLC-72R	72" Radiant	247,000	670	11

Item	Description	
UFLC Low Profile Counter Broilers — Options & Accessories		
42" Depth (Suffix -40) UF Models (Same grid size)	18', 24", 30", 36"	
	48", 60", 72"	
Broiler Stands (UFLC only) S/S lower shelf and 24" (610mm) high S/S tubular legs.(only one piece of broiler counter equipment per stand)	24" (610mm)	(45 lbs .)
	30" (762mm)	(53 lbs .)
	36" (914mm)	(60 lbs .)
	48" (1219mm)	(90 lbs .)
	60" (1524mm)	(101 lbs .)
	72" (1829mm)	(115 lbs .)
Broiler Stand Casters (5" wheel, 6" height)	Set of 4 (24", 30", 36", 48" Models)	
	Set of 6 (60", 72" Models)	
Manifolding -	(In-lieu-of 1-1/4" front manifold)	
1" Left Rear Manifold	Up to 500,000 BTU with Pressure Reg.	
Manifold Cap & S/S Cover	Must specify when ordering (each end)	
Plate Shelf-per foot	9" Wide S/S to match 6" Plate Shelf on 136 Series Ranges	
	11" Wide S/S to match 8" Plate Shelf on 136 Series Ranges	
Plate Shelf Cut-Outs (on 10-1/2" plate shelves only)	1/6 or 1/4 pans up to 4" deep (1 cut-out)	
	1/6 or 1/4 pans up to 4" deep (2, 3, 4 cut-outs)	
Removable Splash Guard, S/S	18" (457mm)	
	24" (610mm)	
	30" (762mm)	
	36" (914mm)	
	48" (1219mm)	
	60" (1524mm)	
	72" (1829mm)	

UFLC-36R

Item	Description
UFLC, UFSC & UFSM Series — Counter and Modular Units — Options & Accessories	
Casters (5" wheel, 6" height) (UFSM Only)	Set of 4 (24", 30", 36" Models)
	Set of 6 (48", 60", 72" Models)
Cast Iron Radiants	18" (2 ea. Required)
	24" (4 ea. Required)
	30" (5 ea. Required)
	36" (6 ea. Required)
	48" (8 ea. Required)
	60" (11 ea. Required)
	72" (13 ea. Required)

		Natural (BTU/hr) Max. Capacity	Propane (BTU/hr) Max. Capacity
Flex Connector Kit: (Hose, Disconnect & Restraining Device) Note: Additional sizes available upon request, consult the factory.	3' x 3/4" (914 x 19mm)	204,000	328,440
	4' x 3/4" (1219 x 19mm)	185,800	299,140
	3' x 1" (914 x 25mm)	366,200	589,600
	4' x 1" (1219 x 25mm)	351,000	565,600

Round Rod Cold Rolled Steel	In Addition To	Per 6" Section
	In Lieu of Standard	Per 6" Section
Round Rod Hard Chrome	In Addition To	Per 6" Section
	In Lieu of Standard	Per 6" Section
Scraper Cleaner	For Round Rods	
Seafood Grates — 3/8" spacing	In Addition To	Per 6" Section
	In Lieu of Standard	Per 6" Section

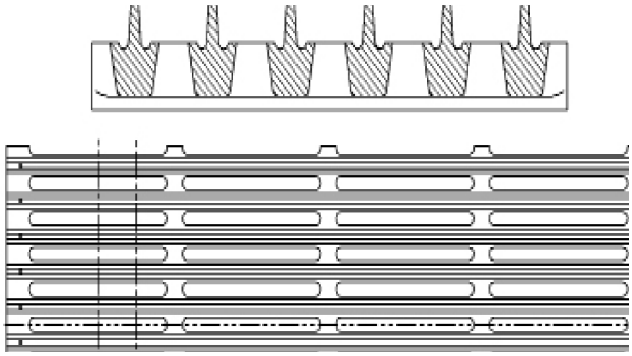

ULTRA-FLOW GRATE

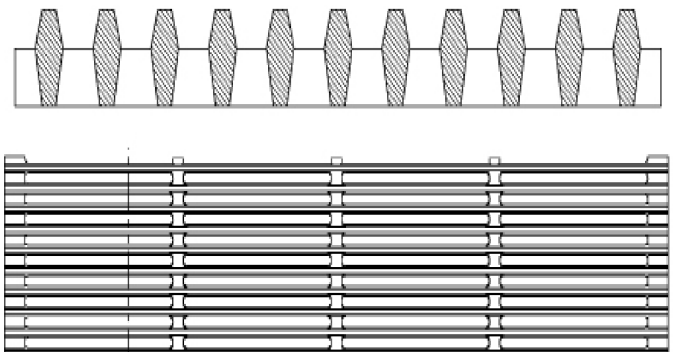

SEAFOOD GRATE

Range Match Models, UF Series

Standard Features:

- S/S front, top trim and splash shields.
- 18"W, 24"W, 30"W, 36"W, 48"W, 60"W, or 72"W x 41-3/8"H x 37-1/4"D. (457mm, 610mm, 762mm, 914mm, 1219mm, 1524mm or 1829mm Wide x 1051mm High x 930mm Deep).
- Radiants — self-cleaning, S/S heat deflectors — UF(R).
- Ceramic briquettes — UF(C).
- 1-1/4" (32mm) front manifold with one-half union on each end provided for battery connection. (Gas pressure regulator properly sized for battery must be provided by the installer.)
- Adjustable 3-position cast iron ULTRA-FLOW reversible top grate.
- Cabinet base with 6" (152mm) legs, S/S.

UF-36R (Shown with optional lower warming rack.)

Model #	Description	BTU's/Hr.	Ship Wt. (lbs.)	# of Grates
Range Match Broilers — Cabinet Base				**37-1/4"D (946mm)**
UF-24C	24" Ceramic	90,000	512	3
UF-30C	30" Ceramic	90,000	552	4
UF-36C	36" Ceramic	135,000	592	5
UF-48C	48" Ceramic	180,000	924	7
UF-60C	60" Ceramic	180,000	1,004	8
UF-72C	72" Ceramic	270,000	1,084	10
UF-18R*	18" Radiant	38,000	320	2
UF-24R	24" Radiant	76,000	472	3
UF-30R	30" Radiant	95,000	502	4
UF-36R	36" Radiant	114,000	532	5
UF-48R	48" Radiant	152,000	845	7
UF-60R	60" Radiant	190,000	905	8
UF-72R	72" Radiant	228,000	965	10

***UF18R is not available as stand alone unit.**

Free Standing Models, UFS Series

Standard Features:

- S/S front, top trim and splash shields.
- 24"W, 30"W, 36"W, 48"W, 60"W or 72"W x 41-3/8"H x 32-7/8"D. (610mm, 762mm, 914mm, 1219mm, 1524mm or 72" 1829mm Wide x 1051mm High x 930mm Deep).
- Radiants — self-cleaning, S/S heat deflectors — UF(R).
- Ceramic briquettes — UF(C).
- 3/4" (19mm) left rear manifold standard with regulator.
- Adjustable 3-position cast iron ULTRA-FLOW reversible top grate.
- Cabinet base with 6" (152mm) legs, S/S.

UFS-36R (Shown with optional lower warming rack and casters.)

Model #	Description	BTU's/Hr.	Ship Wt. (lbs.)	# of Grates
Range Match Broilers — Cabinet Base				**37-1/4"D (946mm)**
UFS-24C	24" Ceramic	90,000	512	3
UFS-30C	30" Ceramic	90,000	552	4
UFS-36C	36" Ceramic	135,000	592	5
UFS-48C	48" Ceramic	180,000	924	7
UFS-60C	60" Ceramic	180,000	1,004	8
UFS-72C	72" Ceramic	270,000	1,084	10
UFS-24R	24" Radiant	76,000	472	3
UFS-30R	30" Radiant	95,000	502	4
UFS-36R	36" Radiant	114,000	532	5
UFS-48R	48" Radiant	152,000	845	7
UFS-60R	60" Radiant	190,000	905	8
UFS-72R	72" Radiant	228,000	965	10

Item	Description
UF and UFS — Cabinet Base Units — Options & Accessories	
Cap & S/S Manifold Cover	UF Range Match Series (each end)
Casters (5" wheel, 6" height) (Also available on UFSM units)	Set of 4 (24", 30", 36" Models)
	Set of 6 (48", 60", 72" Models)
Cast Iron Radiants	18" (2 ea. Required)
	24" (4 ea. Required)
	30" (5 ea. Required)
	36" (6 ea. Required)
	48" (8 ea. Required)
	60" (11 ea. Required)
	72" (13 ea. Required)

Item	Description	Natural (BTU/hr) Max. Capacity	Propane (BTU/hr) Max. Capacity
Flex Connector Kit: (Hose, Disconnect & Restraining Device)	3' x 3/4" (914 x 19mm)	204,000	328,440
	4' x 3/4" (1219 x 19mm)	185,800	299,140
	3' x 1" (914 x 25mm)	366,200	589,600
	4' x 1" (1219 x 25mm)	351,000	565,600

Note: Additional sizes available upon request, consult the factory.

Item	Description
High Backs — 15" (381mm) high — matches height of 18" (457mm) High Back on LEGEND Series 136 Ranges (Available only on UFLC Counter & UF range match units)	24"
	30"
	36"
	48"
	60"
	72"

Item	Description
Hood Assembly	UF-36 (R) & (C)
Manifolding — 3/4" rear gas standard on UFS	
1" Rear Manifold — UF(C) & UF(R)	
Plate Shelf	9" Wide S/S to match 6" Plate Shelf on 136 Series Ranges
	11" Wide S/S to match 8" Plate Shelf on 136 Series Ranges
Plate Shelf Cut-Outs (on 11" plate shelves only)	1/6 or 1/4 Pans up to 4" deep (1 cut-out)
	1/6 or 1/4 Pans up to 4" deep (2, 3, 4 cut-outs)
Round Rod Cold Rolled Steel	In Addition To per 6" section
	In Lieu of Standard per 6" section
Round Rod Hard Chrome	In Addition To per 6" section
	In Lieu of Standard per 6" section
Scraper Cleaner	For Round Rods
Seafood Grates — 3/8" spacing	In Addition To per 6" section
	In Lieu of Standard per 6" section
42" Depth (Suffix -40) UF Models (Same grid size)	18", 24", 30", 36"
	48", 60", 72"

Charcoal Broilers

Standard Features:

- S/S Construction.
- 6" (152mm) - 8" (203mm) adjustable legs, plated.
- Cast iron grid slides.
- Cast iron grid with reinforced cast U-bar.
- Flue damper.
- Hood, adjustable & counterbalanced.
- Warming shelf above hood, 12" deep.

37-F with hood and pan storage

Model #	Description	Grid Size	Ship Wt. (lbs.)
Charcoal Broilers			
30A	30"W (762mm) x 36"D (914mm)	26"W x 27"D	884
31F	30"W (762mm) x 46"D (1168mm)	26"W x 31"D	1,150
37F	35-1/2"W (902mm) x 46"D (1168mm)	30-1/2"W x 31"D	1,140
43F	42"W (1067mm) x 46"D (1168mm)	37"W x 31"D	1,310

Model #
Exhibition Broiling
30A Package — Left and Right Sides, and Cast Iron Grid
31F Package — Left and Right Sides, and Cast Iron Grid
37F Package — Left and Right Sides, and Cast Iron Grid
43F Package — Left and Right Sides, and Cast Iron Grid

Options & Accessories
1/2 Stainless Steel Side — use 60% of price for S/S side
Casters — (Set of 4), 5" wheel, 6" high

Special Order:
- All charcoal broiler models available without hood, flue and warming shelf. Deduct 20% from list price.
- Model 37F & 43F are available with depth of 30A (36" deep), with grid iron same depth as 30A (27" deep) add 20% to list price of "F" model.
- Special orders require 25% non-refundable deposit with order. No revisions, No cancellations, no returns.

136 Series Range Match Fryers

Standard Features:

- S/S Front, sides, and bottom with aluminized back.
- 11" (279mm) high flue riser, S/S. (RF40, RF240)
- Combination gas valve with built-in gas pressure regulator.
- 1-1/4" (32mm) front manifold with one-half union on each end provided for battery connection.
- High temperature limit control.
- Twin baskets.
- 6" (152mm) legs, S/S.

RF40

Model #	Description	Width	Fat Capacity	BTU's/Hr.	Ship Wt. (lbs.)
Fryer					**37-1/4"D (946mm)**
RF40	Single S/S Pot	18" (457mm)	40 lbs.	120,000	300
RF240	Double S/S Pot	36" (914mm)	40 lbs. ea.	240,000	475
Fryer Drain Cabinet					**37-1/4"D (946mm)**
RD18	Fryer Drain Cabinet (Only sold with Fryers)	18" (457mm)	N/A	N/A	275

Item	Notes
Fryer Options & Accessories	
Baskets — Twin	Fryer (Extra)
Baskets — Triple	Fryer (In lieu of twin baskets)
Curb Mount	By Others
High Back	For Fryer with Drain Cabinet and/or Worktop, 72" max. Width
Splash, side (8" high) (Use for fryer next to open flame unit)	(Ref. L or R)
1" Left Rear Manifold	(Up to 500,000 BTU's)
Manifold Caps & S/S Cover	
Inset Cover, S/S	For Frypot (each)

Stock Pot Stoves

Standard Features:

- S/S front, sides, back & legs.
- Cast iron burners.
- 1/2" (13mm) NPT right rear manifold. 1/2" (13mm)

SP-2053

Model #	Description	BTU's/Hr.	Ship Wt. (lbs.)
Stock Pots		**20"W x 21-1/4"D x 22-1/2"H (508 x 540 x 572mm)**	
SP2035	Banjo Burner	35,000	125
SP2053	2-Ring Burner	53,000	145

(Pot not included)

Additional model configurations available, please call factory

Note: Casters not available.

Heavy Duty Gas Pasta Cooker

Pasta Cooker

Standard Features:

- Single or double chamber gas pasta cooker
- 6" (152mm) high flue riser with stainless steel cap
- Construction is 304/316 stainless steel
- Corrosion proof - triple fiberglass mylar insulation
- One 60,000 BTU/hr. high efficiency burner or (2) for double chamber
- Standing pilot for automatic ignition
- Safety pilot valve
- Bulk rectangle pasta basket with removable handles

CPG-1
(Shown with optional round pasta baskets.)

Model #	Description	Width	BTU's/Hr.	Ship Wt. (lbs.)
Pasta Cooker				**33-1/2"D (851mm)**
CPG-1	Single Chamber Pasta Cooker	15-7/8" (403mm)	80,000	340
CPG-2	Double Chamber Pasta Cooker	31-1/2" (800mm)	160,000	450
CPG-1 Plus	Single Chamber Pasta Cooker	17-3/4" (451mm)	80,000	340
CPG-2 Plus	Double Chamber Pasta Cooker	35-1/2" (902mm)	160,000	450
Basket Options				
6 – Round Pasta Baskets				
3 – 1/3 Rectangle Pasta Baskets				
2 – 1/2 Rectangle Pasta Baskets				
1 – Full-Size Pasta Basket				

CONSULT FACTORY FOR BUILT-IN AND CUSTOM INDUCTION PRODUCT OPTIONS

Hearth Bake Pizza Ovens

Standard Features:

- S/S Front, 2 sides & top —
  with 31" (787mm) stainless steel clad gusset-style legs (single deck).
  with 15" (381mm) stainless steel clad gusset-style legs (double oven).
- 1-1/2" (38mm) Cordierite deck.
- Sides, Back and Top lined with Fire Brick.
- 650°F (343°C) thermostat.
- 8" (203mm) high decks.
- Cast Iron burners rated @ 40,000 BTU/Hr. each.
- 7-3/4" (197mm) high flue deflector, black finish.
- 3/4" (19mm) NPT right rear manifold.
- 3/4" (19mm) NPT gas pressure regulator.
- Fully welded all stainless steel doors.

25P-2
Shown with standard stainless steel gusset-style legs.

Model #	Description	Deck Size	BTU's/Hr.	Ship Wt. (lbs.)
Pizza Ovens		**62"W x 40-1/2"D (1575 x 1029mm)**		
13P-1	Single Deck	41-1/2"W x 31"D	80,000	1,120
23P-2	Double Deck	41-1/2"W x 31"D	160,000	2,235
Pizza Ovens		**69"W x 45-1/2"D (1753 x 1156mm)**		
14P-1	Single Deck	48-1/2"W x 36"D	120,000	1,375
24P-2	Double Deck	48-1/2"W x 36"D	240,000	2,690
Pizza Ovens		**81"W x 45-1/2"D (2057 x 1156mm)**		
15P-1	Single Deck	60-1/2"W x 36"D	160,000	1,660
25P-2	Double Deck	60-1/2"W x 36"D	320,000	3,265

Item	Description
Pizza Ovens — Options & Accessories	
Down Draft Diverter (in-lieu-of std. flue deflector)	S/S
Manifold Assembly	for single gas inlet — 3/4" (19mm) NPT
Trim Package Per Deck	all models — (Brass)
Casters (Available on Doubles Only)	set of 4

15P-1
Shown with standard stainless steel gusset-style legs.

Chinese Range

Standard Features:

- Modular Construction (Model Prefix CRM)
- Cabinet Base (Model Prefix CR)
- S/S Finish includes: Front, two sides, back, 12-1/2" (318mm) legs
- S/S Pipe Overshelf, (holds wok covers)
- Drip Tray below each burner, S/S
- S/S Top Plate and Fixed Cylinder, 10 gauge 304
- Well Sections with unique double cylinder construction. (Removable inner cylinder sets on retaining lugs inside the fixed cylinder.
- 12", 14", 16", 18", or 20" (305mm, 356mm, 406mm, 457mm or 508mm) diameter Well Section with pot supports may be used for SOUP POT or Wok
- 9" (229mm) wide fixed cutting board / plate shelf, S/S
- Perforated Copper Water Line with Master Water Valve
- 3/4" (19mm) or 1" (25mm) Rear Gas Inlet with gas pressure regulator
- Ranges over 120" (3048mm) will be fabricated in two or more sections. Each section will have a separate rear gas connection and 2" (51mm) NPT rear drain (Specify drain location.)
- Master Gas Control Valve for Ring Burner (one per wok) (Allows all 2 and 3-ring burners to be turned on/off simultaneously)
- Knee Valve.

CRM-2

Model #	Description
Gas Chinese Range	
CRM-1	1 Hole Range
CRM-2	2 Hole Range
CRM-3	3 Hole Range
CRM-4	4 Hole Range
CRM-5	5 Hole Range
CRM-6	6 Hole Range

Gas Chinese Range — Options & Accessories

Casters	Description
Set of 4	Up To 48" Wide
Set of 6	Up To 100" Wide
Set of 8	Up To 120" Wide

Notes:

1. Order bowl sizes from left to right.
2. Shipping weight — Approximately 150 lbs./foot in length.
3. All Chinese Ranges built to customer specifications. 25% non-refundable deposit required with order. No revisions, no cancellations, no returns.

Wok Sizes	14"	16"	18"	20"	22"	24"	26"	28"
Well Section Removable Cylinder	12"	14"	16"	18"	20"	22"	24"	25"
Soup Pot Size	10"	12"	14"	16"	18"	N/A	N/A	N/A
Range Length Per Wok/Soup Pot	20"	22"	24"	26"	28"	30"	32"	34"
Ring Burner — Standard	2-RING	2-RING	2-RING	3-RING	3-RING	3-RING	3-RING	3-RING
BTU/Hr. — Wok	53,000	53,000	53,000	107,000	107,000	107,000	107,000	107,000
BTU/Hr. — Soup Pot Well	53,000	53,000	53,000	53,000	53,000	N/A	N/A	N/A
BTU/Hr. — Jet Burner Option	80,000	80,000	80,000	120,000	120,000	120,000	120,000	120,000
BTU/Hr. — 220,000 Jet Burner Option	N/A	N/A	N/A	N/A	N/A	220,000	220,000	220,000

Heavy Duty Range Match Wok

Standard Features:

- S/S Front and sides
- Swing faucet.
- 3" wide fixed guard rail.
- Jet burners.
- S/S single door.
- 6" (152mm), S/S adjustable legs.

Model 24-18 Range Match Wok

Model #	Description	Wok Size	Well Section Removable Cylinder	Soup Pot Size	BTU's/Hr.	Ship Wt. (lbs.)
24"W (610mm) Cabinets						**37-1/4"D (946mm)**
24-18	24" Cabinet 18" WOK	18" (457mm)	16"	14"	80,000	350
30"W (762mm) Cabinets						**37-1/4"D (946mm)**
30-24	30" Cabinet 24" WOK	24" (610mm)	22"	18"	120,000	400
36"W (914mm) Cabinets						**37-1/4"D (946mm)**
36-18	36" Cabinet 18" WOK	18" (457mm)	16"	14"	80,000	450
36-20	36" Cabinet 20" WOK	20" (508mm)	18"	16"	120,000	450
36-24	36" Cabinet 24" WOK	24" (610mm)	22"	N/A	120,000	450

Glycol Ice and Heat Sauté Station

Standard Features:

- Welded Construction
- 304 S/S Exterior.
- Glycol Cool raised rail, accommodates 1/3 or 1/6 pans
- Heavy Duty cast iron open top grates
- 30,0000 BTU/hr. star burners
- Enhanced reinforced and specially insulated refrigerated base
- 304 Stainless steel drawers
- Full extension ventilated drawer system
- Removable magnetic drawer gaskets
- Digital Thermostats
- Turbo Coil Evaporator Coil
- Remote or Self-contained configurations
- Environmentally friendly Kyoto Protocol compliant foam insulation
- Five Years Parts and Labor on the compressor
- Five year warranty on coated evaporated coil by Turbo Coil
- Lifetime warranty on drawer slides.

Model C48-5F/RB48-SCRR

Model #	Length (mm)	Drawer Size Openings			Burners	Ship Wt. (lbs.)	# Rail Pans*	# Base Pans*	Utilities			
		14-3/8"	22-3/8"	27-1/4"					H.P.	Volts	Amps	Phase
Remote Sauté						**42"H x 33-3/4"D (1067 x 857mm)**						
C36-5F/RB36-RRR	36" (914)			2	3	350	4	2	N/A	115	1.6	1
C48-5F/RB48-RRR	48" (1219)	2	2		4	400	6	6	N/A	115	2.2	1
C60-5F/RB60-RRR	60" (1524)		2	2	5	450	7	8	N/A	115	2.5	1
C72-5F/RB72-RRR	72" (1829)			4	6	500	9	8	N/A	115	2.5	1
Self-Contained Sauté						**25"H x 33-3/4"D (635 x 857mm)**						
C36-5F/RB36-SCRR	36" (914)	2			3	470	4	2	1/3	115	10.35	1
C48-5F/RB48-SCRR	48" (1219			2	4	495	6	4	1/3	115	10.33	1
C60-5F/RB60-SCRR	60" (1524)	2	2		5	525	7	6	1/2	115	14.89	1
C72-5F/RB72-SCRR	72" (1829)		2	2	6	550	9	8	1/2	115	15.56	1

* Pans not included. * Stub-out location standard on left rear unless specified.

* Custom sizes & configurations available, consult factory.

THE GLYCOL COOLED SAUTÉ STATION COMBINES A SAUTÉ STATION WITH A RAISED PAN CHILLER, ON TOP OF A REFRIGERATED BASE FOR AN EXTREMELY EFFICIENT COOKING FOOTPRINT

Model C36-5F/RB36-RRR with optional casters

Glycol Ice and Heat Induction Sauté Station

Standard Features:

- Welded Construction
- 304 S/S Exterior.
- Glycol Cool raised rail, accomodates 1/3 or 1/6 pans
- 3.5kW induction hobs
- 6mm Ceran glass
- Enhanced reinforced and specially insulated refrigerated base
- 304 Stainless steel drawers
- Full extension ventilated drawer system
- Removable magnetic drawer gaskets
- Digital Thermostats
- Turbo Coil Evaporator Coil
- Environmentally friendly Kyoto Protocol compliant foam insulation
- 5 year compressor warranty

Model #	Width (mm)	Drawer Size Openings			Heat Zones	# Rail Pans*	# Base Pans*	Induction Voltage	Utilities			
		14-3/8"	22-3/8"	27-1/4"					Hz	Volts	Total Amps	Phase
Self-Contained Sauté							**25"H x 33-3/4"D (635 x 857mm)**					
C36-2IF/RB-36-SCRR	36" (914)	2			2	4	2	200-240	60	115	32	1
C48-3IF/RB-48-SCRR	48" (1219)			2	3	6	4	200-240	60	115	48	1
C60-3IF/RB-60-SCRR	60" (1524)	2	2		4	7	6	200-240	60	115	48	1
C72-4IF/RB-72-SCRR	72" (1829)		2	2	5	9	8	200-240	60	115	64	1

* Pans not included. * Stub-out location standard on left rear unless specified.
* Custom sizes & configurations available, consult factory.

C48-3IF/RB-48-SCRR shown with optional casters

ELECTRIC SAUTÉ STATION ALL THE EFFICIENCIES OF OUR STANDARD SAUTÉ STATION IN AN ALL ELECTRIC UNIT

Heavy Duty Refrigerated Chef Base

Standard Features:

- 304 S/S front, sides, top, bottom and back.
- Digital thermostat temperature control
- Heavy Duty, full extension ventilated drawer systems.
- Coated Evaporator coil by Turbo Coil with 5 year warranty
- Magnetic pop-out drawer gaskets.
- Available in remote or self-contained configurations.
- All welded construction.
- 6" S/S legs std.
- Top finished with marine edge
- Transitional base available for mounting Montague counter top equipment

RB-60-SC
(Shown with optional casters.)

Model #	Length (mm)	Drawer width and No.			Ship Wt. (lbs.)	# of Pans*	Utilities			
		14-3/8"	22-3/8"	27-1/4"			H.P.	Volts	Amps	Phase
Remote Refrigerator - Standard 404A Refrigerant†						**25"H x 33-3/4"D (635 x 857mm)**				
RB-36-R	36" (914mm)			2	350	4	N/A	115	1.1	1
RB-48-R	48" (1219mm)	2	2		400	6	N/A	115	1.7	1
RB-60-R	60" (1524mm)		2	2	450	8	N/A	115	2.0	1
RB-72-R	72" (1829mm)			4	500	8	N/A	115	2.0	1
RB-84-R	84" (2133mm)		4	2	550	12	N/A	115	3.0	1
RB-96-R	96" (2438mm)			6	600	12	N/A	115	3.0	1
RB-108-R	108" (2743mm)		6	2	780	16	N/A	115	4.0	1
Self-Contained Refrigerator - Standard 404A Refrigerant only						**25"H x 33-3/4"D (635 x 857mm)**				
RB-36-SC	36" (914mm)	2			470	2	1/3	115	7.7	1
RB-48-SC	48" (1219mm)			2	495	4	1/3	115	7.7	1
RB-60-SC	60" (1524mm)	2	2		525	6	1/3	115	11.6	1
RB-72-SC	72" (1829mm)		2	2	550	8	1/3	115	11.6	1
RB-84-SC	84" (2133mm)			4	625	8	1/2	115	12.4	1
RB-96-SC	96" (2438mm)		4	2	700	12	1/2	115	12.4	1
RB-108-SC	108" (2743mm)			6	875	16	1/2	115	12.4	1

* Pans not included. † Refrigerant [must be specified.] * Stub-out location standard on left rear unless specified.

Heavy Duty Chef Freezer Base

Standard Features:

- 304 S/S front, sides, top, bottom and back
- Energy efficient hermetic compressor/condenser system
- Digital thermostat Temperature controlled
- Heavy Duty, full extension ventilated drawer systems.
- Coated Evaporator coil by Turbo Coil with 5 year warranty
- Magnetic pop-out drawer gaskets.
- Available in remote or self-contained configurations.
- All welded construction.
- 6" S/S legs std.
- Transitional base available for mounting Montague counter top equipment

Full Extension ventilated drawer system

Model #	Length (mm)	Drawers width and No.			Ship Wt. (lbs.)	# of Pans*	Utilities			
		14-3/8"	22-3/8"	27-1/4"			H.P.	Volts	Amps	Phase
Remote Freezer - Standard 404Z Refrigerant only										**25"H x 33-3/4"D (635 x 857mm)**
FB-36-R	36" (914mm)			2	350	4	N/A	115	3.95	1
FB-48-R	48" (1219mm)	2	2		400	6	N/A	115	7.05	1
FB-60-R	60" (1524mm)		2	2	450	8	N/A	115	7.91	1
FB-72-R	72" (1829mm)			4	500	8	N/A	115	8.26	1
FB-84-R	84" (2133mm)		4	2	550	12	N/A	115	9.10	1
FB-96-R	96" (2438mm)			6	600	12	N/A	115	12.09	1
FB-108-R	108" (2743mm)		6	2	780	16	N/A	115	15.17	1
Self-Contained Freezer - Standard 404Z Refrigerant only										**25"H x 33-3/4"D (635 x 857mm)**
FB-36-SC	36" (914mm)	2			470	2	1/3	115	9.3	1
FB-48-SC	48" (1219mm)			2	495	4	1/3	115	9.3	1
FB-60-SC	60" (1524mm)	2	2		525	6	1/2	115	15.77	1
FB-72-SC	72" (1829mm)		2	2	550	8	3/4	115	14.98	1
FB-84-SC	84" (2133mm)			4	625	8	3/4	115	15.34	1
FB-96-SC	96" (2438mm)		4	2	700	12	1	115	22.57	1
FB-108-SC	108" (2743mm)			6	875	12	1	115	23.15	1

* Pans not included. * Stub-out location standard on left rear unless specified.

Item	Notes	
Refrigeration/Freezer Base Accessories		
Casters — (for self-contained units only)	36"	4
	48"-60"	6
	72"-96"	8
	108"	10

* Custom sizes & configurations available, consult factory.

MONTAGUE REFRIGERATION FEATURES TURBO COIL TECHNOLOGY INSIDE

Glycol Ice Drop in Pan Chillers

Standard Features:

- Designed to drop in place into new or existing counter tops
- Self-Contained or remote models available
- Accommodates 1/3, 1/6 or 1/9 pans (pans not included)
- All Welded Construction
- 304 Stainless top frame
- 304 S/S interior and outer pan
- 304 S/S wrapped refrigeration lines immersed in a raised reservoir of glycol
- Integrated glycol and refrigerant system for efficient proximity cooling and temperature transfer
- High density environmentally friendly Kyoto Protocol compliant foamed in place insulation

Model PC-46-R

Model #	Width inches (mm)	# of 1/3 Pans*	Ship Wt.	HP*	Voltage	Phase	AMPs	BTU's
Self- Contained Model				**23-1/8" H x 18-1/8" D (587 x 460mm)**				
PC-26-SC	26 1/8"	3	300 lbs	1/4	115	1	5.5	1200
PC-32-SC	32 7/8"	4	360 lbs	1/4	115	1	5.5	1200
PC-39-SC	39 3/4"	5	410 lbs	1/4	115	1	5.5	2000
PC-46-SC	46 5/8"	6	460 lbs	1/3	115	1	6.8	2400
PC-53-SC	53 1/2"	7	520 lbs	1/3	115	1	6.8	2400
PC-60-SC	60 3/8"	8	570 lbs	1/3	115	1	6.8	3600
PC-67-SC	67 1/4"	9	625 lbs	1/3	115	1	6.8	3600
Remote Model				**10-1/8" H x 18-1/8" D (257 x 60mm)**				
PC-26-R	26 1/8"	3	200 lbs	N/A	N/A	N/A	N/A	840
PC-32-R	32 7/8"	4	260 lbs	N/A	N/A	N/A	N/A	960
PC-39-R	39 3/4"	5	310 lbs	N/A	N/A	N/A	N/A	1080
PC-46-R	46 5/8"	6	360 lbs	N/A	N/A	N/A	N/A	1205
PC-53-R	53 1/2"	7	420 lbs	N/A	N/A	N/A	N/A	1330
PC-60-R	60 3/8"	8	470 lbs	N/A	N/A	N/A	N/A	1450
PC-67-R	67 1/4"	9	525 lbs	N/A	N/A	N/A	N/A	1575

MONTAGUE'S GLYCOL PAN CHILLERS OFFER RELIABLE TEMPERATURE PROTECTION IN THE HARSHEST ENVIRONMENTS. DESIGNED TO DROP INTO NEW OR EXISTING COUNTER TOPS. CUSTOM SIZES AVAILABLE.

Glycol Prep Pan Holding Table

Standard Features:

- Self-Contained or remote models available
- Self contained model has Energy efficient hermetic compressor/ condenser system
- Accommodates 1/3, 1/6 or 1/9 pans (pans not included)
- All Welded Construction
- 304 Stainless steel front, bottom, back and top
- 304 S/S interior and outer pan
- 304 S/S wrapped refrigeration lines immersed in a raised reservoir of glycol
- Integrated glycol and refrigerant system for efficient proximity cooling and temperature transfer

Model PCM-18-SC with optional casters

Model #	Width (mm)	# of 1/3 Pans*	Ship Wt. (lbs.)	Utilities				BTU's
				H.P.	Volts	Amps	Phase	
Self- Contained Model				**36" H x 36 5/8" D (914 x 930mm)**				
PCM-18-SC	18" (457)	3	200	1/3	115	1.2	1	840
PCM-36-SC	36" (914)	6	250	1/3	115	6.8	1	1200
Remote Model				**36" H x 36 5/8" D (914 x 930mm)**				
PCM-18-R	18" (457)	3	100	N/A	N/A	N/A	N/A	1000
PCM-36-R	36" (914)	6	150	N/A	N/A	N/A	N/A	1420

* Pans not included.

Glycol Ice Batter Holding Prep Table

Standard Features:

- Self-Contained or remote models available
- Self contained model has Energy efficient hermetic compressor/ condenser system
- All Welded Construction
- 304 Stainless Steel front, bottom, back and top
- 304 S/S interior and outer pan
- 304 S/S wrapped refrigeration lines immersed in a raised reservoir of glycol
- Integrated glycol and refrigerant system for efficient proximity cooling and temperature transfer

Model PC-18-SC with optional casters

Model #	Width (mm)	Holding Cups		Ship Wt. (lbs.)	Utilities			
		7"Dia. x 9"Deep	9" Dia. x 9" Deep		H.P.	Volts	Amps	Phase
Remote Model				**36" H x 36 5/8" D (914 x 930m)**				
PC-18-R	18" (457)	2	1	100	N/A	N/A	1.2	1
PC-36-R	36" (914)	4	2	150	N/A	N/A	1.2	1

* Pans not included.

Refrigerated Glycol Pizza Prep

Standard Features:

- Heavy Duty high performance refrigerator base with glycol cooled raised rail.
- 304 S/S wrapped refrigeration lines immersed in a raised reservoir of glycol
- Accommodates 1/3, 1/6 or 1/9 pans (pans not included)
- All Welded Construction
- 304 Stainless Steel exterior
- Digital Thermometer
- Coated evaporator Coil powered by Turbo Coil
- Integrated glycol and refrigerant system for efficient proximity cooling and temperature transfer
- Self-Contained or remote models available
- Removable Magnetic Snap in door gaskets for easy cleaning
- Removable and reversible polyethylene cutting board available with optional Richlite cutting board
- Self Closing doors, easily removable for cleaning
- Optional Drawer storage instead of doors available

PP-72-SC shown with optional casters

Model #	Length (mm)	Door width and No.		Ship Wt. (lbs.)	Rail # 1/3 of Pans*	Utilities			
		18"	21"			H.P.	Volts	Amps	Phase
Self-Contained Refrigerator - Standard 404A Refrigerant only									
PP-36-SC	36" (914mm)	1		400	4	1/3	115	9.0	1
PP-48-SC	48" (1219mm)		1	450	6	1/3	115	9.0	1
PP-60-SC	60" (1524mm)	1	1	500	7	1/2	115	12.61	1
PP-72-SC	72" (1829mm)		2	550	9	1/2	115	12.61	1
Remote Refrigeration Consult Factory for refrigerant									
PP-36-R	36" (914mm)		1	350	4	N/A	115	2.3	1
PP-48-R	48" (1219mm)		2	400	6	N/A	115	2.9	1
PP-60-R	60" (1524mm)	2	1	450	7	N/A	115	3.25	1
PP-72-R	72" (1829mm)		3	500	9	N/A	115	3.25	1
PP-96-R	96" (2438mm)		4	700	13	N/A	115	4.21	1

* Pans not included. † Refrigerant [must be specified.] * Stub-out location standard on left rear unless specified.

MONTAGUE'S GLYCOL PREP TABLES KEEP FROZEN, CHILLED AND PREPARED ITEMS CLOSE BY, MAKING FOOD PREP MORE EFFICIENT

Refrigerated Glycol Sandwich Prep

Standard Features:

- Heavy Duty high performance refrigerator base with glycol cooled raised rail.
- 304 S/S wrapped refrigeration lines immersed in a raised reservoir of glycol
- Accommodates 1/3, 1/6 or 1/9 pans (pans not included)
- All Welded Construction
- 304 Stainless Steel exterior
- Digital Thermometer
- Coated evaporator Coil powered by Turbo Coil
- Integrated glycol and refrigerant system for efficient proximity cooling and temperature transfer
- Self-Contained or remote models available
- Removable Magnetic Snap in door gaskets for easy cleaning
- Removable and reversible polyethylene cutting board available with optional Richlite cutting board
- Self Closing doors, easily removable for cleaning
- Optional Drawer storage instead of doors available

PT-72-SC shown with optional casters

Model #	Length (mm)	Door width and No.		Ship Wt. (lbs.)	Rail # 1/3 of Pans*	Utilities			
		18"	21"			H.P.	Volts	Amps	Phase
Self-Contained Refrigerator - Standard 404A Refrigerant									
PT-36-SC	36" (914mm)	1		400	6	1/3	115	9.0	1
PT-48-SC	48" (1219mm)		1	450	9	1/3	115	9.0	1
PT-60-SC	60" (1524mm)	1	1	500	12	1/3	115	12.61	1
PT-72-SC	72" (1829mm)		2	550	15	1/2	115	12.61	1
PT-96-SC	96" (2438mm)		3	750	21	3/4	115	16.7	1
Remote Refrigeration Consult Factory for refrigerant									
PT-36-R	36" (914mm)		1	350	6	N/A	115	2.3	1
PT-48-R	48" (1219mm)		2	400	9	N/A	115	2.9	1
PT-60-R	60" (1524mm)	2	1	450	12	N/A	115	3.2	1
PT-72-R	72" (1829mm)		3	500	15	N/A	115	3.2	1
PT-96-R	96" (2438mm)		4	700	21	N/A	115	4.2	1

* Pans not included. † Remote Refrigerant [must be specified.] * Stub-out location standard on left rear unless specified.

MONTAGUE'S GLYCOL PREP TABLES ARE DESIGNED FOR EASY MAINTENANCE AND ENERGY EFFICIENCIES AND COVERED BY THE MOST COMPREHENSIVE REFRIGERATION WARRANTY IN THE INDUSTRY

MONTAGUE VECTAIRE

Since 1857

Convection Redefined

All convection ovens move heated air over food to reduce cooking times. But nearly four decades ago, Montague pioneered a fundamentally better way to accomplish this goal —

The Vectaire indirect or muffled heating system. The cooking chambers of our ovens are sealed off from outside air and combustion gases so that moisture and flavors are sealed in. Browning is more even. Add to this the most maintenance-free oven doors in the industry, and you have an unbeatable combination — better baking, because Montague ovens are better by design.

- Indirect-fired oven design offers distinct advantages over the competition.
- Enhanced flavor retention.
- More even browning.
- Unbeatable dependability.
- Faster preheat and recovery.
- Reduced energy input.
- Impeccable Montague craftsmanship.

Energy Star Certified Vectaire HX Series

- Innovative Tri-Therm heating system includes efficient new burners and integral heat exchanger that optimizes heat transfer to the oven chamber.
  - Foods reach target temperatures faster.
    - Preheat and recovery performance improves by over 30 percent.
    - Productivity increase, at 10 percent reduced energy input.

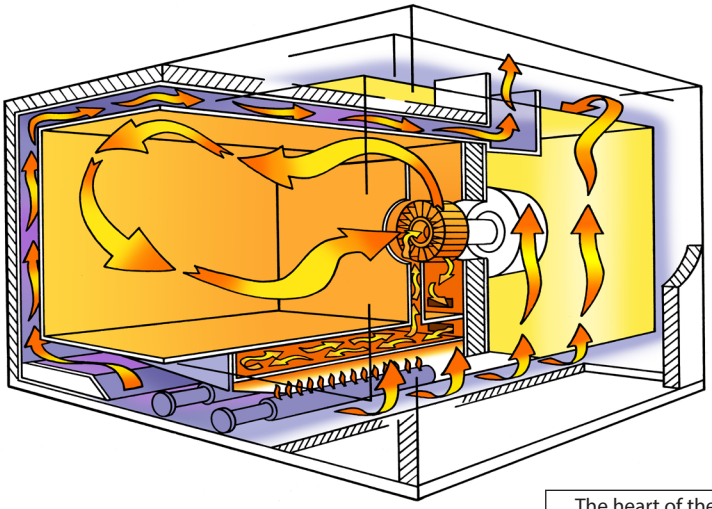

Sealed cooking chamber keeps moisture, nutrients and flavor in the product.

Hot gasses are circulated through a baffled, double wall chamber. The inner walls become a heat exchanger for the oven cavity.

The fan blends the heat from the TRI- THERM system with the oven air and circulates it throughout the oven cavity.

The innovative TRI-THERM burner delivers more useable heat than conventional atmospheric burners.

The heart of the TRI-THERM system is the heat exchanger (HX). It quickly and efficiently transfers heat from the burner to the oven chamber without introducing combustion gasses.

Apollo Gas Convection Ovens — Standard Depth

Standard Features:

- S/S front, sides and top.
  Aluminized steel back and flue deflector with S/S trim on front.
- Gusset-style legs. Black finish on single ovens.
- 6" (152mm) black legs on double ovens.
- Porcelainized 16 gauge steel interior.
- Oven interior dimensions: 27"W x 21"D x 20-1/2"H.
- Removable 9-position bright nickel rack guides.
- Five 26" x 27" (660 x 686mm) bright nickel racks with rack stop and non-tip feature.
- Standing pilot.
- Door style is split-type, vertical opening, side mounted. Each door has
  a double pane thermal viewing window.
- Snap acting switch type T-stat, 200°F (93°C) to 500°F (260°C) with "Burner/On" indicator light.
- 60-minute electric timer.
- Electrical: 120V/1Ph/60Hz, 7.2 amps. 6 ft. grounded supply cord.
- Oven motor: Split phase, air cooled, two-speed 1725/1140 RPM, 1/2 HP with thermal overload protection.

R2-85A

Model #	Description	BTU's /Hr.	Ship Wt. (lbs.)
Apollo Convection Ovens — Single Deck			**38-1/4"W x 35-7/8"D (972 x 911mm)**
R85A	Standard with Black Gusset Legs	85,000	570
Apollo Convection Ovens — Double Deck			**38-1/4"W x 35-7/8"D (972 x 911mm)**
R2-85A	Standard with Black Stacking Kit	170,000	1,045

Description
Apollo Convection Ovens — Options & Accessories
S/S Legs — for Double Convection Ovens — 6" (Set of 4)
S/S Gusset Legs — 24" (Single Oven)

R-85A/R2-85A
Control Panel.

Control Panel Features:

- Power/Fan speed control.
- Automatic fan cutoff when door is opened (except in cool-down).
- Electric, snap-action 200-500°F (93-260°C) thermostat.
- Burner – ON indicator.
- 60-minute electric countdown timer with alarm.
- Momentary-ON interior light switch.

QUALITY & VALUE

R-85A with optional casters

HX Series Gas Convection Ovens — Bakery Depth

Standard Features:

- Gusset-style legs. Black finish.
- Porcelainized 16 gauge steel interior.
- Removable 9-position bright nickel rack guides.
- Five 26" x 27" (660 x 686mm) bright nickel racks with rack stop and non-tip feature.
- Electronic Ignition System.
- Oven interior dimensions: 27"W x 27"D x 20-1/2"H per deck.
- Accepts 18" x 26" (457 x 660mm) pans length or sideways.
- S/S door style is split-type, vertical opening, side mounted. Each door has a double pane thermal viewing window.
- Solid State Thermostat, 200°F (93°C) to 500°F (260°C) with "Burner/On" indicator light on std. HX.
- 60-minute electric countdown timer and alarm on std. HX.
- Electrical: 120V/1Ph/60Hz, 7.2 amps. 6 ft. grounded supply cord.
- Oven motor: Split phase, air cooled, two-speed 1725/1140 RPM, 1/2 HP with thermal overload protection.
- Pre-programmed HOLD feature for Roast & Hold operations.
- Cook-n-Hold — Solid State Thermostat 150°F to 500°F. (HX63AH/HX2-63AH)
- Cook-n-Hold — 24 hr. Digital countdown timer & electronic alarm. (HX63AH/HX2-63AH)

HX-63
(Shown with optional S/S Gusset legs.)

Model #	Description	BTU's /Hr.	Ship Wt. (lbs.)
HX Series Convection Ovens — Single Deck			**38-1/4"W x 41-7/8"D (972 x 1064mm)**
HX63A	Standard HX Controls	63,000	600
HX63AH	Cook-n-Hold Controls	63,000	600
HX Series Convection Ovens — Double Deck			**38-1/4"W x 41-7/8"D (972 x 1064mm)**
HX2-63A	Standard HX Controls	126,000	1,205
HX2-63AH	Cook-n-Hold Controls	126,000	1,205

Standard
A Package
Control Panel.

Cook-n-Hold
AH Package
Control Panel.

Control Panel Features:

- Power/Fan speed control.
- Automatic fan cutoff when door is opened (except in cool-down).
- Momentary-ON interior light switch.
- Burner-ON indicator light.

Standard –A Package:

- Solid state 200-500°F (93-260°C) thermostat.
- 60-minute electric countdown timer with alarm.

Cook-n-Hold -AH Package:

- Solid state 150-500°F (66-260°C) thermostat.
- 24-hour digital countdown timer with alarm.
- Programmable HOLD feature.
- Intermittent Fan Operation (IFO).

Gas Convection Ovens — Bakery Depth

Standard Features:

- S/S Front, sides and top with the remaining exterior black.
- 24" (610mm) Gusset-style legs, Black.
- Porcelainized 16 gauge steel interior with S/S doors: Oven interior dimensions: 27"W x 27"D x 20-1/2"H. Accepts 18" x 26" (457 x 660mm) pans length or sideways.
- Five oven racks and 9-position rack guides.
- Vertical opening doors with windows 115A, 2-115A, 2-115B (lower oven only).
- Horizontal opening with solid S/S doors 115Z, 2-115Z, 2-115B (upper oven only). 2-115C (lower oven only).
- 60-minute electric timer.
- 3" (76mm) high flue deflector, aluminized steel with S/S trim on front.
- Natural gas, 115,000 BTU/Hr. per oven section, Propane gas, 90,000 BTU/Hr. per oven section, 115A, 115Z, 2-115A, 2-115Z, 2-115B, 2-115C. Natural and Propane gas, 70,000 BTU/Hr. per section, 70A, 70Z, 2-70A, 2-70Z, 2-70B, 2-70C.
- Electrical connection: 120VAC/60Hz/1Ph, 6' (1829mm) cord with three prong (grounding) plug.
- Oven motor: Single speed, 3/4 HP, 3.4 amps.

115A

2-115A (Shown with optional casters.)

Model #	Door Style	BTU's/Hr.	Ship Wt. (lbs.)
Single Ovens, Full-Size		**38-1/4"W x 39-1/2"D (972 x 1003mm)**	
70A	Vertical	70,000	660
70Z	Horizontal	70,000	660
115A	Vertical	115,000	660
115Z	Horizontal	115,000	660
Double Ovens, Full-Size		**38-1/4"W x 39-1/2"D (972 x 1003mm)**	
2-70A	Vertical	70,000 ea.	1,320
2-70Z	Horizontal	70,000 ea.	1,320
2-115A	Vertical	115,000 ea.	1,320
2-115Z	Horizontal	115,000 ea.	1,320

70/115 Control Panel.

Control Panel Features:

- Power- Oven cool-down fan-ON switch.
- Automatic fan cutoff when door is opened (except in cool-down).
- Momentary-ON interior light switch.
- 60-minute electric countdown timer with alarm.

-E Suffix:

- Snap-action electric 150-500°F (66-260°C) thermostat.
- Burner-ON indicator light.

-G Suffix:

- Throttling-type gas thermostat with 150-500°F (66-260°C) range.
- Burner-ON indicator light.

SL Gas Convection Ovens — Full Size, Bakery Depth

Standard Features:

- S/S Front, sides and top with the remaining exterior black.
- 24" (610mm) Gusset-Style Legs, Black.
- Porcelainized 16 gauge steel interior with S/S doors: Oven interior dimensions: 27"W x 27"D x 20-1/2"H. Accepts 18" x 26" (457 x 660mm) pans length or sideways.
- Five oven racks and 9-position rack guides.
- Vertical opening doors with windows.
- 3" (76mm) high flue deflector, aluminized steel with S/S trim on front.
- Natural & Propane gas, 70,000 BTU/Hr. per oven section.
- Electrical connection: 120VAC/60Hz/1Ph, 6' cord (1829mm) with three prong (grounding) plug.
- Oven motor: Two speed, 1/2 HP.

Note: Solid state standard controls (AH) include Cook-n-Hold and fan delay features. Programmable (AP) includes standard features plus a 5 program menu pad which controls timer and temperature.

SL70AP

SL2-70AP

Model #	Description	BTU's /Hr.	Ship Wt. (lbs.)
Solid State Control, Single Ovens		**38-1/4"W x 39-1/2"D (972 x 1003mm)**	
SL70AH	With Cook-n-Hold	70,000	675
SL70AP	Programmable Controls	70,000	675
SL115AH	With Cook-n-Hold	115,000	675
SL115AP	Programmable Controls	115,000	675
Solid State Control, Double Ovens		**38-1/4"W x 39-1/2"D (972 x 1003mm)**	
SL2-115AH	With Cook-n-Hold	230,000	1,370
SL2-115AP	Programmable Controls	230,000	1,370
SL2-70AH	With Cook-n-Hold	140,000	1,370
SL2-70AP	Programmable Controls	140,000	1,370

Cook-n-Hold AH Package Control Panel.

Programmable AP Package Control Panel.

Control Panel Features:

- Power/Fan speed control.
- Automatic fan cutoff when door is opened (except in cool-down).
- Momentary-ON interior light switch.
- Burner-ON indicator light.

Cook-n-Hold -AH Package:

- Solid state 150-500°F (66-260°C) thermostat.
- Programmable 140-200°F (60-93°C) HOLD feature.
- Precise RTD platinum temperature probe.
- 24-hour digital countdown timer with alarm.
- Intermittent Fan Operation (IFO).

Programmable -AP Package:

- Five-button programmable menu pad.
- Solid state 150-500°F (66-260°C) thermostat.
- Programmable 140-200°F (60-93°C) HOLD feature.
- Precise RTD platinum temperature probe.
- 24-hour digital countdown timer with alarm.
- Intermittent Fan Operation (IFO).

EK8 (0)A

EK12A
(Shown with optional casters.)

ALL ELECTRIC

LIMITED LIFETIME DOOR WARRANTY

(Please refer to Limited Warranty for specific details.)

EK8 Half Size Ovens

Standard Features:

- S/S Front, sides and top with remaining exterior black.
- Full S/S oven interior: 14-3/4"W x 21"D x 20-1/2"H. (375 x 533 x 521mm)
- Accepts 18" x 13" (457 x 330mm) half size pans.
- 60-minute electric timer.
- Five oven racks and 9-position rack guides, bright nickel finish.
- S/S vertical opening door with window.
- Moisture vent.
- 7.5 kW per deck.
- 208 or 240V/60Hz/1 or 3Ph. (Must specify power supply. 480V not available.)
- Two speed, 1/2 HP motor.
- 4" (102mm) legs, S/S satin nickel finish.

EK12A Full Size Ovens — Standard Depth

Standard Features:

- S/S Front, sides and top with remaining exterior black.
- 24" (610mm) Gusset-Style Legs, Black.
- S/S vertical opening door with window.
- 60-minute electric timer.
- Interior oven dimensions: 27"W x 22"D x 20-1/2"H.
- Porcelainized 16 gauge steel interior with S/S doors:
- Five oven racks and 9-position rack guides, bright nickel finish.
- Moisture vent.
- 12 kW per deck.
- 208 or 240V/60Hz/1 or 3Ph.
- Two speed, 1/2 HP motor.

EK15A Full Size Ovens — Bakery Depth

Standard Features:

- S/S Front, sides and top with remaining exterior black.
- 24" (610mm) Gusset-Style Legs, Black.
- S/S vertical opening door with window.
- 60-minute electric timer.
- Interior oven dimensions: 27"W x 27"D x 20-1/2"H.
- Porcelainized 16 gauge steel interior with S/S doors: Accepts 18" x 26" (457 x 660mm) pans length or sideways.
- Five oven racks and 9-position rack guides, bright nickel finish.
- Moisture vent.
- 15 kW per deck.
- 208 or 240V/60Hz/1 or 3Ph.
- Two speed, 3/4 HP motor.

Model #	Door Style	Ship Wt. (lbs.)
Single Oven, Half-Size		**30"W x 26-3/4"D (762 x 679mm)**
EK8(N)A	Vertical with Door Hinged Left	310
EK8(O)A	Vertical with Door Hinged Right	310

Note: Specify Door Hinge: Right (O) or Left (N)

Double Oven, Half-Size		**30"W x 26-3/4"D (762 x 679mm)**
2EK8(N)	Vertical with Door Hinged Left	620
2EK8(O)	Vertical with Door Hinged Right	620

Note: Specify Door Hinge: Right (O) or Left (N)

Model #	Door Style	Ship Wt. (lbs.)
Single Oven, Full-Size — Bakery Depth		**38-1/4"W x 40-1/4"D (972 x 1022mm)**
EK15A	Vertical	585
Single Oven, Full-Size — Standard Depth		**38-1/4"W x 35-1/4"D (762 x 895mm)**
EK12A	Vertical	535
Double Oven, Full-Size — Bakery Depth		**38-1/4"W x 40-1/4"D (972 x 1022mm)**
2EK15A	Vertical	1,180
Double Oven, Full-Size — Standard Depth		**38-1/4"W x 35-1/4"D (762 x 895mm)**
2EK12A	Vertical	1,100

Item	Notes	Gas Units				Electric Units				
		R85	HX	70/ 115	SL70	EK-12	EK-15	SLEK-12	SLEK-15	EK8
Casters (Set of 4)	Single Oven (5" wheel on gusset legs)	x	x	x	x	x	x	x	x	
	Double Oven (5" wheel, 6" hgt.)	x	x	x	x	x	x	x	x	
	Double Oven (3-1/2" wheel, 4-1/2" Ht.)	x	x	x	x	x	x	x	x	
Curb Mount (Double Ovens only)	1" (25mm) Toe Base, In-Lieu-of Legs	x	x	x	x	x	x	x	x	
Doors	Solid S/S Doors (No windows)	x	x	x	x	x	x	x	x	x
	Independent Doors	x		x		x	x			
Down Draft Diverter (For direct venting)	Single Ovens — S/S	x	x	x	x					
	Double Ovens — S/S	x	x	x	x					
Drip Tray, S/S	(Place on Rack)	x	x	x	x	x	x	x	x	x
Electronic Ignition, Suffix EI	(Vertical doors only)	x	Std	x	x					
Exterior, S/S Bottom		x	x	x	x	x	x	x	x	
Fan Delay (Intermittent Operation)			AH		Std			Std	Std	
Flex Connector Kit (Hose, Disconnect & Restraining Device)	3/4" x 3' (19 x 914mm) (Natural 204,000 BTU/hr)	x	x	x	x					
	3/4" x 4' (19 x 1219mm) (Natural 185,800 BTU/hr)	x	x	x	x					
	1" x 3' (25 x 914mm) (Natural 366,200 BTU/hr)	x	x	x	x					
	1" x 4' (25 x 1219mm) (Natural 351,000 BTU/hr)	x	x	x	x					
	3/4" x 3' (19 x 914mm) (Propane 328,440 BTU/hr)	x	x	x	x					
	3/4" x 4' (19 x 1219mm) (Propane 299,140 BTU/hr)	x	x	x	x					
	1" x 3' (25 x 914mm) (Propane 589,600 BTU/hr)	x	x	x	x					
	1" x 4' (25 x 1219mm) (Propane 565,600 BTU/hr)	x	x	x	x					
Heat Shield Kits (per deck)	1" Air Gap	x	x	x	x	x	x	x	x	
	Insulated 2"	x	x	x	x	x	x	x	x	
Legs	Gusset-style Legs, S/S. (Set of 4) In-lieu-of standard Black gusset legs. 24" Black gusset legs. 24"	x	x	x	x	x	x	x	x	
Manifold Assembly - Universal	1" / 3/4" (25mm / 19mm) NPT	x	x	x	x					
Modular Stand	S/S Front, Sides & Lower Shelf	x	x	x	x	x	x	x	x	x
	Rack Guides — 9 position	x	x	x	x	x	x	x	x	
Motor — Two-Speed:	All ovens	Std	Std	x	Std	Std	Std	Std	Std	Std
480 Volt/3Ph- Electric						x	x	x	x	
3 Phase/Gas Ovens	with Magnetic Starter supplied by others			x						
	with Magnetic Starter	x		x						
Oven Interior	Full S/S including fan baffle. (ACS)	x	x	x	x	x	x	x	x	Std
Oven Racks	Standard (8#)	x	x	x	x	x	x	x	x	
	Standard (2#)									x
Rack Guides	11-position (Oven only)	x	x	x	x	x	x	x	x	
Gastronome Pan Guides	Built-in guides									x
Security Options	ie: Prisons, etc.									
Solid State Thermostat	Not available on horizontal door ovens.	x	Std	x	Std	x	x	Std	Std	
Stacking Kit	Use pricing for single oven plus Stacking Kit Price. Advise serial number of existing oven. Mark Order: To be bottom section of double deck.									

THE MONTAGUE COMPANY

1830 Stearman Avenue
Hayward, CA 94545
800-345-1830
www.montaguecompany.com

Commercial Kitchen Equipment Parts

Find more Montague equipment resources at

parthubz.com/equipment/montague

Need parts or service?

Call 833-700-8006

support@parthubz.com

parthubz.com