Commercial Kitchen Equipment Parts

MONTAGUE EK15A

Montague EK15A document

Provided by PartHubz

parthubz.com

833-700-8006 | support@parthubz.com

INSTRUCTION MANUAL

MONTAGUE VECTAIRE EK

Electric Convection Ovens

MODELS:

EK-15A & 2EK-15A

These instructions should be read thoroughly before attempting installation.
Set up and installation should be performed by qualified installation personnel.

Keep area around appliances free and clear from combustibles.

PLEASE RETAIN THIS MANUAL
FOR FUTURE REFERENCE.

THE MONTAGUE COMPANY
1830 Stearman Avenue
P.O. BOX 4954
Hayward, CA 94540-4954
TEL: (510) 785-8822 FAX: (510) 785-3342

IMPORTANT

TABLE OF CONTENTS

Important (Cautions and Warnings) ..... **Page 1 - 2**

Installation ..... **Page 3 - 6**

Operation ..... **Page 7**

Cooking Hints ..... **Page 8 - 14**

Maintenance ..... **Page 15 - 17**

Maintenance Schedule ..... **Page 18**

Services ..... **Page 19 - 21**

Exploded View ..... **Page 22**

Exploded View Parts List ..... **Page 23**

Wire Diagram ..... **Page 24 - 26**

SHIPPING DAMAGE CLAIM PROCEDURE

For your protection, please note that equipment in this shipment was carefully inspected and packed by skilled personnel before leaving the factory. The transportation company assumed full responsibility for safe delivery upon acceptance of this shipment.

If shipment arrives damaged:

1. VISIBLE LOSS OR DAMAGE - Be certain this is noted on freight bill or express receipt, and signed by person making delivery.
2. FILE CLAIM FOR DAMAGES IMMEDIATELY - Regardless of the extent of damage.
3. CONCEALED LOSS OR DAMAGE - If damage is unnoticed until merchandise is unpacked, notify transportation company or carrier immediately, and file “concealed damage” claim with them. This should be done within fifteen (15) days of date that delivery was made to you. Be sure to retain container for inspection.

We cannot assume responsibility for damage incurred in transit. We will, however, be glad to furnish you with the necessary documents to support your claim.

IMPORTANT

ELECTRICAL WARNINGS

WARNING

THIS MANUAL HAS BEEN PREPARED FOR PERSONNEL QUALIFIED TO INSTALL ELECTRICAL EQUIPMENT, WHO SHOULD PERFORM THE INITIAL FIELD STARTUP AND ADJUSTMENTS OF THE EQUIPMENT COVERED BY THIS MANUAL.

WARNING

READ THIS MANUAL THOROUGHLY BEFORE OPERATING, INSTALLING OR PERFORMING MAINTENANCE.ON THE EQUIPMENT.

WARNING

Failure to follow all the instructions in this manual can cause property damage, injury or death.

WARNING

Improper installation, adjustment, alteration, service or maintenance can cause property damage, injury or death.

WARNING

Electrical connections should be performed only by a certified professional.

WARNING

Electrical and grounding connections must comply with the applicable portions of the National Electric Code and/or all local electric codes. Failure to comply with this procedure can cause property damage, injury or death.

WARNING

Before connecting the unit to the electrical supply, verify that the electrical and grounding connections comply with the applicable portions of the National Electric Code and/or other local electrical codes. Failure to comply with this procedure can cause property damage, injury or death.

IMPORTANT

ELECTRICAL WARNINGS

WARNING

Before connecting the unit to the electrical supply, verify that the electrical connection agrees with the specifications on the data plate. Failure to comply with this procedure can cause property damage, injury or death.

WARNING

UL73 grounding instructions: This appliance must be connected to a grounded, metal, permanent wiring system. Or an equipment-grounding conductor must be run with the circuit conductors and connected to the equipment-grounding terminal or lead on the appliance. Failure to comply with this procedure can cause property damage, injury or death.

WARNING

Before performing any service that involves electrical connection or disconnection and/ or exposure to electrical components, always perform the Electrical LOCKOUT/TAGOUT Procedure. Disconnect all circuits. Failure to comply with this procedure can cause property damage, injury or death.

WARNING

Before removing any sheet metal panels or servicing this equipment, always perform the Electrical LOCKOUT/TAGOUT Procedure. Be sure all circuits are disconnected. Failure to comply with this procedure can cause property damage, injury or death.

WARNING

Do not operate this equipment without properly placing and securing all covers and access panels. Failure to comply with this procedure can cause property damage, injury or death.

WARNING

Do not use or store gasoline or other flammable vapors or liquids in the vicinity of this or any other appliance. Failure to comply can cause property damage, injury or death.

WARNING

In the event of a power failure, do not attempt to operate this appliance. Failure to comply can cause property damage, injury or death.

INSTALLATION

The Vectaire Electric Convection ovens are manufactured for use on the electric supply indicated on the rating plate located on the hinged panel at the bottom of your control panel. Units wired for three (3) phase service CANNOT be changed to single phase or single phase units changed to three (3) phase.

Units designated for 208 VAC will operate satisfactorily within the voltage range of 197 to 219 VAC. Units designated for 230 VAC will operate satisfactorily within the voltage range of 220 to 240 VAC.

NOTE: The oven(s) must be installed in accordance with all local and state codes.

The Vectaire ovens are produced with the best possible materials and workmanship. Proper Installation is vital if safe operation and peak performance are to be achieved.

CAREFULLY READ AND FOLLOW THESE INSTRUCTIONS.

Check For Shipping Damage

Check carton for handling damage. After carefully uncrating oven, check for "concealed" damage. Notify transportation company or carrier immediately, and file container for their inspection.

CAUTION

PROVISIONS MUST BE MADE TO ASSURE ADEQUATE AIR SUPPLY TO UNIT FOR PROPER BURNER OPERATION.

CLEARANCES

Adequate clearances must be provided in the aisle and at the side and back to allow the doors to open sufficiently to permit the removal of the racks and for serviceability. Adequate clearance for air openings into the combustion chamber must be provided.

Care must be taken to prevent the motor from overheating. A minimum of one inch (2.54 cm) clearance must be maintained behind the motor to provide air circulation.

The following is the minimum clearance from combustible material and non-combustible material.

6" LEGS: SUITABLE FOR INSTALLATION

Location	Combustible Construction	Noncombustible Construction
Back Wall	6"	5"
Left Side	6"	0"
Right Side	6"	0"

ON COMBUSTIBLE FLOORS.. CURB MOUNT WITH 1" TOE BASE (P/N: 6024-0): FOR USE ONLY WITH NON - COMBUSTIBLE FLOORS.

ASSEMBLY

Uncrate oven and base as near final location as possible. Remove all packing material and accessories from oven interior.

Enclosed Base (Model EK-15A)

Install rack guides (if provided) in base. Place oven on base with locator tabs of base aligning with clearances provided in the bottom frame of the unit.

INSTALLATION OF RACK GUIDES IN BASE KIT NO. 04651-5 (IF PROVIDED SEE FIG. 1)

1. Set base upright and place one rack guide in position with rod extensions toward rear and through holes in back.
2. Install stop (B) behind vertical flange forming base opening.
3. Place screw through clamp (A), upper hole of base flange and stop (B). Install nut.

INSTALLATION

4. Repeat step 3 with lower hole of flange and stop. Tighten both nuts.

5. Repeat step 2, 3, and 4 for installation of other rack guide on opposite side.

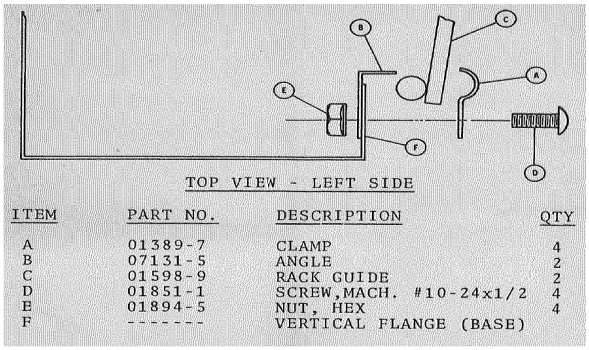

ITEM	PART NO.	DESCRIPTION	QTY
A	01389-7	CLAMP	4
B	07131-5	ANGLE	2
C	01598-9	RACK GUIDE	2
D	01851-1	SCREW,MACH. #10-24x1/2	4
E	01894-5	NUT, HEX	4
F	-------	VERTICAL FLANGE (BASE)	

(Figure 1)

MODULAR STAND

Turn modular stand frame upside down. Insert a leg into each socket (4) and firmly tighten all wing screws. Set modular stand in desired location of oven. Place oven section on stand and position oven so that locator tabs on stand engage oven bottom frame.

ATTACHING GUSSET LEGS (EK-15A)

- Uncrate oven and base as near to final location as possible.
- Remove all packing material and accessories from oven interior.
- A lift with the proper weight capacity will be needed to suspend the unit in order to install the legs.
- Hold the front leg securely and align the threaded stud on the leg with the nut located at the front corner of the accessible side.
- Insert the leg into the nut and turn the leg clockwise.
- Rotate the leg counter-clockwise slightly to align the two leg plate holes with the holes in the bottom of the oven.
- Secure the leg using the provided 3/8” bolts and washers.
- Repeat the procedure for all legs.

CASTER & CASTER RESTRAINT INSTALLATION

- The casters are available as an option to the bullet style feet (gusset legs) and also in plate style for double stacked units.
- A lift with the proper weight capacity will be needed to suspend the unit in order to install the casters.
- Remove the bullet style feet from the legs.
- Insert the locking casters into the bottom of the front legs.
- Tighten the knurled lock nut by hand until the caster is secure inside tube of leg.
- Secure the Caster Restraint Mount to the bottom of the oven directly below the gas inlet pipe. Use the hex head screws supplied.
- Insert the non-locking casters into the rear legs.
- Tighten the knurled lock nut by hand until the caster is secure inside the legs.
- Lower unit in place and lock the front casters.
- The caster restraint cable should be attached to the exposed hole in the Caster Restraint Mount.

NOTE: For an appliances equipped with casters the installation shall be made with a connector that complies with the Standard for Connectors for Movable Gas Appliances, CAN/CGA-6.16, and a quick-disconnect device that complies with the Standard for

INSTALLATION

Quick-Disconnect Devices for Use With Gas Fuel, ANSI Z21.41, or Quick Disconnect Devices for Use with Gas Fuel, Can 1-6.9.

MODEL 2EK-15A

- Screw the adjustable feet of the legs in all the way, then tightly screw the complete leg or caster assembly into the mounting holes at each corner of the lower deck (**note:** lugs on top of lower deck).
- Using a lift with the proper weight capacity, set upper deck unit in place on top of lower deck.
- Install flue riser (P/N: 6390-8) over outlets of top and bottom flues. Secure in place with the screws that are provided.
- When oven is in permanent position, level entire unit by placing a carpenter's level on the oven rack and adjusting the foot on the bottom of each leg, so that the oven is level from front to back and side to side. Level a curb mounted unit by placing shims under the low side.

ELECTRIC CONNECTION

Before making any electrical connections to the unit, check the rating plate which is located on the hinged electrical access panel located at the bottom of your control panel to make sure that the oven is being connected to the proper electrical supply. Units marked "208V" will operate satisfactorily from 197 - 219 VAC. Units marked "230V" will operate satisfactorily from 220 - 240 VAC. (See figure 2).

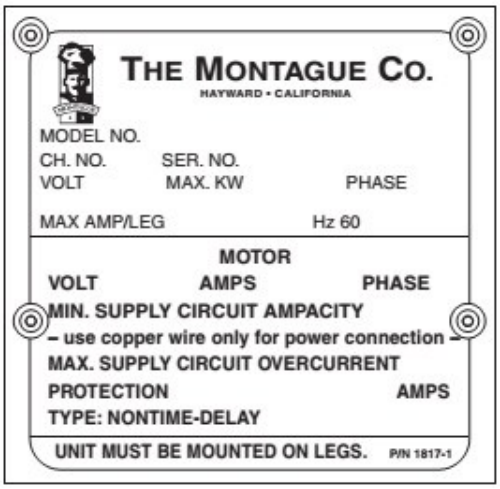

(Figure 2)

WARNING

UNITS WIRED FOR THREE (3) PHASE SERVICE CAN NOT BE CHANGED TO SINGLE PHASE, OR SINGLE PHASE UNITS CHANGED TO THREE (3) PHASE.

The electrical supply connection to the unit is made at the lower terminals of the circuit breaker. The electrical supply conduit is fed thru the 4" diameter opening in back of oven and connected to rear panel of the electrical enclosure A (See Figure 4).

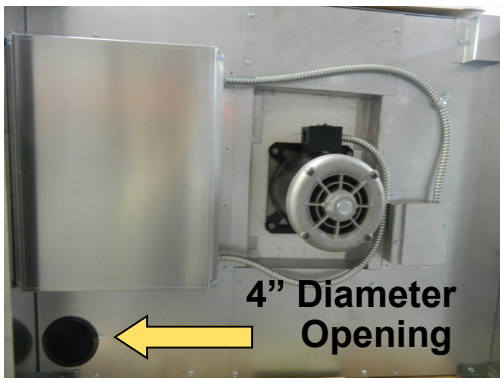

(Figure 3)

INSTALLATION

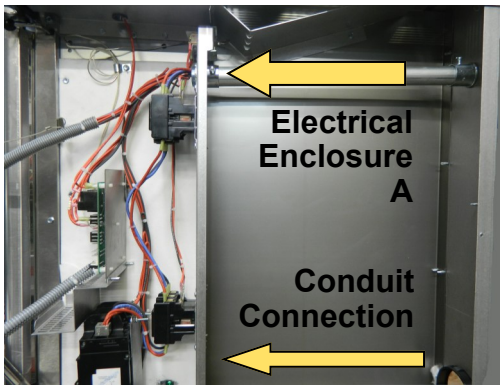

(Figure 4)

For access to electrical supply connection terminals, open control panel and remove the front portion of the right side panel B.

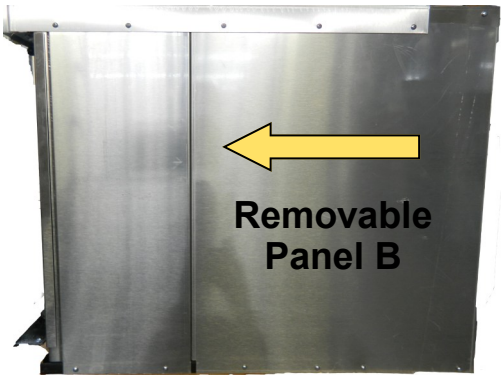

(Figure 5)

The Model 2EK-15A (double deck ovens) requires a separate electrical supply to each oven section.

IMPORTANT

THE OVEN(S) MUST BE WIRED TO GROUND. USE GREEN COLORED SCREW THAT IS PROVIDED INSIDE ELECTRICAL ENCLOSURE FOR THIS PURPOSE.

OPERATION

WARNING

THIS APPLIANCE HAS BEEN CLASSIFED AS COMMERCIAL COOKING EQUIPMENT AND MUST BE OPERATED BY PROFESSIONAL PERSONNEL.

INITIAL START

When the oven is new and before you do any cooking, operate the oven empty for at least two hours at high heat (500°F), to burn off any residuals left from manufacturing.

OPERATION INSTRUCTIONS -

MODEL EK-15A; MODEL 2EK-15A

(SEE FIGURE 6)

- Be sure power is “ON” at the main breaker to the building.
- Open the hinged “Access Panel” at bottom of control panel. Turn breaker switch to “ON” to energize controls.
- “ON/READY” indicator light will illuminate once controls are energized by breaker.
- Turn rotary fan switch to “Cool Down”, “HI”, or “Low” positions.
- Set the thermostat to the desired temperature. “Heat” indicator light will illuminate when thermostat is calling for heat. The heating elements are controlled by the thermostat, and will not operate unless the fan is running.
- Until the temperature setting is reached, the “Heat” indicator light will glow. When temperature setting is reached the “Heat” indicator light will cut off until thermostat calls for heat again.
- Opening the oven doors will cause the fan and heating elements to shut off. They will automatically resume operation when the doors are closed.

To load the oven

- Open doors and load quickly and evenly, stagger pans to allow for proper air circulation. Close doors immediately.
- Set the electrical timer to desired cooking time. (If less than 10 minutes, turn the dial past 10, then back to proper setting). Never turn past 60 as this will damage the timer mechanism.
- When time has elapsed bell will ring, but it will not shut off the oven. The buzzer will ring indefinitely until turned off by end user.
- The oven lights may be turned on momentarily by pressing the light switch and will turn off once released.

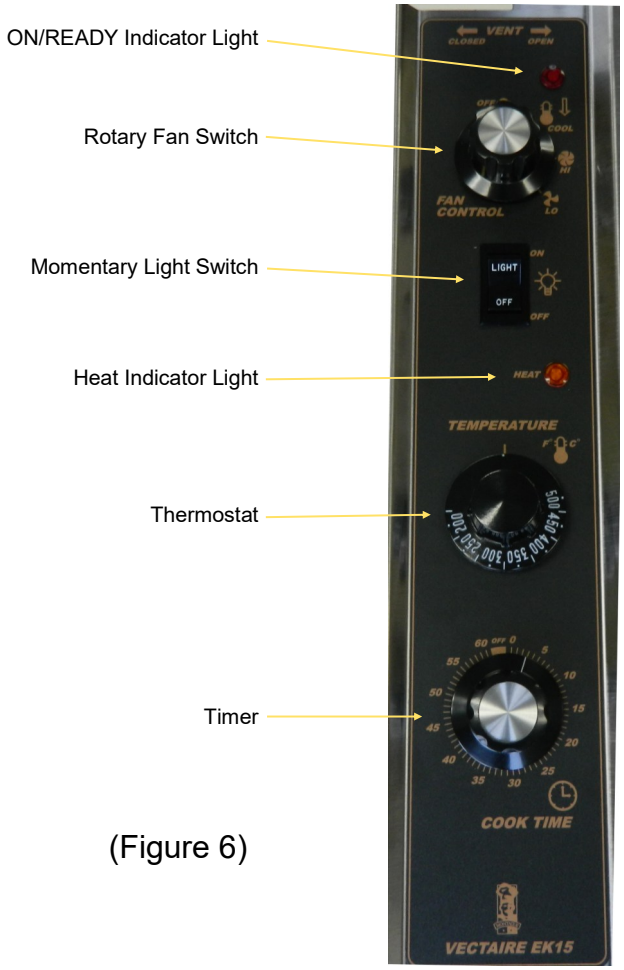

(Figure 6)

COOKING HINTS

GENERAL INFORMATION

These times and temperatures were especially prepared and tested for use in a Vectaire Convection Oven. Times, temperatures, and moisture contents may vary in other convection ovens. The suggested times and temperatures may vary considerably from those shown. They are affected by weight of load, recipes, types of pan and calibration of thermostat. Differences in quality and age of meats and fowl and quantities of shortening, milk, fat and other ingredients in baked goods affect both cooking times and temperatures.

COOKING HINTS

- Avoid recipes that would not be satisfactory in a regular conventional oven.
- Times and temperatures will vary slightly with maximum to minimum oven loads.
- Stagger pans in ovens as much as possible to allow the free flow of air.
- Pans may be tightly sealed with sheets of aluminum foil. Do not let foil touch food.
- Convection ovens usually save 1/4 to 1/3 of the total cooking time. Check product in one half of the cooking time on recipe,. Add additional time as needed.
- For most products, use a maximum of 5 racks for optimum results.
- For less browning, lower temperature; for more browning, increase temperature. If product cooks too quickly around the edges, lower temperature.
- Level pans bake more evenly than warped pans.
- Filling pans too full causes uneven baking.
- When using frozen entrees, refrigerator-thaw for best results, and cover during cooking.
- Load and unload food quickly. Close oven doors promptly.
- Type pans used affect baking time and results. Alight shiny pan reflects heat, a dark dull pan absorbs heat.
- When baking fruit pies—use a baking pan on rack and set pie tins on top of pan. This will give better bottoms and also catch spillovers.

MEAT ROASTING

For best meat roasting results you have two choices. If the time factor is more important than shrinkage, roast at same temperature you would use in conventional oven. Considerable time savings will be realized; however, shrinkage will be normal. For minimum shrinkage on beef roasts to 10 lbs., use setting of 275°F. On larger roasts use 200°F for first hour, 225°F for second hour and 275°F until done. Shrinkage may be reduced further by placing pan of water in bottom of oven.

GENERAL BAKING

In order to obtain even browning and maximum efficiency, it is absolutely necessary to use lower temperatures than in a conventional oven. As a rule of thumb, we recommend a reduction of 50°F.

COOKING CHARTS ARE GUIDES

These charts have been compiled carefully. However, you may want to cook certain foods a little more or a little less according to your preference and your recipe. Also types and sizes of pans influence baking time and temperatures.

For example: Cupcakes need much less time to bake than loaf or layer cakes. Also with a shiny roasting pan, meats take more time to toast than with a dark roasting pan.

COOKING HINTS

Guide to Time and Temperature

Product	Temperatures	Time	Racks Used
Bread, Bakery			
Bread 1lb. loaves	340 degrees F	30 mins.	3
Hamburger Rolls	300 degrees F	15 mins	5
Corn Bread (Northern)	335 degrees F	25 mins	5
Corn Bread (Southern)	375 degrees F	15-20 mins	5
Yeast Rolls	325 degrees F	25 mins.	5
Baking Soda Biscuits	400 degrees F	6 mins.	5
Raw Pies, Frozen	400 degrees F	30 mins.	
Fruit Pies	350 degrees F	45-50 mins.	
Berry Pies	350 degrees F	35 mins	
Fruit Pies	375 degrees F	30 mins.	
Fresh Apple	350-375 degrees F	25-30 mins.	
Pumpkin Pies	275 degrees F	30-35 mins.	5
Custard Pies	250 degrees F	25-30 mins.	5
Meringue Pies	350 degrees F	4 mins.	5
Apple Turnovers	350 degrees F	20 mins.	5
Fruit Cobbler	350-375 degrees F		5
Chocolate Cake	325 degrees F	20 mins.	5
Sheet Cake	325 degrees F	16-18 mins.	5
Chocolate Layer Cake	350 degrees F	18 mins.	
Strawberry Layer Cake	350 degrees F	20 mins.	
Yellow Layer Cake	350 degrees F	14 mins.	
Fruit Cakes	275 degrees F	70 mins.	3
Angel Food Cake	250 degrees F	25-30 mins.	3
Sugar Cookies	300 degrees F	15 mins.	5
Chocolate Chip Cookies	375 degrees F	7 1/2 mins.	4
Cherry Crisp	300 degrees F	25 mins.	
Cinnamon Buns	335 degrees F	20 mins.	5
Brownies	300 degrees F		5
Danish	335 degrees F	12 mins.	5
Cream Puffs	350 degrees F	20-25 mins.	5
Sweet Rolls	400 degrees F	20 mins.	

COOKING HINTS

Guide to Time and Temperature

Product	Temperatures	Time	Racks Used
Bread, Bakery			
Pizza in Pans	475 degrees F	6 mins	
Frozen TV Type Meals			
Breakfast:	325 degrees F	14 mins	
Scrambled Eggs			
Sausage Patty			
Potatoes			
Dinner TV Type Pkg.:	350-375 degrees F	14 mins.	
Meat Loaf			
Spinach			
Beans			
Lasagna	400 degrees F	60 mins.	
Lasagna, Thawed	425 degrees F	25 mins.	
Macaroni and Cheese	350 degrees F	30 mins.	
Beef Pot Pies	400 degrees F	30-35 mins.	
Turkey Pot Pies	400 degrees F	30-35 mins.	
Stuffed Peppers	350 degrees F	15-20 mins.	
Melted Cheese Sand-wiches	400 degrees F	8 mins.	
Hamburger Patties	400 degrees F	8-10 mins.	
Frozen & Wrapped	(Best when buns but-tered & wieners raw		
Meat, Poultry, Fish			
Spaghetti & Meatballs	400 degrees F	45 mins.	
Veal (Boned Rolled)	275-300 degrees F	3 hrs.	
Veal (Boned Rolled-B)	300 degrees F	3 hrs. 10 mins.	
Prime Rib	250 degrees F	1-1/2 hrs.	
Prime Rib (B) std.	250 degrees F	2-3/4 hrs.	
Top Sirloin	225 degrees F		
Steamship rd. qtr.	275 degrees F	2-3/4 hrs.	
Pot Roast	250 degrees F	4-3/4 hrs.	

COOKING HINTS

Guide to Time and Temperature

Product	Temperatures	Time	Racks Used
Meat, Poultry, Fish			
Rolled Roast (B)	275 degrees F	2-1/2 hrs.	
Top Round	200 degrees F	3 hrs.	
Cafeteria Rd.	225 degrees F	9 hrs.	
Roast (Boned Rolled)	275-300 degrees F	3 hrs.	
Steaks, N.Y.	450 degrees F	7 mins,	
Steaks, Salisbury	300 degrees F	20 mins.	
Baked Stuffed Pork Chops	375 degrees F	25-30 mins.	
Bonded Veal Roast	300 degrees F	3 hrs., 10 mins.	
Lamb Chops	400 degrees F	6 mins.	
Lobster	500 degrees F	9-12 mins.	
Stuffed	400 degrees F	6-7 mins.	
Tails	450 degrees F	7 mins.	
Baked Stuffed Shrimp	400 degrees F	6-7 mins.	
Halibut Steaks (Frozen)	350 degrees F	20 mins.	
Chicken Breast with wild rice	375 degrees F	25 mins.	
Chicken Breast	225 degrees F	35 mins.	
Chicken, Whole, Fried	350 degrees F	40 mins.	
Chicken Thighs	350 degrees F	40 mins.	
Turkey	325 degrees F	45 mins.	
Turkey, Rolled	310 degrees F	3 hrs., 45 mins.	
Idaho Potatoes	400 degrees F	50 mins.	

COOKING HINTS

Guide to Time and Temperature

Product	Temperatures	Time	Racks Used
Oven Steamed Fresh Vegetables			
Cabbage (Wedges)	400 degrees F	3 Heads (16 Wedges 40 mins.)	
Carrots (Sliced)	325 degrees F	75 mins.	
Celery (Sliced)	325 degrees F	70 mins.	
Onions (Sliced)	325 degrees F	60 mins.	
Oven Steamed Frozen Vegetables			
Beans (Green)	400 degrees F	24 mins.	
Broccoli (Spears)	400 degrees F	20 mins.	
Cauliflower	400 degrees F	30 mins.	
Corn	400 degrees F	20 mins.	
Limas (Baby)	400 degrees F	40 mins	
Peas	400 degrees F	15 mins.	

COOKING HINTS

BAKING DIFFICULTIES & PROBABLE CAUSES

Good baking is a delicate operation and many operation factors enter into it.

Pans which warp or buckle under heat always result in poor bakes. Pans with highly-polished reflecting surfaces generally cause light colored bottoms and sides. Muffin tin cups should all rest on a flat surface; otherwise, light or underdone bottoms will be the result. Pie tins that are cooked or warped will give undesirable doness.

Overproofing, working of doughs in too high room temperature, overworking pastry doughs, absence of or improper scaling and cutting and uneven baking.

“Hit or miss” recipe mixing; guess work in the matter of quality and quantity of ingredients frequently results in poor bakes.

The following are some baking problems and their probable causes:

Goods Pulled to Rear of Oven

- Oven not level. Pitched to rear cause dough to run to rear.
- Pans too full. Excess will pull over back toward fan.
- Batter has too high a percentage of liquid.

Uneven Bakes

- Insufficient heat input.
- Warped pans.
- Warped oven racks.
- Uneven loading of pan or pans.
- Fan off.
- Oven not level causing dough to run to side or rear of pan.

Spotty Pie Bottoms

- Overworked pastry.

Spotty Bread

- Overworked dough.

Burned Goods, Cripples

- Incorrect temperature.
- Thermostat out of calibrations.
- Left in too longs.
- Improper scaling.

Dried Out Goods

- Too low temperature.
- In oven too long.
- Improper mix.

Alternately Good and Poor Results

- Fan off and on.
- Improper scaling and control of ingredients.

Tops Dark, Center Not Done

- Too high temperature.

Side Burning

- Oven not level.
- Uneven loading.

Lack of Uniformity, Same Pan

- Uneven loading in pan. (See uneven bakes).
- Faulty pans.

COOKING HINTS

Lack of Spring

- Overproofing.

Incorrect temperature.

Cracked Cakes

- Too high temperature.
- Too fast cooling.

Underdone Pie Bottoms (Advisable to Bake on Cookie Sheets)

- Pastry too rich.
- Pastry too thick.
- Warped pied tins (when used on cookie sheet).

Heavily Colored Pie Rims

- Air bubbles enclosed in pastry when crimped.

Uneven Baked Cookies

- Not scaled properly.
- Pans warped.

MAINTENANCE

CAUTION

DISCONNECT POWER BEFORE CLEANING OR SERVICING. EACH OVEN SECTION HAS A SEPARATE ELECTRICAL SUPPLY CONNECTION.

GENERAL CLEANING

The complete oven should be given a periodic cleaning. Lint and grease suspended in the air tend to collect in air passages.

Remove access panel and clean any dirt or lint from all air passages and openings. Clean lint and grease accumulation from motor air openings.

Interior (Standard Porcelain Enamel Finish)

Frequent cleaning is required. Spillovers should be cleaned as soon as possible to prevent carbonization. Wait until oven is cool for complete cleaning. Usually a soap or detergent solution is strong enough to remove any grease residue. A combination of a (non-abrasive) commercial cleanser and nylon cleaning pad may be used for stubborn spillovers or stains. **Do not allow cleansers to come in contact with temperature probe.**

The racks and rack guides are readily removable for cleaning. Loosen retainer clips to disengage rack guides for removal.

Foreign matter may collect on the fan blades and reduce circulation. When this becomes apparent, remove the fan baffle and use a stiff brush on each fan blade.

Although the oven may appear clean, we recommend operating the oven at high heat for approximately two hours once every month. This will prevent build-up of solids in hard-to-see places or in the pores of the coating.

Exterior

PAINTED SURFACE

Allow equipment to cool before cleaning exterior surfaces. Painted surfaces should be cleaned using a mild soap and warm water solution on a sponge or soft cloth.

Powder coated, copper, and other such painted or plated finishes are not covered under warranty. These finishes are subject to wear and may begin to discolor and/or chip within a short period of time. Caution should be taken when cleaning. Using a mild soap and water solution will help to maintain the look and finish.

STAINLESS STEEL SURFACES

To remove dirt, grease or product residue from stainless steel, use water and a mild detergent if needed, applied with a sponge or lint-free cloth. Dry thoroughly with a lint-free cloth.

To remove grease and food splatter, or condensed vapors that have baked on the equipment, you can use a (non-abrasive) commercial cream cleanser or baking soda and water, applied with a damp lint-free cloth or sponge. Rub cleanser as gently as possible (with grain) in the direction of the polished lines. **Do not rub in a circular motion,** it will damage the finish. Rinse surface after cleaning with a damp lint-free cloth and clean water. Dry thoroughly with a clean lint-free cloth. Drying thoroughly will prevent water spots which are harmful to the finish.

MAINTENANCE

CAUTION

NEVER USE ABRASIVES, POWDERS, HARSH LIQUIDS, CAUSTICS, OR DYES AS THEY MAY LEAVE A FILM OR RESIDUE THAT WILL CLOG THE PORES OF THE SPECIAL COATING.

Precautions

- Strong bleaches tend to corrode many materials and should not come in contact with stainless steel sinks or utensils longer than 30 minutes. When these chemicals are used, the stainless should be rinsed thoroughly.
- Tincture of iodine or iron should not remain in contact with stainless surfaces. These solutions which cause stainless to discolor, should be rinsed off immediately after contact.

Some foods, such as mustard, mayonnaise, lemon juice, vinegar, salt or dressings containing these, will attack and corrode stainless. You should never store them in stainless containers.

- Ordinary steel wool pads should not used to clean stainless; particles may lodge in the surface and rust. Allowing the steel wool pad to rest on a stainless surface may cause a rusty appearance. For difficult cleaning jobs such as removing burned-on foods, nylon “sponges” or pads are recommended. When cleaning a highly polished, mirror finish, a nylon pad should be used to avoid scratching the finish.
- Gritty, hard abrasives will mar a stainless finish and are not recommended.
- Sharp knives or choppers usually have hard carbon steel edges and will leave their mark on stainless surfaces.

With only a little care, your stainless steel equipment and utensils will remain clean and bright for years to come. Stainless is hard, rust -resisting metal that adds beauty and luster to countless household products.

Helpful Hints

- To remove streaks, rub stainless steel surface with olive oil.
- To clean and polish, simply moisten a lint-free cloth with undiluted white or cider vinegar and wipe clean. Vinegar can also be used to remove heat stains.
- Oil from fingerprints can etch or tarnish stainless steel, especially mirror-polished finishes. Wherever stainless steel is visible, use a glass cleaner to remove fingerprints at the end of the day, before the finish is permanently damaged.

ELECTRIC FAN MOTOR

The customized electric fan motor has been specially manufactured for this application and should under normal conditions give years of trouble-free service.

The motor is supplied with permanently lubricated sealed bearings which require no additional lubrication. A high temperature grease has also been used to increase bearing life and should only be replaced by a qualified servicer.

The motor is also equipped with a built-in thermal overload protector which will warn of any overheating.

The motor is an open drip-proof type and car should be taken to see that the ventilation openings remain clear.

If problems begin to develop with the motor, contact your nearest authorized service company, and do not attempt repairs yourself. This is special piece of equipment and should only be service by persons familiar with the construction.

MAINTENANCE

CAUTION

CARE SHOULD BE USED WHEN WASHING DOWN EQUIPMENT TO KEEP WATER AND CLEANING SOLUTIONS OUT OF THE MOTOR OR DAMAGE WILL OCCUR.

Blower Wheel

Blower wheel should be inspected and cleaned as needed to ensure proper air circulation that will result in even heating.

Door Seals

Door seals should be periodically inspected and adjusted as needed to prevent pre-mature component failure as well as Inconsistent heating and temperature fluctuation caused by leaking seals.

Turnbuckles

Turnbuckles should be periodically lubricated to prevent binding. A food grade oil can be used to lubricate.

NOTE: The motor should be periodically cleaned of grease, debris, and lint. Keep vent clean for peak performance.

NOTE: Lack of maintenance may result in premature component failure.

MAINTENANCE

Product Maintenance Schedule												
Components	**Jan**	**Feb**	**Mar**	**Apr**	**May**	**June**	**July**	**Aug**	**Sept**	**Oct**	**Nov**	**Dec**
Door Seals	1,3	1,3	1,3	1,3	1,3	1,3	1,3	1,3	1,3	1,3	1,3	1,3
Motor	1,2			1,2			1,2			1,2		
Door Bearings	1,5			1,5			1,5			1,5		
Thermostat						1,3						1,3
Door Switch	1,3			1,3			1,3			1,3		
Turn Buckles	1,3,5			1,3,5			1,3,5			1,3,5		
Fan Switch	1			1			1			1		
Blower Wheel	1,2	1,2	1,2	1,2	1,2	1,2	1,2	1,2	1,2	1,2	1,2	1,2
Timer						1						1
Oven Racks	2	2	2	2	2	2	2	2	2	2	2	2
Contactors						1						1
Circuit Breaker						1						1

(1) Inspect (2) Clean (3) Adjust (4) Replace (As Needed) (5) Lubricate

*NOTE: Lack of maintenance may result in pre-mature failure of components.

*NOTE: Parts marked with * should be cleaned daily.

SERVICE

When service is needed, contact a local service company, dealer, or factory to perform mechanical maintenance and repairs. These instructions are intended for use by competent service personnel only.

WARNING

DISCONNECT POWER BEFORE DOING ANY SERVICE WORK. EACH OVEN HAS A SEPARATE ELECTRICAL SUPPLY CONNECTION.

MAIN CIRCUIT BREAKER SWITCH

This switch is located behind the hinged access panel located at the bottom of the control panel. Open access panel by lifting from bottom of panel. To replace the switch:

1. Turn off the main source of electrical power to the oven(s), the main breaker to the building.
2. Open control panel and remove front side panel to access the circuit breaker.
3. Remove line wires from the bottom of the switch.
4. Remove the load wires on top of the switch.
5. Remove the two screws on the left side of the breaker. This will allow brackets and breaker to be removed (forward).
6. Remove the breaker from the bracket by taking out the 4 machine screws with nuts. To install new breaker switch reverse the above procedure. Replace the same incoming line wires in their respective positions. All load wires of the same color will go to the line (top) side of the same color. Replace the panels above and below the switch. Close the control panel and replace control knobs.

CONTROL PANEL

To remove panel for service or replacement: First, turn off the circuit breaker switch. Ease dial forward and off the thermostat stem, remove fan and timer dials by removing set screws. The light and fan switch, and indicator lights, are attached to the panel. Remove self tapping screw at top of control panel. Pull control panel down by handle at top of panel. Panel will be suspended by the retainer cable. Be careful not to damage any wires or terminal connections. Pull forward far enough to change switch or indicator lights. The “ON” and “READY” indicator lamps press into place from the front of panel. The light and fan switches are removed by pinching in the spring clamps holding them in place.

THERMOSTAT

The thermostat is of snap-action, single-line, double-break design with silver contacts and heave duty terminals. The power element consists of a stainless steel diaphragm with a capillary tube and bulb filled with a liquid having a high coefficient of expansion, provides extreme sensitivity of temperature fluctuations. Thus it will operate within very close temperature differential. Each thermostat is adjusted at the factory and calibrated on precision instruments to control temperatures accurately. Adjustment or recalibration is not needed unless the thermostat has been mishandled in transit, or changed or abused while in service.

TO CHECK CALIBRATION

1. Use a reliable thermometer (avoid laser), to determine temperature.
2. Place the lead of the thermometer in the center of the middle rack the oven.
3. Turn the dial of the thermostat to a temperature setting of 350 degrees.

SERVICE

4. For unit to cycle three times in order to allow enough time to stabilize or until several temperature readings are identical.

TO RECALIBRATE

5. Remove dial from shaft “B”

6. Turn screw “A” clockwise to decrease, and counterclockwise to increase. One-quarter (1/4) turn of screw “A” equals 35 degrees F.

After a calibration is made, let unit cycle 3 time until the temperature has stabilized, then recheck to determine whether or not the calibration has been corrected.

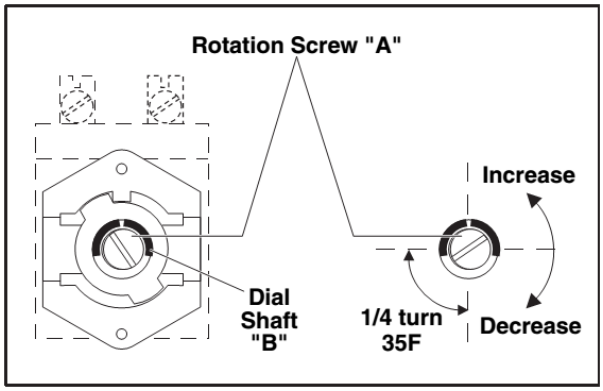

DOOR ADJUSTMENT

Procedure

1. Right hand door on oven does not close when left hand door closes. Loosen turnbuckle 1 and tighten turnbuckle 2 (See Figure A).

2. Left hand door on oven does not close when right hand door closes. Loosen turnbuckle 2 and tighten turnbuckle 1 (See Figure B).

Figure A

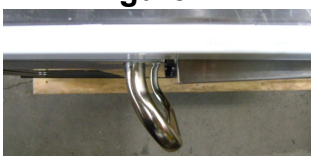

Figure B

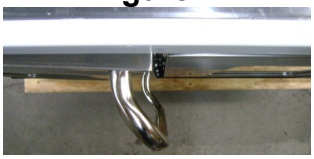

Turnbuckle 1 **Turnbuckle 2**

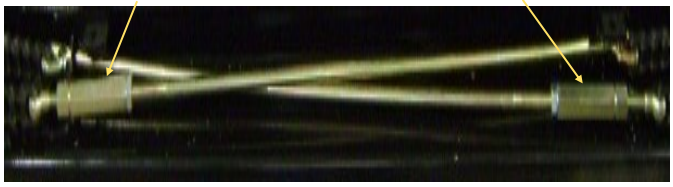

NOTE: Half turn of turnbuckle equals approximately 1/2” adjustment. When through with adjustment, both turnbuckles should be left so as to clear front fire box panel.

HIGH LIMIT CONTROL

This control is operated by a hydraulic element diaphragm which expands when the bulb temperature increases to the calibration temperature. The high limit control will actuate at a temperature of 550°F or anytime leakage develops in the hydraulic element of the control. The sensing bulb is located inside the oven alongside the thermostat sensing bulb.

TO REMOVE TIMER

This timer is located on the control panel below the oven thermostat.

To Remove or Replace

1. Remove t-stat dial, fan switch knob, and timer knob.

2. Remove self tapping screw at top of control panel.

3. Suspend panel by retainer cable. Disconnect wiring to timer.

4. Remove retainer not and washer located behind timer knob.

5. Remove timer from mounting.

6. Reverse order to reinstall.

FUSES (LIGHT AND MOTOR)

The fuses are located in a fuse holder to the left of the circuit breaker.

SERVICE

To Replace

1. Turn off the circuit breaker switch.
2. Remove t-stat dial, fan switch knob, and timer nob.
3. Remove self tapping screw at top of control panel.
4. Suspend panel by retainer cable.
5. Top two fuse holders house 5 amp fuse and bottom two fuses house 15 amp fuse for motor circuit. Push holder in and turn counterclockwise to remove.
6. Reverse order to reinstall.

Removal of Oven Interior Light Bulbs

1. **Disconnect electrical power to oven before servicing.**
2. Remove oven racks and rack guides by lifting out of holder and pulling out from oven.
3. Remove four screws holding the fan baffle and pull the panel up off the heat exchanger exit and pull the panel forward to expose the light sockets.
4. Unscrew the light cover from the socket, exposing the bulb.
5. Unscrew the bulb and replace.
6. Assemble by reversing the above procedure.

CONTACTOR

The EK-15A/2EK-15A the magnetic contactor is offered in single or three phase. Check rating plate of oven to determine the rating needed. The contactor supplies voltage to the heating elements when the thermostat calls for heat. If you hear a “Chattering” from the contactor, check contactor for condition and proper operation.

ELEMENTS

The EK-15A/2EK-15A units are supplied with either 208V or 220/240V elements.

You will experience operational difficulties if the Voltage supply to the unit is not the correct Voltage supply specified on the data plate

NOTE: Be careful when working with heating elements, not to allow terminals to make contact with each other to avoid short circuit.

PARTS VIEW

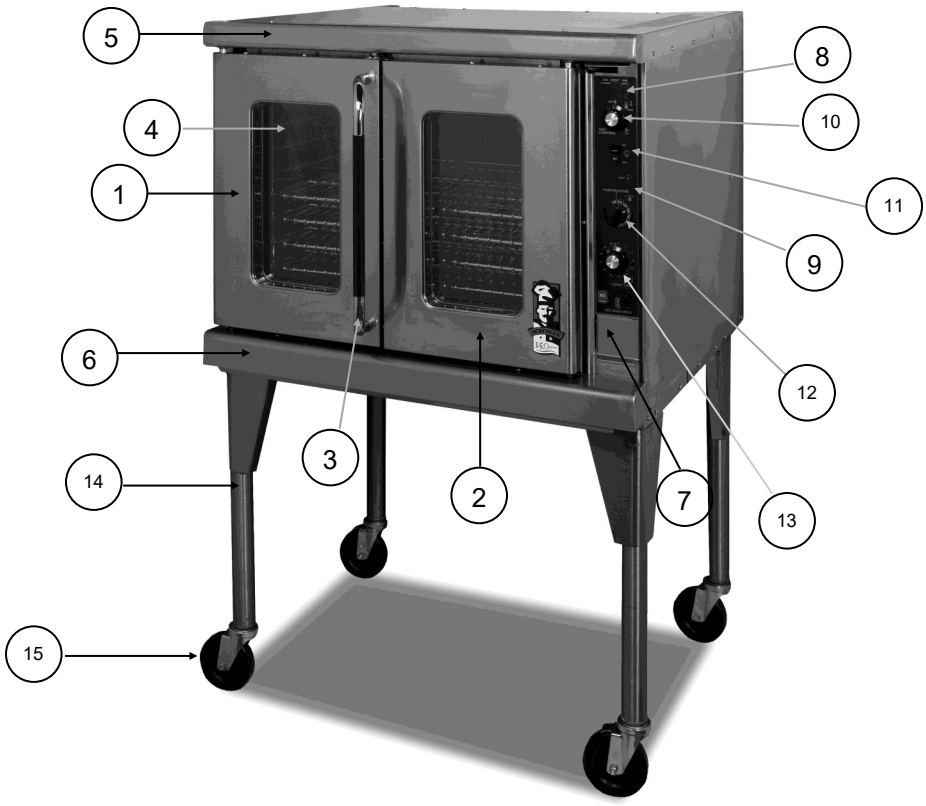

EXPLODED VIEW PARTS LIST

WIRE DIAGRAMS

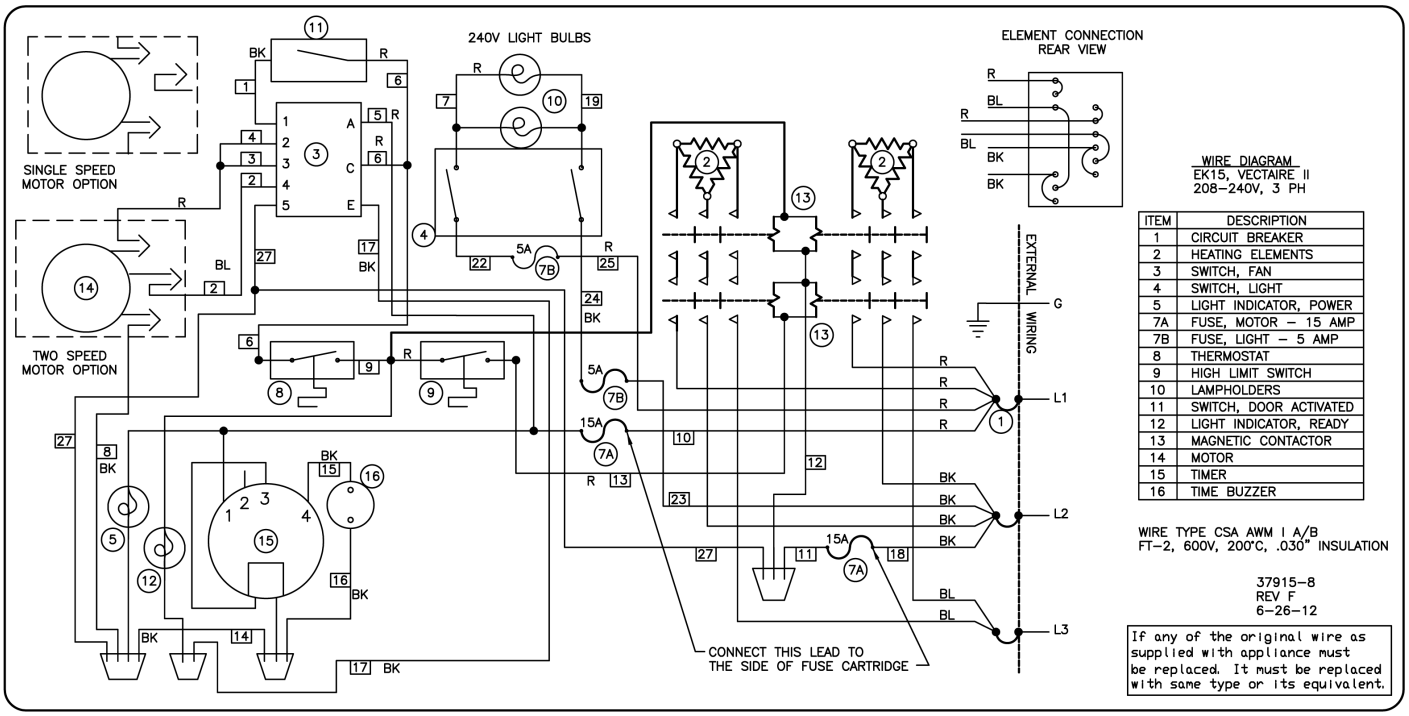

Wire Diagram # 37915-8
Vectaire II EK-15, 208-240V, 3 PH
Wire Diagram # 37916-6

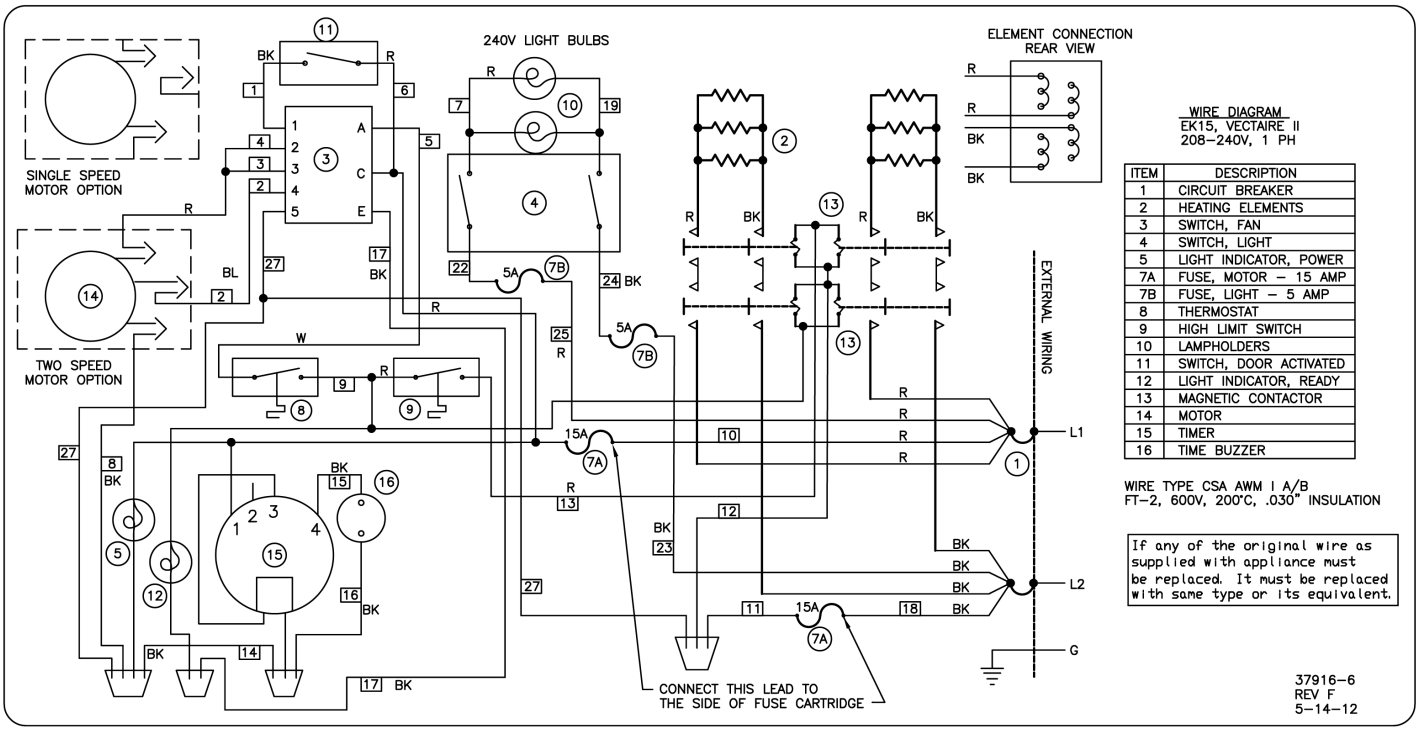

Vectaire II EK-15, 208-240V, 1 PH

WIRE DIAGRAMS

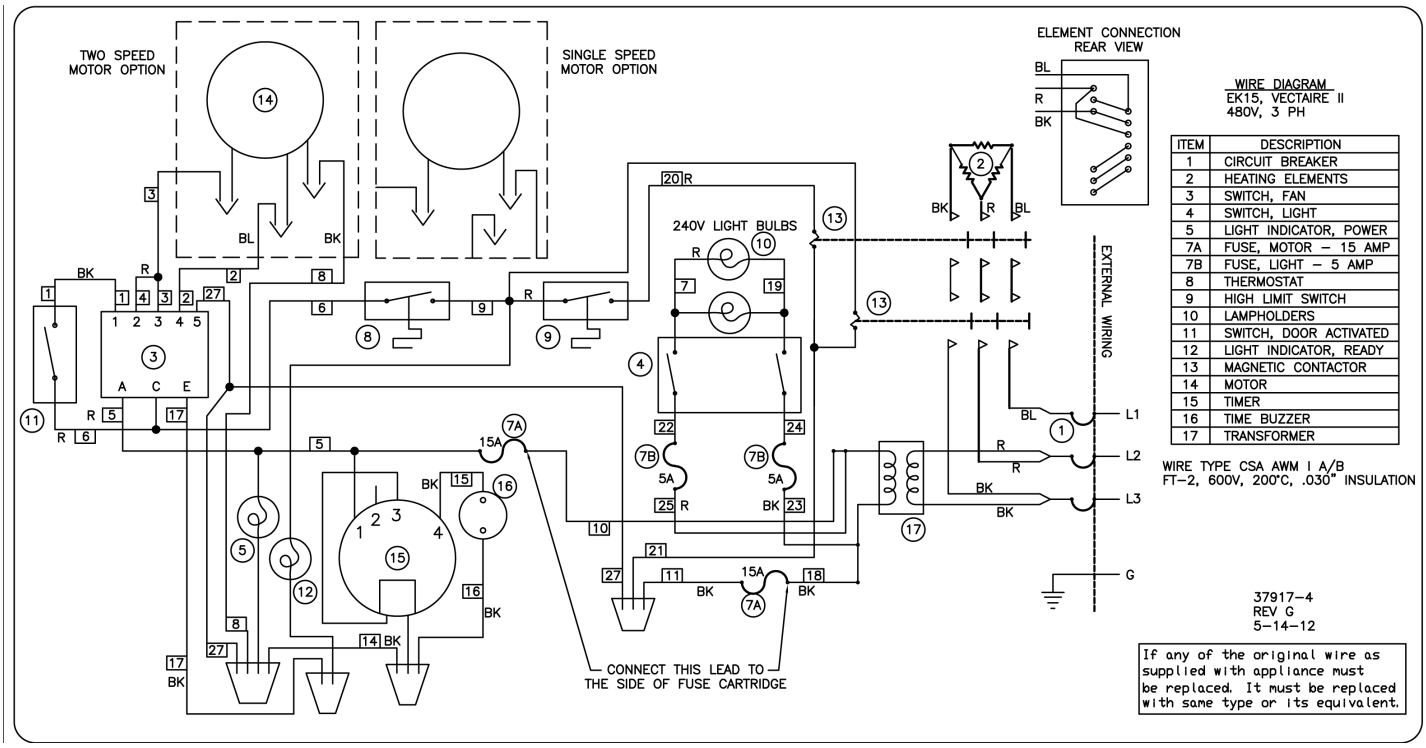

ITEM	DESCRIPTION
1	CIRCUIT BREAKER
2	HEATING ELEMENTS
3	SWITCH, FAN
4	SWITCH, LIGHT
5	LIGHT INDICATOR, POWER
7A	FUSE, MOTOR – 15 AMP
7B	FUSE, LIGHT – 5 AMP
8	THERMOSTAT
9	HIGH LIMIT SWITCH
10	LAMPHOLDERS
11	SWITCH, DOOR ACTIVATED
12	LIGHT INDICATOR, READY
13	MAGNETIC CONTACTOR
14	MOTOR
15	TIMER
16	TIME BUZZER
17	TRANSFORMER

Wire Diagram # 37917-4
Vectaire II EK-15, 480V, 3 PH
Wire Diagram # 50418-1

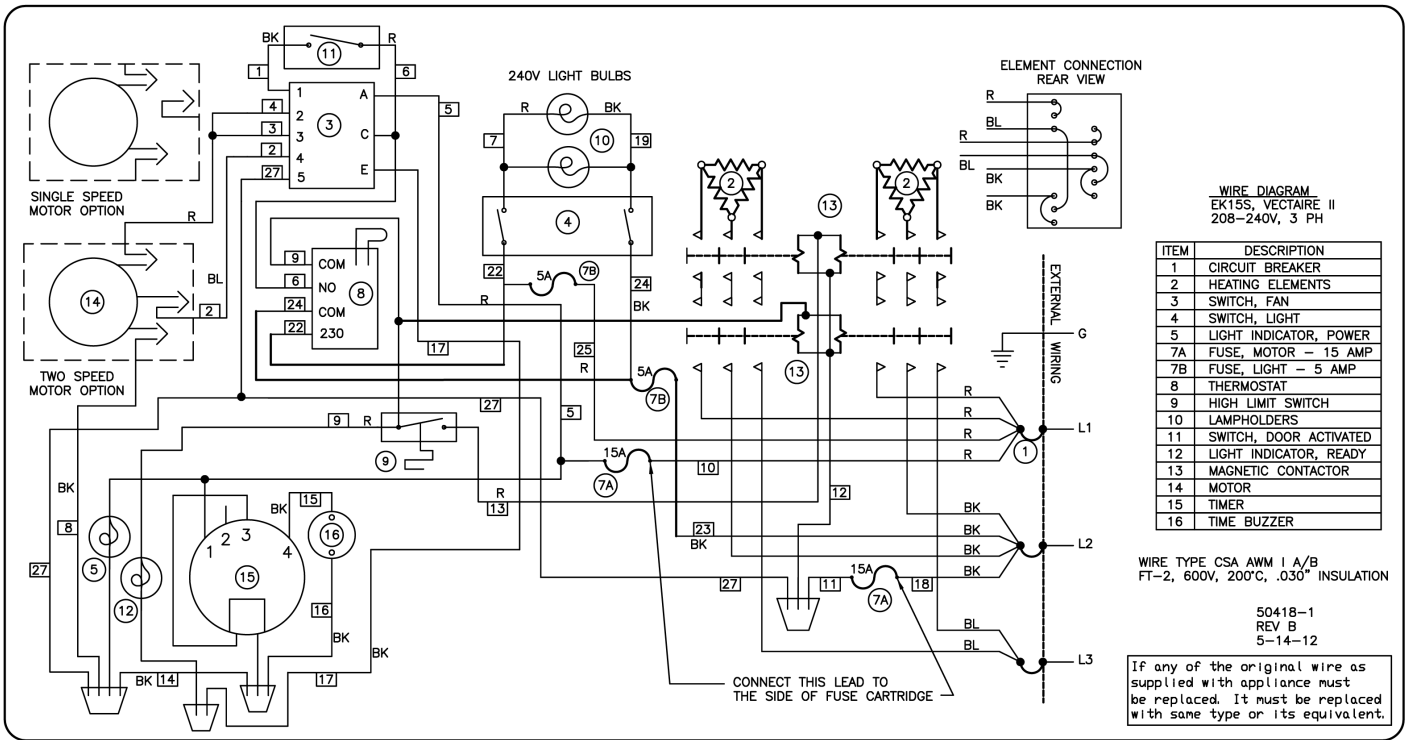

ITEM	DESCRIPTION
1	CIRCUIT BREAKER
2	HEATING ELEMENTS
3	SWITCH, FAN
4	SWITCH, LIGHT
5	LIGHT INDICATOR, POWER
7A	FUSE, MOTOR – 15 AMP
7B	FUSE, LIGHT – 5 AMP
8	THERMOSTAT
9	HIGH LIMIT SWITCH
10	LAMPHOLDERS
11	SWITCH, DOOR ACTIVATED
12	LIGHT INDICATOR, READY
13	MAGNETIC CONTACTOR
14	MOTOR
15	TIMER
16	TIME BUZZER

Vectaire II EK-15S, 208-240V, 3 PH

WIRE DIAGRAMS

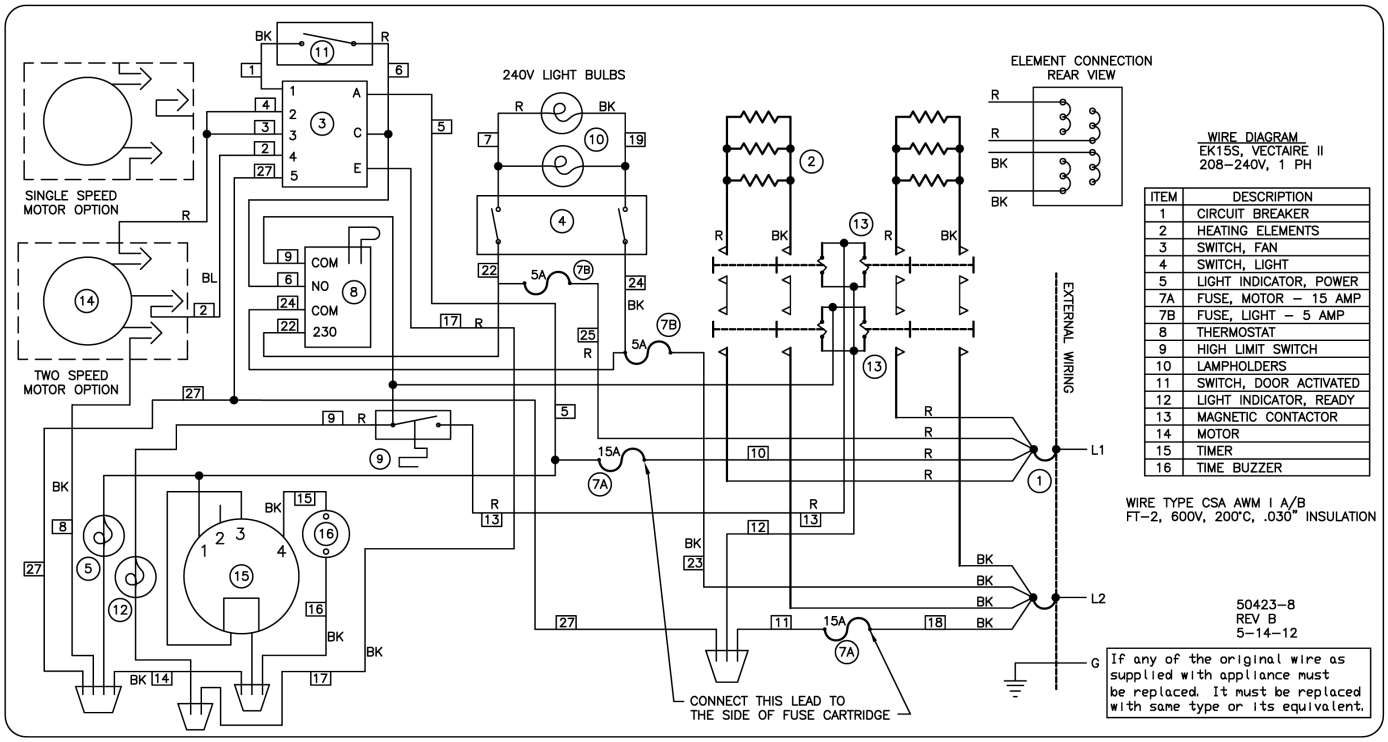

Wire Diagram # 50423-8
Vectaire II EK-15S, 208-240V, 1 PH
Wire Diagram # 50417-3

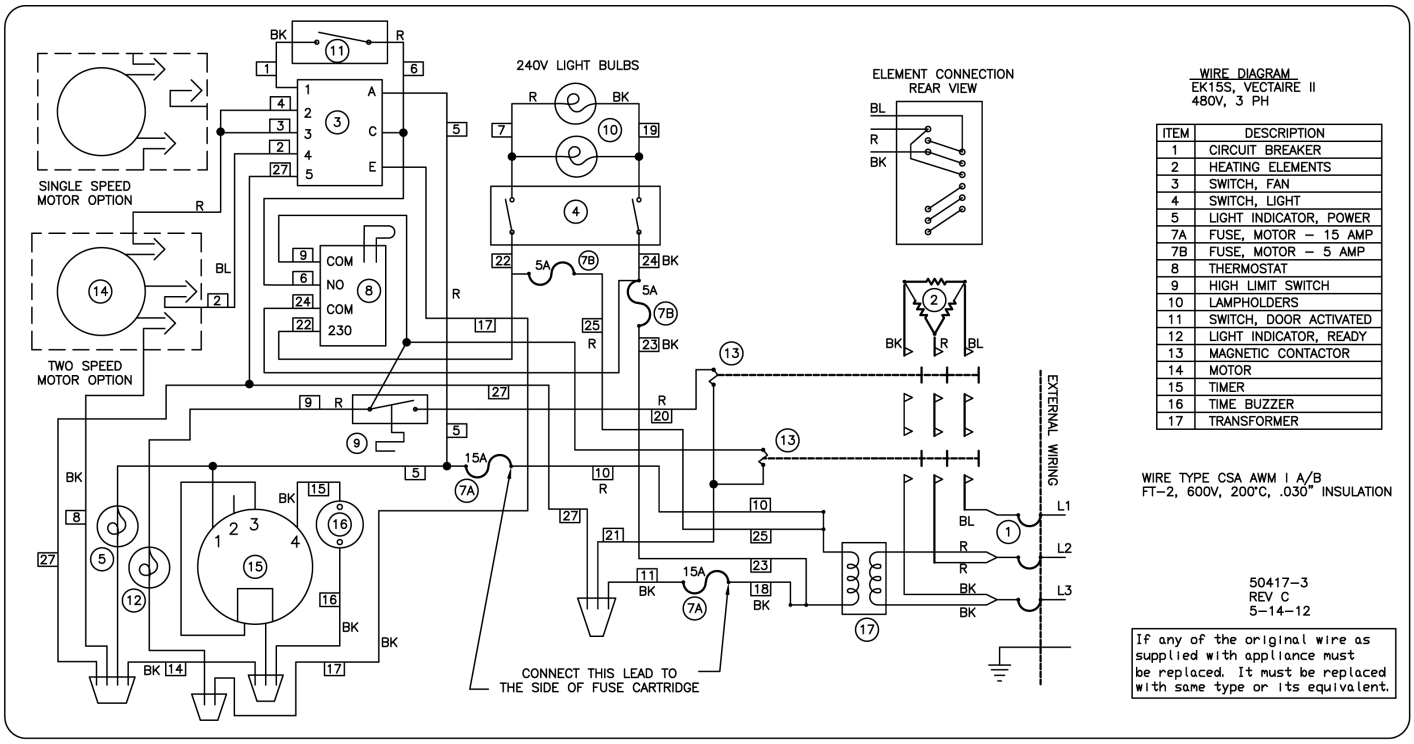

Vectaire II EK-15S, 480V, 3 PH

WARNING

If not installed, operated and maintained in accordance with the manufacturer's instructions, this product could expose you to substances in fuel or in fuel combustion which can cause death or serious illness and which are known to the State of California to cause cancer, birth defects or other reproductive harm.

The State of California enacted the California Safe Drinking Water and Toxic Enforcement Act of 1986, (Prop. 65), which "prohibits any person in the course of doing business from knowingly and intentionally exposing any individual to a chemical known to the State of California to cause cancer or reproductive toxicity without first giving clear and reasonable warning to such individuals." The Governor's Scientific Advisory Panel added carbon monoxide to the list of hazardous chemicals known to cause reproductive harm.

In order to establish full compliance with Proposition 65, we attached a yellow warning label to each gas fired unit manufactured by the Montague Company.

Carbon monoxide would not be present in concentrations that would pose a "significant risk" to the consumer when the equipment is installed, operated and maintained as follows:

1. Installed in accordance with all local codes, or in the absence of local codes, with the current National Fuel Gas Code Z223.1.

2. Installed under a properly designed and operating exhaust hood.

3. Connected to the type of gas for which the unit is equipped.

4. Proper appliance pressure regulator installed on the gas supply line and adjusted for the manifold pressure marked on the rating plate.

5. Adequate air supply to the unit.

6. The equipment is operated in the manner intended using the proper utensil for that type of appliance.

7. Keep the equipment clean and have it checked periodically.

8. Burner air adjustments, mechanical maintenance and repairs should be performed by qualified service personnel.

If the equipment is not installed, operated and maintained in accordance with the above, concentrations of carbon monoxide in excess of the established limits could present in the kitchen environment.

ALL PERSONNEL IN THE WORKPLACE WHO MAY BE SUBJECT TO ANY EXPOSURE OF CARBON MONOXIDE MUST BE WARNED OF SUCH POSSIBLE EXPOSURE. THIS WARNING SHOULD BE CONVEYED IN A MANNER SO THAT IT IS CLEARLY UNDERSTOOD BY THE EMPLOYEE, AND THE EMPLOYEE SHOULD BE ASKED IF IN FACT HE OR SHE UNDERSTANDS THE CORRECT METHOD OF OPERATION OF THE EQUIPMENT AND THAT A RISK OF EXPOSURE EXISTS IF THE EQUIPMENT IS OPERATED IMPROPERLY.

The MONTAGUE COMPANY

1830 Stearman Avenue, P.O. Box 4954 Hayward, CA 94540-4954

IMPORTANT

When ordering parts, to eliminate mistakes and facilitate deliver, always give the following information:

Serial No. _____

Model No. _____

Change No. _____

Name and Number of Part

Model No.	**Change No.**	**Serial No.**	

The Montague Company
1830 Stearman Avenue
P.O. Box 4954
Hayward, CA 94540-4954

() P/N: 4519-5 2/2014

Commercial Kitchen Equipment Parts

Find more Montague equipment resources at

parthubz.com/equipment/montague

Need parts or service?

Call 833-700-8006

support@parthubz.com

parthubz.com