Commercial Kitchen Equipment Parts

NEMCO SS1G-1

Service & Parts Manual

Provided by PartHubz

parthubz.com

833-700-8006 | support@parthubz.com

nemco® powered by ASEPT

SPECIALTY STAINLESS STEEL DISPENSERS

User Manual

Specialty Stainless Steel Dispensers

	Model	Part #
1 Gallon Jar	SS1G-1	10971
3 Gallon Bag-in-Box	SS3G-1	10972

Complete Pump

1 Gallon Pump
10433
for a 1 gallon jar

3 Gallon Pump
10453
3 gallon bag-in-box

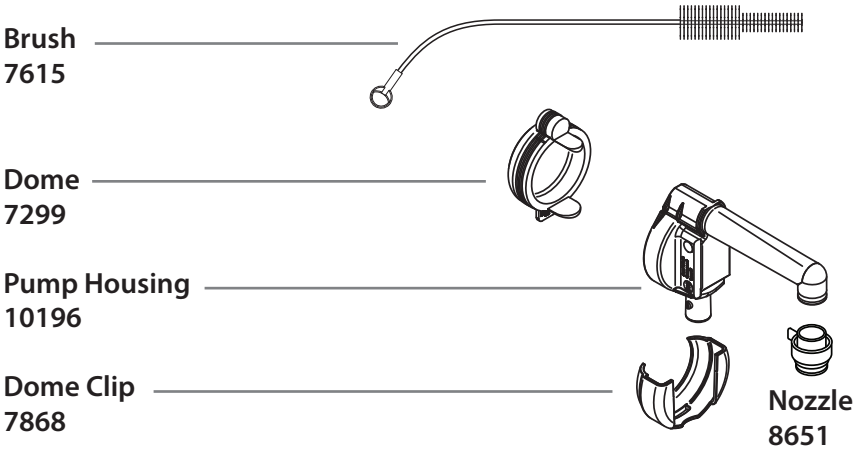

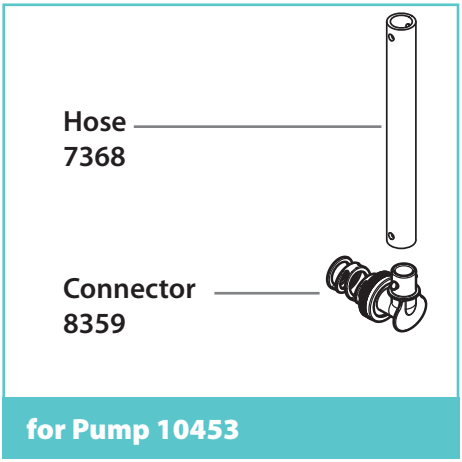

for Pump 10453

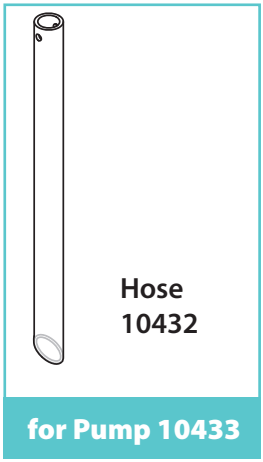

for Pump 10433

Safety

All components must be cleaned before first use.

According to food and safety regulations, most foods must be stored and/or served at certain temperatures or they could become hazardous. Check with local food and safety regulators for specific guidelines. Be aware of the product you are serving and the temperature the product is required to maintain.

IMPORTANT Clean, rinse, sanitize, and dry parts at a minimum of every 24 hours. Always comply with local sanitization requirements.

Cleaning

Disassemble all six (6) parts. Clean with soap and hot water, rinse, sanitize and dry parts according to local sanitization requirements.
Use supplied brush to scrub inside parts.

All components are dishwasher safe.

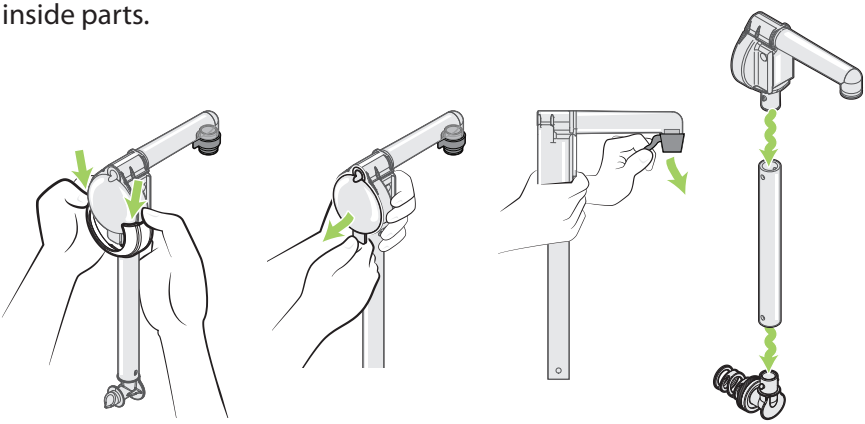

Assembly

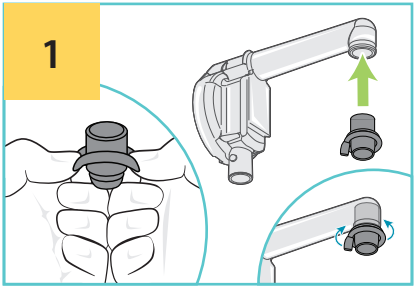

Mount the nozzle

onto the end of the pump housing.
Bend the outer portion of the nozzle inside out.
Insert into opening. Tab of nozzle faces towards housing. Flip the outer portion of the nozzle over the end of tube.

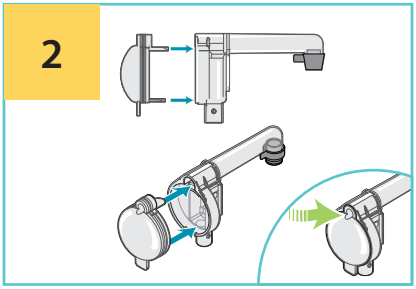

Insert dome

into the pump housing.
Ensure the flaps slide into place.
Press the entire dome firmly, including the top portion.

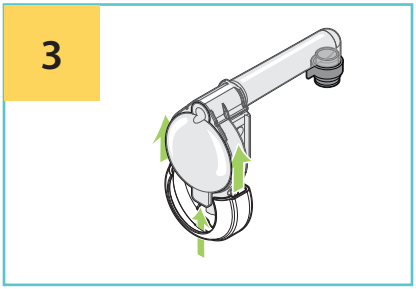

Insert the dome clip

over the dome and pump housing.
Ensure that the tab on bottom of the dome slides into the opening in the dome clip.

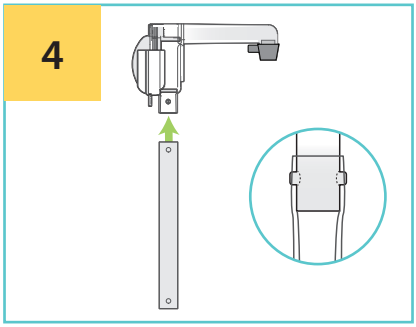

Attach hose to pump housing

Fit the holes in the hose over the pegs on the pump housing.

5

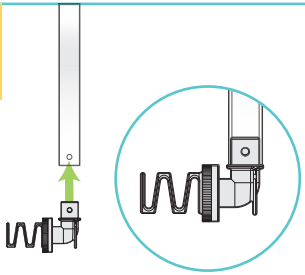

for Pump 10453

Attach connector to hose

Fit the bottom holes on hose over the pegs on the connector.
Hooped end of the connector must face away from pump housing.

6

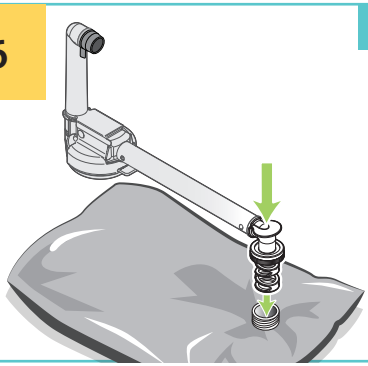

for Pump 10453

Connect pump to pouch

Put new pouch on countertop with pouch cap facing up. Remove cap from pouch. Insert hooped end of connector into center of the pouch. Twist threaded ring on connector to secure pump to pouch.

7

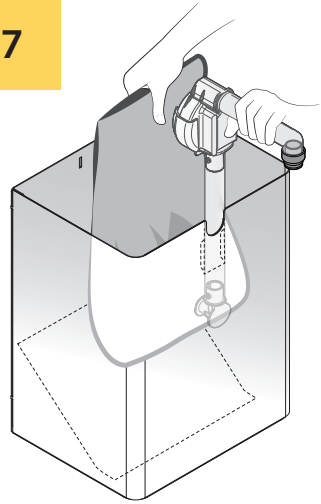

for Pump 10453

Insert pouch and pump

into the dispenser shroud. Hold end of pouch up while guiding the pump into the slots inside the front of dispenser.

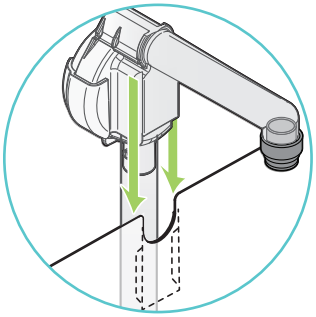

7

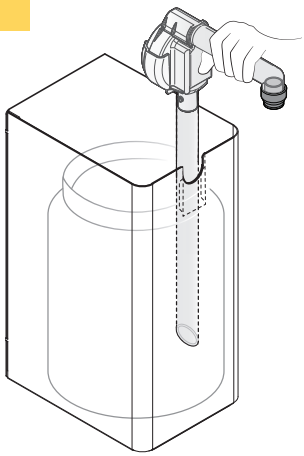

for Pump 10433

Insert jar of product

into the dispenser shroud. Insert pump hose into jar while guiding the pump into the slots inside the front of dispenser.

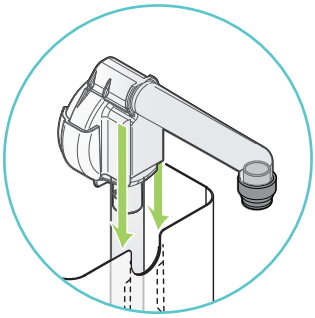

8

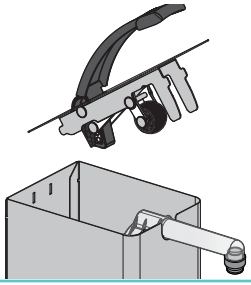

Insert the lid

Hold the lever up while inserting lid tabs into slots in back of dispenser shroud.

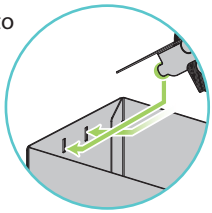

9

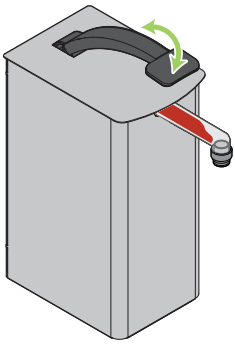

Prime pump

Press lever several times until food is visible in discharge tube.

Setting the Portion

1

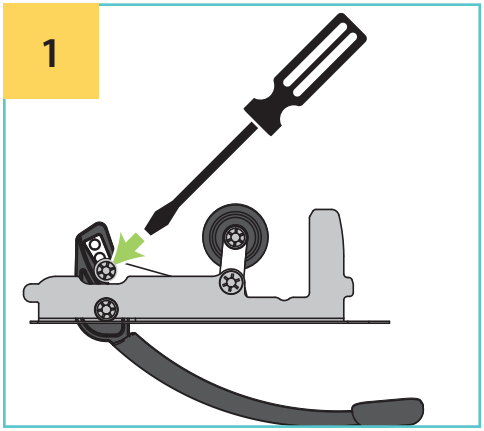

Remove locking washer

Use a flathead screwdriver to pry off the locking washer from the pin at the end of the link arms. Keep locking washer for step 4.

2

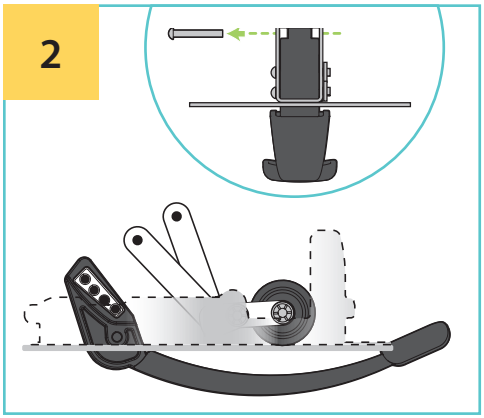

Remove pin

Slide the pin out from the pair of link arms and portion holes.

3

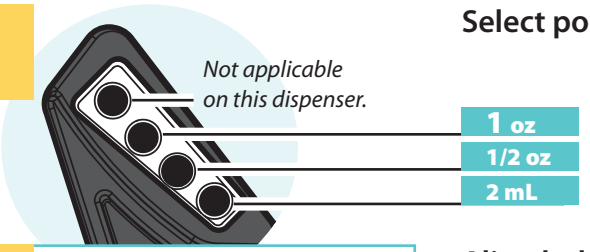

Select portion setting

4

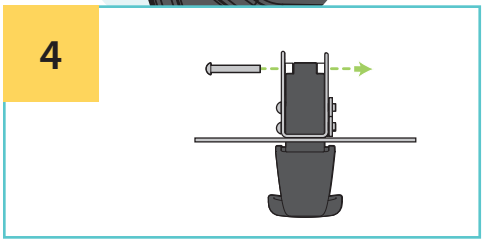

Align holes on link arms

with hole for desired portion setting. Slide pin through all. Secure pin with locking washer.

Tips & Troubleshooting

Prevent leaks:
Ensure that dome is pushed fully into pump housing.
Ensure any attached pouch is secured tightly to pump.

Pro Tip: Clean water may be used as lubrication when fitting hose onto pegs.

Optimize pouch evacuation:
Ensure ramp is in place.

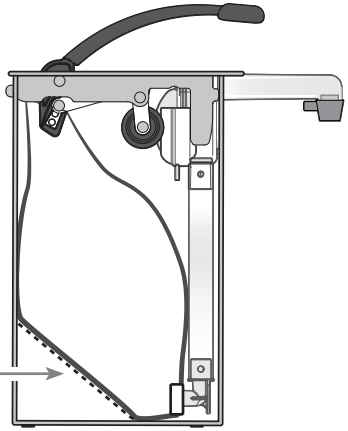

ASEPT

Asept International Inc.
900 Oakmont Ln, Suite 207,
Westmont IL 60559, USA
+1 (630) 441-5656
info.us@asept.com

Asept International AB
Traktorvägen 17, SE-226 60
Lund, Sweden
+46 46 329 700
info@asept.com

www.asept.com

Available In the USA through:

nemco® | FOOD EQUIPMENT

Nemco Food Equipment
P.O. Box 305
301 Meuse Argonne
Hicksville, OH 43526
800.782.6761

www.nemcofoodequip.com

Commercial Kitchen Equipment Parts

Find more Nemco equipment resources at

parthubz.com/equipment/nemco

Need parts or service?

Call 833-700-8006

support@parthubz.com

parthubz.com