Commercial Kitchen Equipment Parts

# NEMCO SS6L-2

## Service & Parts Manual

**Provided by PartHubz**

parthubz.com

833-700-8006 | support@parthubz.com

nemco® powered by ASEPT

# STAINLESS STEEL DISPENSERS

## User Manual

# Stainless Steel Dispensers

| | Model | Part # | | Model | Part # |
|---|---|---|---|---|---|
| Single | SS6L-1 | 10961 | Single Drop In | SS6L-1DI | 10966 |
| Double | SS6L-2 | 10962 | Double Drop In | SS6L-2DI | 10967 |
| Triple | SS6L-3 | 10963 | Triple Drop In | SS6L-3DI | 10968 |
| Quadruple | SS6L-4 | 10964 | Quadruple Drop In | SS6L-4DI | 10969 |
| Quintuple | SS6L-5 | 10965 | Quintuple Drop In | SS6L-5DI | 10970 |

# Complete Pump 10185

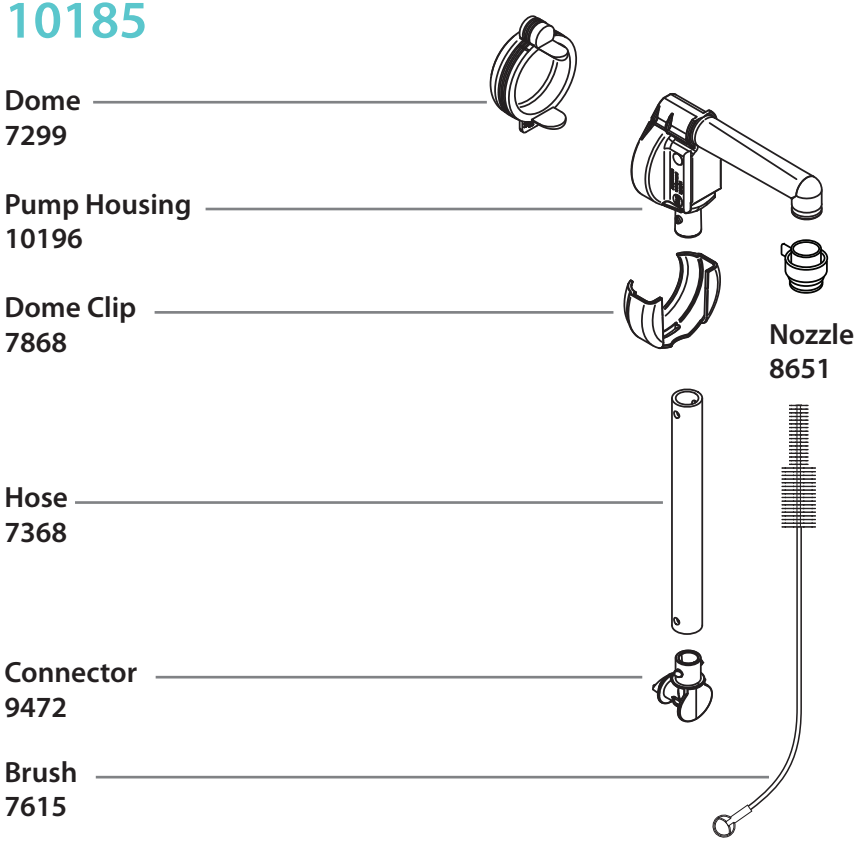


**Designed for use with standard 1½ gallon pouched condiments and toppings.**

Pumps attach to 16mm fitments in pouches.

# Safety

All components must be cleaned before first use.

According to food and safety regulations, most foods must be stored and/or served at certain temperatures or they could become hazardous. Check with local food and safety regulators for specific guidelines. Be aware of the product you are serving and the temperature the product is required to maintain.

**IMPORTANT** Clean, rinse, sanitize, and dry parts at a minimum of every 24 hours. Always comply with local sanitization requirements.

# Cleaning

Disassemble all six (6) parts. Clean with soap and hot water, rinse, sanitize and dry parts according to local sanitization requirements.
Use supplied brush to scrub inside parts.

All components are dishwasher safe.

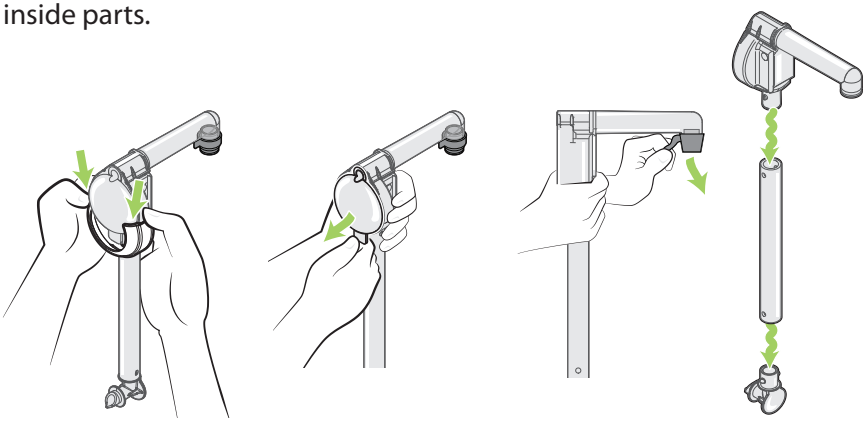

# Assembly

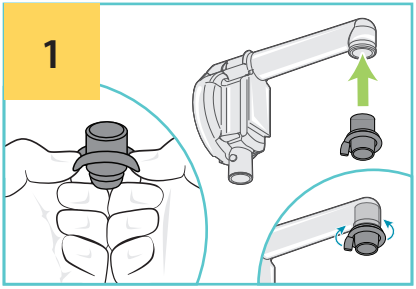


## Mount the nozzle

onto the end of the pump housing.
Bend the outer portion of the nozzle inside out.
Insert into opening. Tab of nozzle faces towards housing. Flip the outer portion of the nozzle over the end of tube.

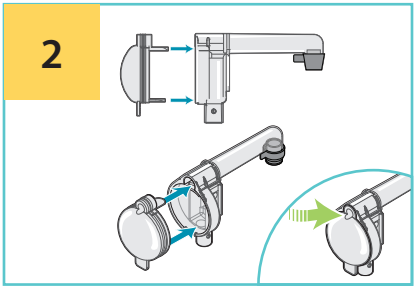


## Insert dome

into the pump housing.
Ensure the flaps slide into place.
Press the entire dome firmly, including the top portion.

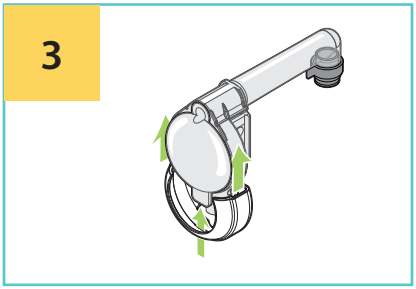


## Insert the dome clip

over the dome and pump housing.
Ensure that the tab on bottom of the dome slides into the opening in the dome clip.

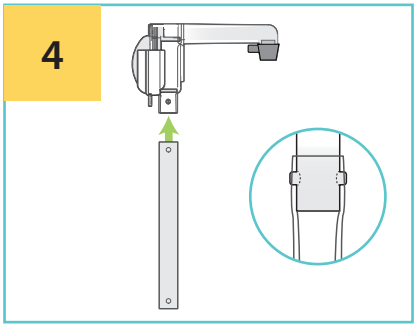


## Attach hose to pump housing

Fit the holes in the hose over the pegs on the pump housing.

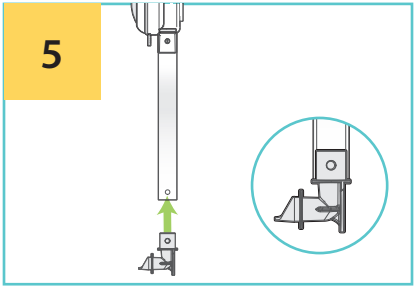


## Attach connector to hose

Fit the bottom holes on hose over the pegs on the connector.
Piercing end of the connector must face away from pump housing.

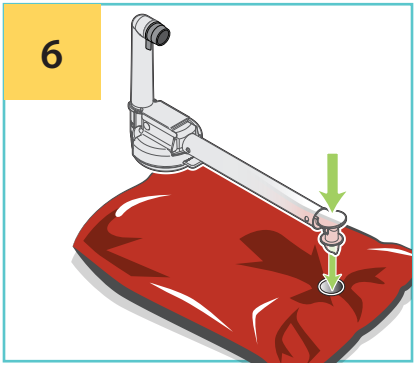


## Connect pump to pouch

Put new pouch on countertop with fitment facing up. Place piercing end of connector in center of the fitment. Push firmly until pump snaps into place.

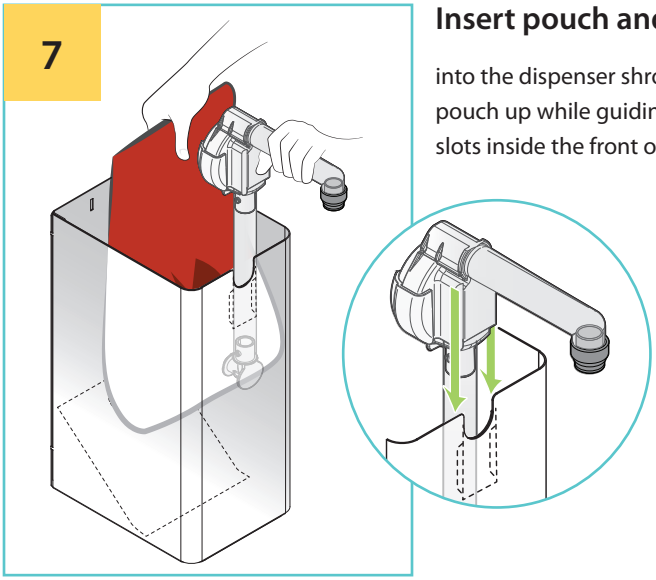


## Insert pouch and pump

into the dispenser shroud. Hold end of pouch up while guiding the pump into the slots inside the front of dispenser.

8

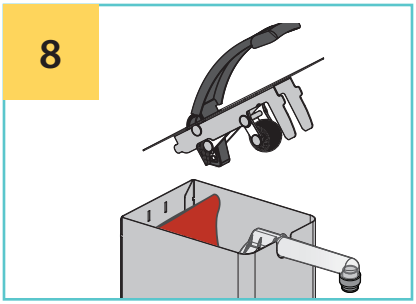

## Insert the lid

Hold the lever up while inserting lid tabs into slots in back of dispenser shroud.

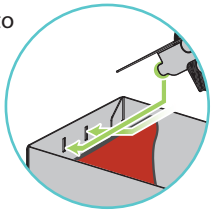

9

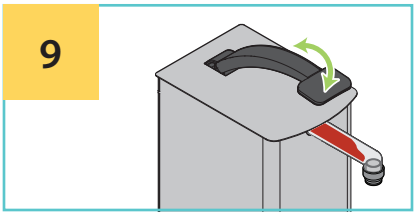

## Prime pump

Press lever several times until food is visible in discharge tube.

# Drop-In Dispensers

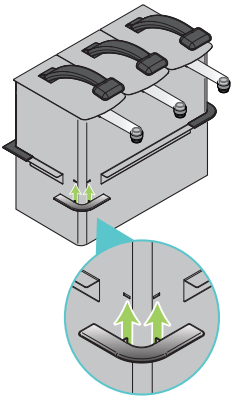

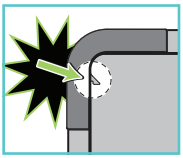

## Add Corner Guards:

**Hook** first tab into slot.

**Push firmly** on second tab to **Snap** into place.

# Dimensions for Cutout

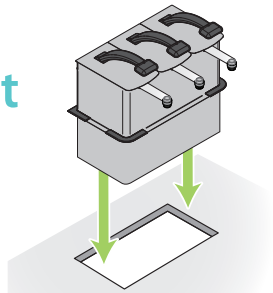

| | Width (inches) | Depth (inches) |
|---|---|---|
| Single | 6 3/8 | 8 ½ |
| Double | 11 | 8 ½ |
| Triple | 16 3/8 | 8 ½ |
| Quadruple | 21 13/16 | 8 ½ |
| Quintuple | 27 3/16 | 8 ½ |

# Setting the Portion

1

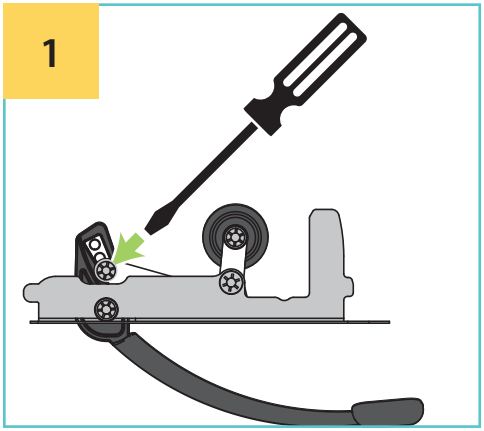

## Remove locking washer

Use a flathead screwdriver to pry off the locking washer from the pin at the end of the link arms. Keep locking washer for step 4.

2

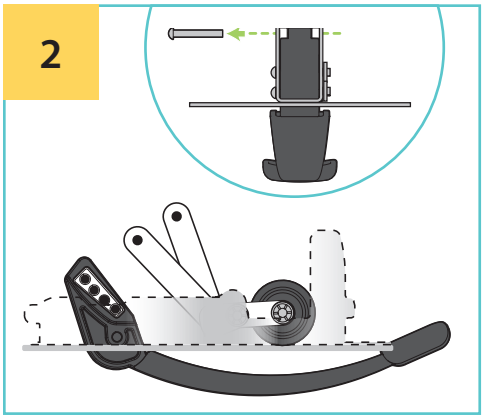

## Remove pin

Slide the pin out from the pair of link arms and portion holes.

3

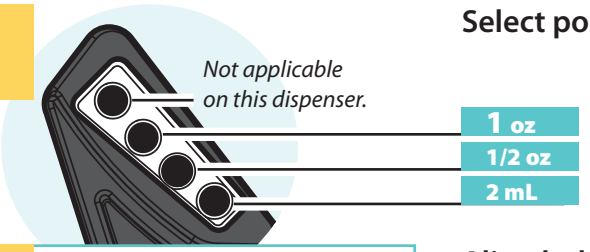


## Select portion setting

4

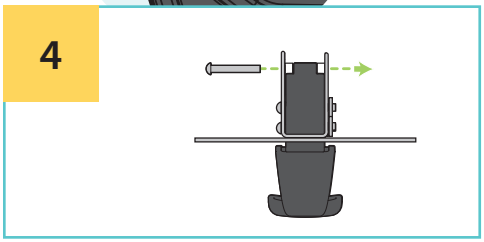

## Align holes on link arms

with hole for desired portion setting. Slide pin through all. Secure pin with locking washer.

# Tips & Troubleshooting

**Prevent leaks:**
Ensure that dome is pushed fully into pump housing.
Ensure that you hear a CLICK when attaching pump to pouch.

**Pro Tip:** Clean water may be used as lubrication when fitting hose onto pegs.

**Optimize pouch evacuation:**
Ensure ramp is in place.

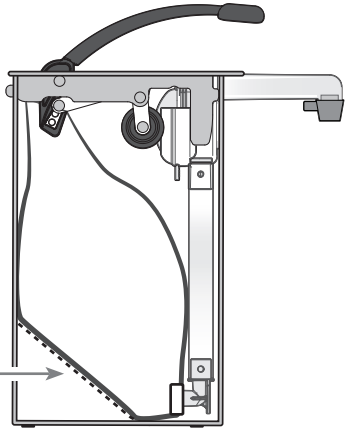

ASEPT


**Asept International Inc.**
900 Oakmont Ln, Suite 207,
Westmont IL 60559, USA
+1 (630) 441-5656
info.us@asept.com

**Asept International AB**
Traktorvägen 17, SE-226 60
Lund, Sweden
+46 46 329 700
info@asept.com

www.asept.com


Available In the USA through:

nemco® | FOOD EQUIPMENT


**Nemco Food Equipment**
P.O. Box 305
301 Meuse Argonne
Hicksville, OH 43526
800.782.6761

www.nemcofoodequip.com

Commercial Kitchen Equipment Parts

Find more Nemco equipment resources at

**parthubz.com/equipment/nemco**

---

## Need parts or service?

Call 833-700-8006

support@parthubz.com

parthubz.com