Commercial Kitchen Equipment Parts

OLIVER 703

Service & Parts Manual

Provided by PartHubz

parthubz.com

833-700-8006 | support@parthubz.com

Grand Rapids, Michigan, U.S.A. 49504-5298

USER'S OPERATING AND INSTRUCTION MANUAL

MODEL 703

CLUSTER BUN
SLICER

703S20000-CV

INDEX

Section	Page Number
Description/Specification	0703S20014
Safety Instructions	0703S20002
Setup & Operation	0703S20003
Maintenance	0703S20004
Troubleshooting	0703S20015
Replacement Parts List	0703S20016-1
Assembly Drawing	0703S20016-2
Electrical Diagram 115V	0703S20018-1
Electrical Diagram 230V	0703S20018-2
Warranty	GEN 040225
Warranty Procedure	GEN 040226
Returned Parts Policy	GEN 040227

DESCRIPTION / SPECIFICATION

Description

The Cluster Bun Slicer will slice two-wide groups of buns in a single operation leaving a hinge on the buns in the middle. Two, four, six, eight or more buns can be sliced at one time speeding the packaging process. The slicer can also be used for single bun slicing.

The Model 703 Cluster Bun Slicer has a painted, welded steel frame. The chute, blade and all other contact parts are stainless steel.

The slicer's blades are driven by two 1/3 HP, TENV, single phase, capacitor start, thermoelectrically protected motors.

Physical specifications

Size: 29-3/8" long x 23-3/4" wide x 22-3/8" high

Weight: Approx. 150 lbs.

Product Capacities:

Cluster buns 9-3/4" (max.) 4" (min.) wide x 3-1/8 (max.) high

Single buns 4-7/8" (max.) 2" (min.) wide x 3-1/8 (max.) high

Cut height above table 5/8" (min.) 1-1/2" (max.)

Hinge approximately 1/2" (all buns)

Electrical Specifications

Note: Other electric's are available (consult factory)
(2) 1/3 HP motors
1/50-60/115 12 amps standard, or 1/50-60/230 6 amps standard

OLIVER PRODUCTS COMPANY
MODEL 703 CLUSTER BUN SLICER

SAFETY INSTRUCTIONS

Every effort has been made by Oliver Products Company to provide you with a safe machine. It is essential, however, that machine operators and maintenance personnel observe the following safety precautions.

1. Before attempting to operate your slicer read this manual. Never allow an untrained person to operate this machine.

2. CAUTION! If an extension cord will be used with this slicer, the cord must be of a wire size no smaller than #14 gauge and be no longer than (5) meters, (15 feet).

3. Make sure that the machine is only connected to a properly grounded electrical supply source of sufficient capacity for the load the slicer will put on it. Always unplug the machine when it is not in use.

4. Always make sure the machine has been disconnected from the power supply before cleaning or servicing.

5. Never stick your hand or any other objects into either end of the chute. Keep your hands away from the moving parts of the machine.

6. Never attempt to adjust or service this machine until the blades have stopped.

7. All guards must be in place before starting the machine.

8. Handle knife blades with care. Do not touch the moving knives.

9. Use only proper replacement parts.

10. In addition to these general safety instructions, also follow the more specific safety instructions given for the different areas of the machine in the operating instructions.

OLIVER PRODUCTS COMPANY
MODEL 703 CLUSTER BUN SLICER

SETUP & OPERATION

Removing the Slicer from the Skid

The slicer is bolted to the skid with four 1/4-20 bolts. Using a pad to prevent damage to the finish of the slicer, carefully tip the slicer onto its side. Never pick the slicer up or attempt to move the slicer by its chute, always lift the slicer by its frame. Remember, the slicer is heavy so use proper lifting techniques to prevent personal injury. After tipping the slicer on its side remove the four bolts securing the skid and remove the skid.

Your machine was shipped with, (loose), four rubber feet and their mounting hardware. Put one foot, secured with a hex bolt and a lockwasher, at each of the brackets to which the skid was mounted. After attaching all four feet the machine may be carefully returned to its upright position.

Again using proper lifting techniques two people should be able to move the slicer to the counter or table where it will be used. Before moving the slicer it should be verified that this work surface will be able to support the full weight of the slicer.

Before attempting to operate the machine make sure that all operators have read this manual.

Adjustments

1. Adjusting Blade Height

   The blade height above the table is adjusted by altering the position of the table itself. This can be done by loosening the four-prong locking knob and then rotating the handwheel which is located below the locking knob in the direction desired. Both can be found on the front of the machine. When the table is at its lowest position you will get a bottom slice of approximately 1-1/2". At its highest position the bottom slice will be about 5/8". After setting the table at the desired height secure it in that position by retightening the locking knob.

2. Adjusting the Guides

When slicing double wide buns the guides should be set so as to center the product on the chute. Place the product in the center of the chute, loosen the knobs securing the guides and slide each to within about 1/4" of the product, retighten the knobs. As buns tend to vary in size make sure that the largest expected group of buns will slide freely down the chute and will not be caught by guides which are set to tightly.

The guides should be set in a similar fashion for slicing single buns, with the following exceptions. First the guide with the longest brackets and closed slots should be moved to its inner most position and secured. The remaining guide should then be moved into the product until you have 1/4" clearance on each side as was done on the cluster buns above.

3. Adjusting the Overhead Holddown

The overhead holddown is adjusted by turning the two knobs on the top of the machine, thus raising or lowering the holddown. Normally the holddown can only be used on product wider than 6". On product over 6" wide the holddown should be lowered to within 1/4" of the largest product to be sliced. This will allow the product to slide freely down the chute yet preventing product "hop". When slicing product below 6" in width the holddown should be moved to its upper most position out of the way of the side guides.

Operating Instructions

After the adjustments are made you are ready to begin slicing. Start the motor by turning the on-off switch to the "ON" position. Insert the product through the opening at the top of the chute and allow it to slide down the chute into the blade.

Warning Never If the buns resist sliding freely into the blade stick your hand into the chute to aid them. Instead do one of the following things.

1. Add additional buns to advance the first into slicing position.

2. Add a little flour or corn meal to the top surface of the table to aid bun movement.

Remember, if product should jam in the machine NEVER clear it with your hands, instead, turn the machine off, disconnect it from the power supply and wait until you are sure blade rotation has stopped. Then clear the machine by using some type of flat instrument (wood or plastic preferred).

Should the sliced bun stop under the discharge doors the next bun through the blade will generally dislodge it.

MAINTENANCE

Warning Never attempt to clean or service this machine until it has been disconnected from the power supply and you are sure the blades have stopped. Also remember to use care whenever you are working near the blades.

Cleaning

Use a mild detergent solution or spray cleaner on all exterior and interior surfaces as necessary. Periodically remove the overhead guard assembly and brush, or vacuum all foreign material from below the chute and from the blade compartments.

Lubrication

No lubrication is required. The motor is equipped with pre-lubricated sealed bearings which require NO lubrication--DO NOT attempt to oil or grease the motor

Changing a Blade

Warning Do not attempt to service this machine until it has been disconnected from the power supply.

1. Remove the overhead guard assembly by removing the six hex head screws which hold it in place, three on each side over the blade. Lift the assembly clear of the machine and set it one side.

2. Move each of the side guides to their inner most position and retighten their securing knobs.

3. Using an "Allen" wrench remove the three screws securing the blade to the hub and lift the blade from the machine.

4. The blade is replaced by reversing the above procedure.

5. When reinstalling the blades, make sure that the points on the teeth are pointed in the opposite direction as the rotation of the blade. Looking at the top of the motors, (shaft end), with the top of the chute in the 12:00 o'clock position, the left hand motor rotates clockwise while the right hand motor will be rotating counter clockwise.

TROUBLESHOOTING

The slicer motor(s) will not start.

- Check to see if the machine is plugged in.
- If plugged in, is the outlet working? Test it with another, working, small appliance.
- Your slicer is protected by an overload in the on/off switch. To restart allow unit to cool for approximately five minutes, press off button to reset the switch overload.
- Your slicer's motor is equipped with a thermal overload. Should the motor become overheated it will stop. To restart allow the motor to cool for approximately five minutes, then reset the overload by pressing the red button on the case of the motor.
- If you still can not find the problem have a qualified electrician check the unit's motor, motor starter, and switch.

The slicer's motor(s) was running but suddenly stopped.

- Check to see if the machine's plug was accidentally removed.
- Your slicer is protected by an overload in the on/off switch. To restart allow unit to cool for approximately five minutes, press off button to reset the switch overload.
- Your slicer's motor is equipped with a thermal overload. Should the motor become overheated it will stop. To restart allow the motor to cool for approximately five minutes, then reset the overload by pressing the red button on the case of the motor.
- If you still can not find the problem have a qualified electrician check the unit's motor, motor starter, and switch.

REPLACEMENT PARTS LIST

ITEM NO.	PART DESCRIPTION	PART NUMBER
001	Adapter-Blade	0700-0002
002	Frame-Cluster Bun Slicer	0703-0001-101
003	Key-3/16 Sq. x 1-3/8"	4384-0406-1375
004	Screw-Soc. Set 5/16-18 x 1/4	5842-6143
005	Screw-Hex Hd StSt 1/4-20 x 3/4	5843-1003
006	Screw-Soc Hd StSt 1/4-20 x 1/2	5843-1541
007	Washer-1/4 Lock StSt	5851-9357
008	Foot-Rubber	5902-0021
009	Knife-72 Tooth StSt	7107-7050
101	Table	0703-0002
102	Wheel-Thumb	0703-0003
103	Plate-Adjusting	0703-0004
104	Guide-RH	0703-0005-0001
105	Guide-LH	0703-0005-0022
106	Screw-Clamp	4560-2508-1108
107	Bearing-Bronze Thrust	5254-3507
108	Nut-StSt Elastic Lock	5831-9091
109	Screw-Hex Hd 1/4-20 x 1/2	5842-150
110	Washer-1/4 STD. WROUGHT	5851-8402
111	Washer-1/4 Lock	5851-9008
112	Washer-1/4 Flat StSt	5851-9304
113	Handle-Kipp	5908-5004
201	Guard-Overhead	0703-0006
202	Guard-Chute	0703-0007
203	Holddown-Overhead	0703-0008
204	Bearing-Bronze Flange	5254-3110
205	Nut-StSt Acorn 1/2-13	5832-0583
206	Screw-Hex Hd StSt 1/4-20 x 1/2	5843-1001
207	Washer-1/2 Flat StSt	5851-9308
208	Washer-1/4 Lock StSt	5851-9357
209	Knob-4 Prong	5911-7103
210	Spring-Compression	7015-4103
211	Channel-Rubber 8" Lg	6516-0004
301	Scale-1 thru 8	6402-8003
302	Scale-8 thru 1	6402-8004
401	Motor-1/3 HP 1-50/60-115/230	6301-1641
407	Enclosure-Switch	0705-0008-1
409	Light-Pilot (115V)	5709-0190
409	Light-Pilot (230V)	5709-0191
410	Starter-Manual 10-16A (115V)	5709-3043
410	Starter-Manual 6.3-10A (230V)	5709-3042

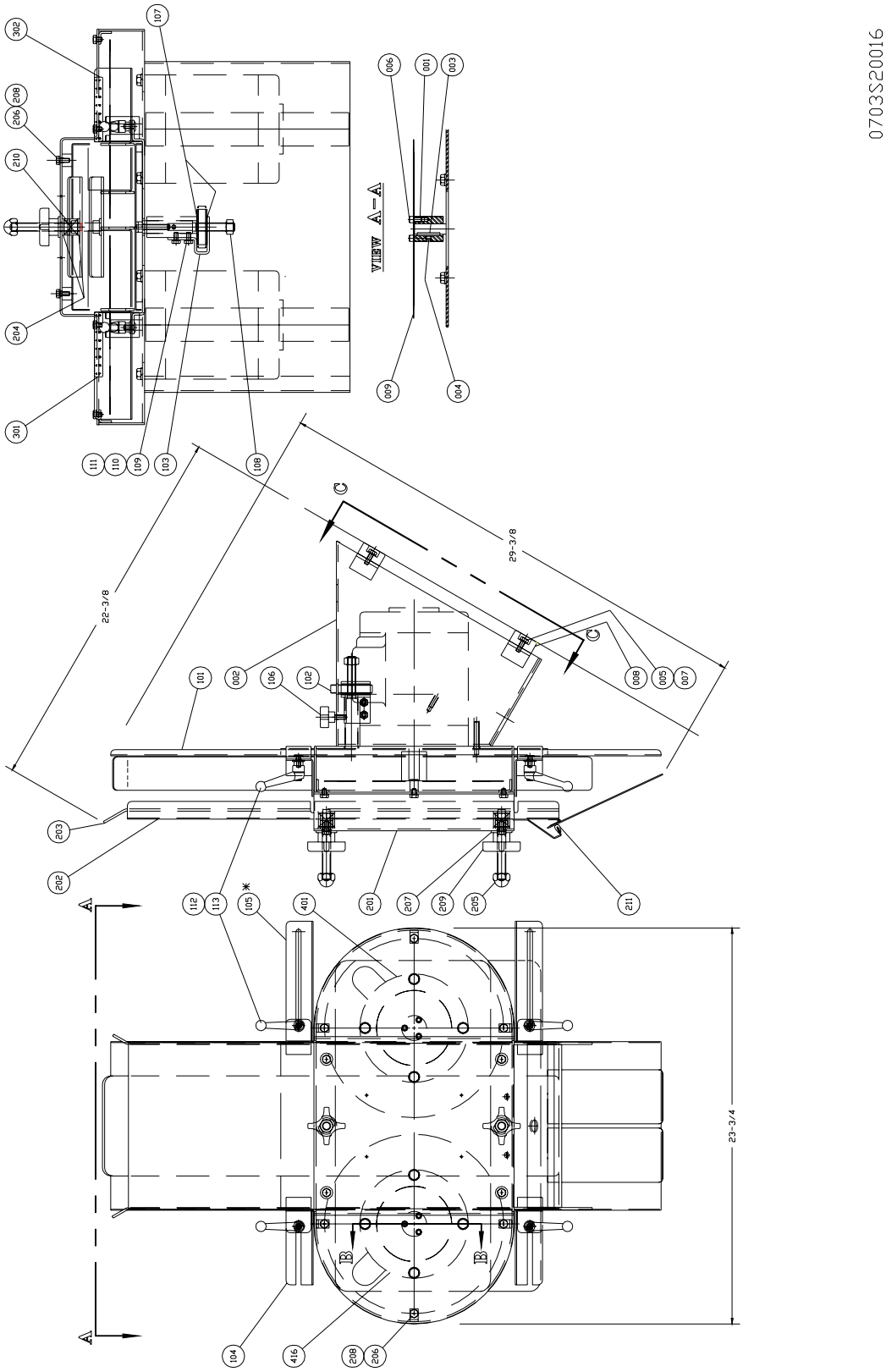
0703S20016
VIEW A-A
22-3/8
29-3/8
23-3/4
302
208
206
210
204
301
107
111
110
109
103
108
006
001
003
009
004
101
002
106
102
008
005
007
203
202
112
113
105
401
201
207
209
205
211
104
416
208
206

WIRING DIAGRAM – 115V
0703C12003

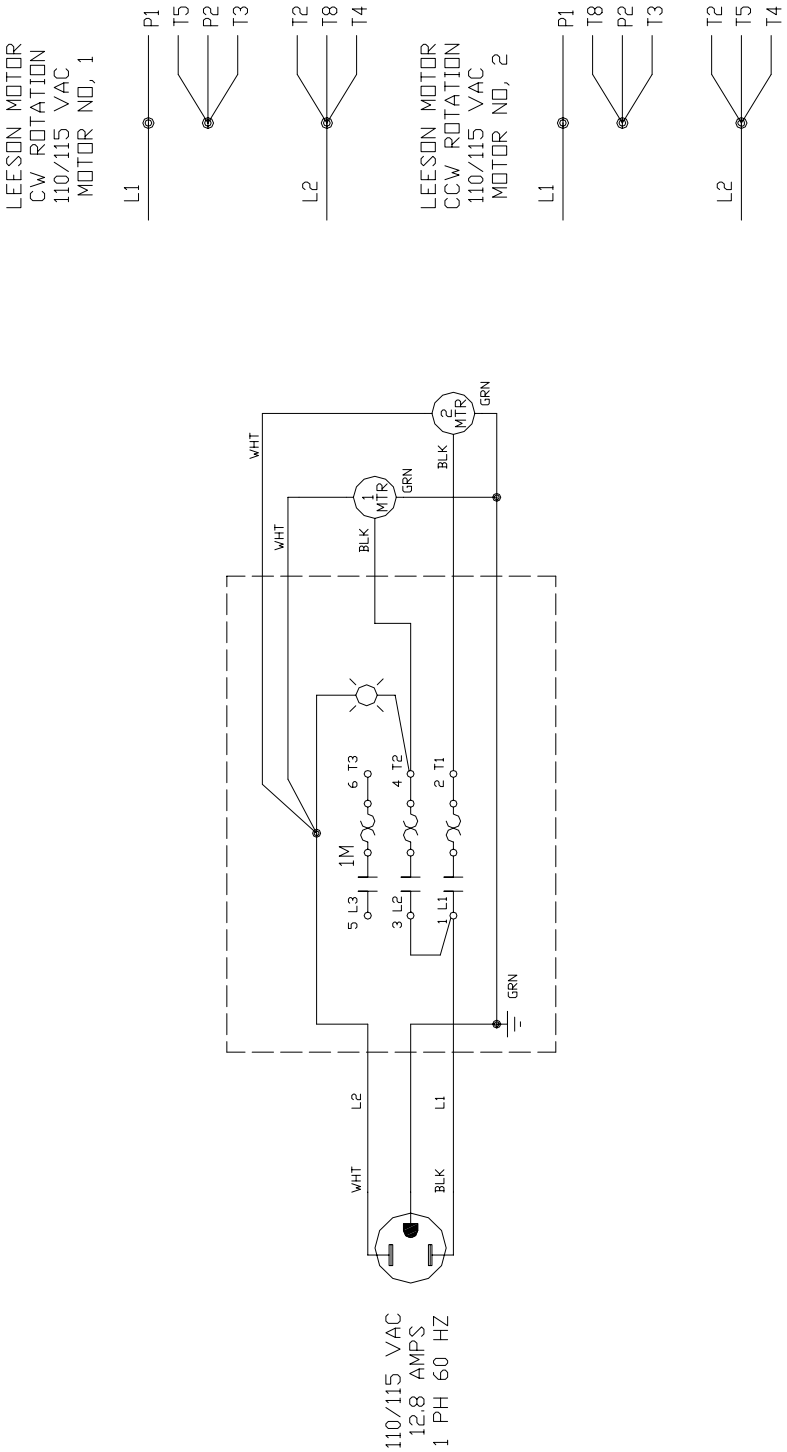

WIRING DIAGRAM – 230V
0703C12004

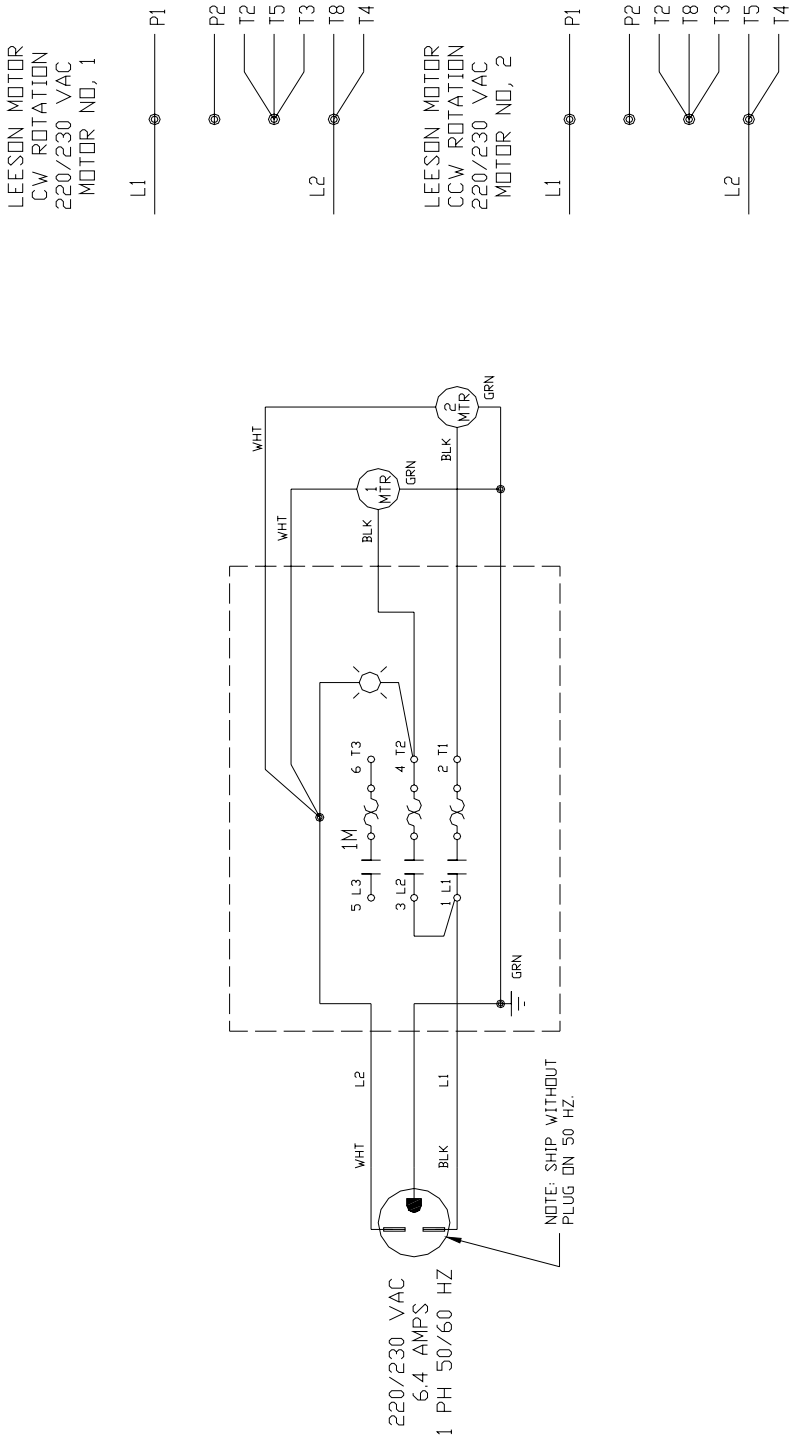

445 Sixth St. N.W. Grand Rapids, MI 49504
Ph: (800) 253-3893 www.oliverproducts.com

WARRANTY

PARTS
Oliver Products Company (Oliver) warrants that if any part of the equipment (other than a part not manufactured by Oliver) proves to be defective (as defined below) within one year after shipment, and if Buyer returns the defective part to Oliver within one year, Freight Prepaid to Oliver's plant in Grand Rapids, MI, then Oliver, shall, at Oliver's option, either repair or replace the defective part, at Oliver's expense.

LABOR
Oliver further warrants that equipment properly installed in accordance with our special instructions, which proves to be defective in material or workmanship under normal use within one (1) year from installation or one (1) year and three (3) months from actual shipment date, whichever date comes first, will be repaired by Oliver or an Oliver Authorized Service Dealer, in accordance with Oliver's published Service Schedule.

For purposes of this warranty, a defective part or defective equipment is a part or equipment which is found by Oliver to have been defective in materials workmanship, if the defect materially impairs the value of the equipment to Buyer. Oliver has no obligation as to parts or components not manufactured by Oliver, but Oliver assigns to Buyer any warranties made to Oliver by the manufacturer thereof.

This warranty **does not** apply to:
1. Damage caused by shipping or accident.
2. Damage resulting from improper installation or alteration.
3. Equipment misused, abused, altered, not maintained on a regular basis, operated carelessly, or used in abnormal conditions.
4. Equipment used in conjunction with products of other manufacturers unless such use is approved by Oliver Products in writing.
5. Periodic maintenance of equipment, including but not limited to lubrication, replacement of wear items, and other adjustments required due to installation, set up, or normal wear.
6. Losses or damage resulting from malfunction.

The foregoing warranty is in lieu of all other warranties expressed or implied AND OLIVER MAKES NO WARRANTY OF MERCHANTABILITY OR FITNESS FOR PURPOSE REGARDING THE EQUIPMENT COVERED BY THIS WARRANTY. Oliver neither assumes nor authorizes any person to assume for it any other obligations or liability in connection with said equipment. OLIVER SHALL NOT BE LIABLE FOR LOSS OF TIME, INCONVENIENCE, COMMERCIAL LOSS, INCIDENTAL OR CONSEQUENTIAL DAMAGES.

445 Sixth St. N.W. Grand Rapids, MI 49504
Ph: (800) 253-3893 www.oliverproducts.com

WARRANTY PROCEDURE

1. If a problem should occur, either the dealer or the end user must contact the Customer Service Department and explain the problem.

2. The Customer Service Manager will determine if the warranty will apply to this particular problem.

3. If the Customer Service Manager approves, a Work Authorization Number will be generated, and the appropriate service agency will perform the service.

4. The service dealer will then complete an invoice and send it to the Customer Service Department at Oliver Products Company.

5. The Customer Service Manager of Oliver Products Company will review the invoice and returned parts, if applicable, and approve for payment.

445 Sixth St. N.W. Grand Rapids, MI 49504
Ph: (800) 253-3893 www.oliverproducts.com

RETURNED PARTS POLICY

This policy applies to all parts returned to the factory whether for warranted credit, replacement, repair or re-stocking.

Oliver Products Company requires that the customer obtain a Return Material Authorization (RMA) number before returning any part. This number should appear on the shipping label and inside the shipping carton as well. All parts are to be returned prepaid**.** Following this procedure will insure prompt handling of all returned parts.

To obtain an RMA number contact the Repair Parts Deptartment toll free at (800) 253-3893.

Parts returned for re-stocking are subject to a **RE-STOCKING CHARGE**.

Thank you for your cooperation,

Repair Parts Manager
Oliver Products Company

Commercial Kitchen Equipment Parts

Find more Oliver equipment resources at

parthubz.com/equipment/oliver

Need parts or service?

Call 833-700-8006

support@parthubz.com

parthubz.com