Commercial Kitchen Equipment Parts

OLIVER 738-V

Service & Parts Manual

Provided by PartHubz

parthubz.com

833-700-8006 | support@parthubz.com

Walker, Michigan, U.S.A. 49534

USER'S OPERATING AND INSTRUCTION MANUAL

MODEL 738-V

MINI CHIP SLICER

0738S20000-CV

Oliver Packaging & Equipment Company
511 Sixth Street NW • Grand Rapids, MI 49504
(800) 253-3893
www.oliverquality.com

INDEX

Section Description	Document No.	Page No.
SAFETY INSTRUCTIONS	0738S20002	1-1
DESCRIPTION/SPECIFICATIONS	0738S20025	2-1
INSTALLATION INSTRUCTIONS	0738S20004	3-1
OPERATING INSTRUCTIONS	0738S20026	4-1
TROUBLESHOOTING	0758S20006	5-1
CLEANING AND MAINTENANCE	0758S20031	6-1
Removing the Blade Frames		6-4
Cleaning		6-5
Replacing the Blade Frames		6-5
Changing the Blades		6-6
Lubrication		6-9
General Cleaning		6-9
REPLACEMENT PARTS SECTION		
MAIN FRAME	0758S20034	7-1
Drawing		7-2
ELECTRICAL	0758S20020	8-1
Drawing		8-1
Parts List		8-2
DRIVE COMPONENTS	0758S20021	9-1
SLICE PARTS/COVERS	0758S20028	10-1
Drawing		10-1
Parts List		10-2
WIRING DIAGRAM 1-60-120	0738S20013	12-1
WARRANTY	GEN 040225	
WARRANTY PROCEDURE	GEN 040226	
RETURNED PARTS POLICY	GEN 040227	

THIS PAGE WAS INTENTIONALLY
LEFT BLANK.

Oliver Packaging & Equipment Company
511 Sixth Street NW • Grand Rapids, MI 49504
(800) 253-3893
www.oliverquality.com

SAFETY INSTRUCTIONS

WARNING

VARIOUS SAFETY DEVICES AND METHODS OF GUARDING HAVE BEEN PROVIDED ON THIS MACHINE. IT IS ESSENTIAL HOWEVER THAT THE MACHINE OPERATORS AND MAINTENANCE PERSONNEL OBSERVE THE FOLLOWING SAFETY PRECAUTIONS. IMPROPER INSTALLATION, MAINTENANCE, OR OPERATION OF THIS EQUIPMENT COULD CAUSE SERIOUS INJURY OR DEATH.

1. Read this manual before attempting to operate your machine. Never allow an untrained person to operate or service this machine.

2. Connect the machine to a properly grounded electrical supply that matches the requirements shown on the electrical specification plate and follow all specifications of local electrical codes.

3. Disconnect and lock-out the machine from the power supply before cleaning or servicing.

4. Check and secure all guards before starting the machine.

5. Observe all caution and warning labels affixed to the machine.

6. Use only proper replacement parts.

7. Do not wear loose fitting clothing or loose hair when working near this machine. Shirt tails should be tucked in.

8. Wear proper, personal, protective, safety equipment.

9. Keep Hands away from the moving parts of this machine while it is in operation.

10. In addition to these general safety instructions, please follow the more specific safety instructions as specified in the operating instruction manual.

11. The on/off switch is marked with international symbols for on and off. See below.

ON **OFF**

Oliver Packaging & Equipment Company
511 Sixth Street NW • Grand Rapids, MI 49504
(800) 253-3893
www.oliverquality.com

DESCRIPTION/SPECIFICATIONS

Description

The Model 738-V Mini Chip Slicer is a compact, countertop slicer designed to reprocess shrink - specifically bagels and baguettes - into a marketable bakery/foodservice product. Designed with reciprocating blade technology, the Mini Chip Slicer easily slices through day-old bagels and baguettes.

The Model 738-V Mini Chip Slicer is constructed of stainless and painted steel. Easy to clean, the Mini Chip Slicer food contact surfaces - infeed cover, pusher, handle, and blade cartridge - can be removed without the use of tools for cleaning and sanitizing in a dishwasher. Blade changes are simple: simply remove the blade cartridge, replacing it with an OEM cartridge. No tools or service company required.

Specifications

Space Requirements:
Model 738-V *(All Dimensions are Approximate)*

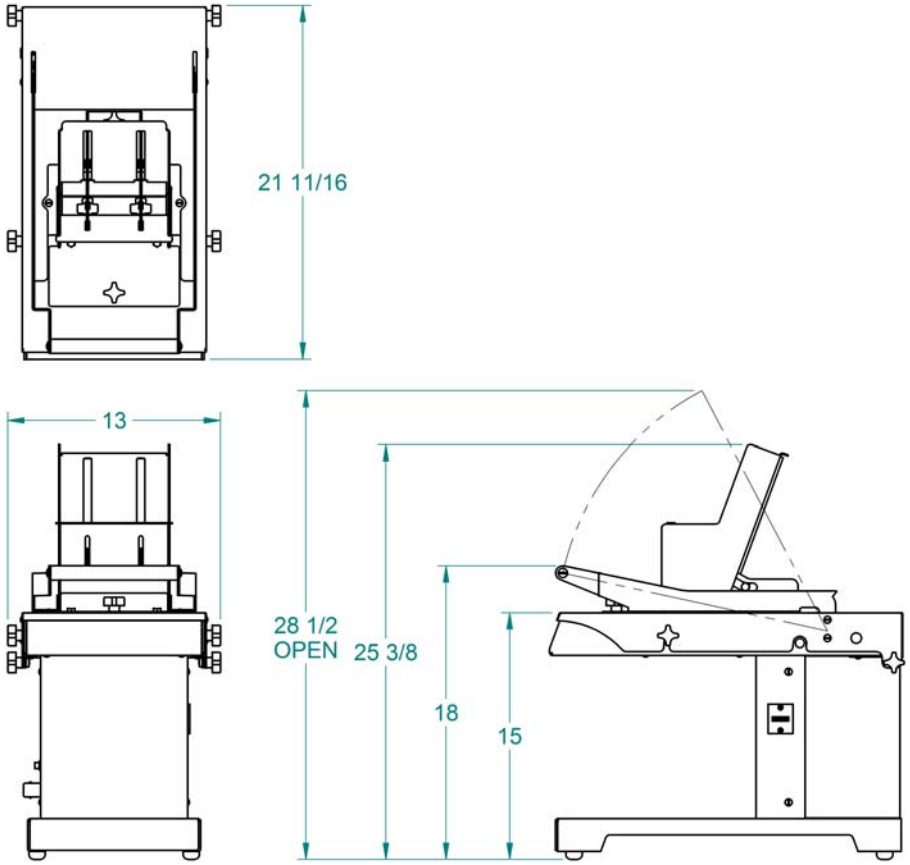

Product Capacities:

Length	6 inches
Width	6 inches
Height	2 inches

Standard Electrical Options: (Others consult factory)
1 phase, 60 Hz, 120VAC, 2 Amps.

Shipping Weight:
100 lbs. (approximate)

Net Weight:
80 lbs. (approximate)

INSTALLATION INSTRUCTIONS

Before starting the Installation process make sure you observe the following caution notes.

CAUTION

THE SLICER IS HEAVY, USE PROPER TECHNIQUE WHEN LIFTING OR MOVING.

Select a location for your slicer which has a substantial mounting surface and which has electrical service compatible with the load the machine will place on it as indicated on the electrical data plate of the machine. Position the machine while it is still in its packaging as close as possible to the desired end location.

Oliver Packaging & Equipment Company
511 Sixth Street NW • Grand Rapids, MI 49504
(800) 253-3893
www.oliverquality.com

OPERATING INSTRUCTIONS

WARNING

ALWAYS USE CARE WHENEVER WORKING NEAR THE CUTTING KNIVES.

To operate the slicer, follow these simple steps:

1. Power unit on and lift the handle. The unit will automatically shut off.
2. Place the product atop the blades and so that the product is resting against the back of the chute.
3. Using the handle, apply slight pressure in a downward motion until the handle comes to a stop. Repeat steps 1-3.
4. When finished, power the unit off.

NOTE

THE UNIT WILL CONTIUE TO RUN UNLESS THE HANDLE IS LIFTED TO THE STARTING POSITION. PLEASE REMEMBER TO POWER OFF THE UNIT WHEN SLICING IS COMPLETE.

STEP 1 **STEP 2** **STEP 3**

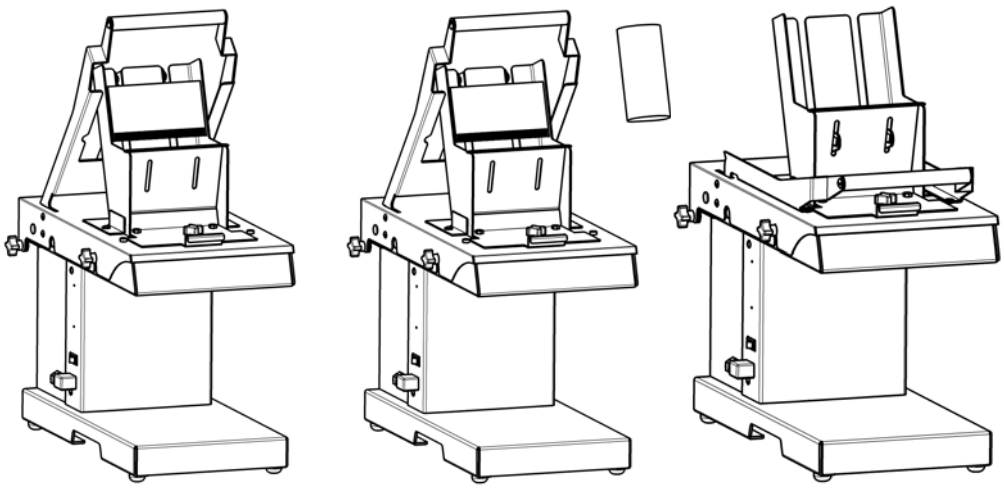

THIS PAGE WAS INTENTIONALLY
LEFT BLANK.

TROUBLE SHOOTING

WARNING

ALWAYS DISCONNECT THE SLICER FROM THE POWER SUPPLY BEFORE ATTEMPTING ANY TYPE OF MAINTENANCE TASK, INCLUDING TROUBLESHOOTING.

Slicer will not start

- The machine is not plugged in.
- There is no power at the outlet.
- The cover is not on correctly. The cover has an interlocking mechanism that allows the unit to operate only if the cover is on.
- Broken wire or disconnected terminals.
- The switch actuator cam is not contacting the switch. Lift the cover and adjust the screw with a flat head screw driver.

Pusher interference when slicing product

- Loosen pusher and adjust side to side to make sure there is no interference.
- Blade frame is not correctly placed on slide blocks.
- Pusher blades are bent or damaged. Contact dealer or factory.

Extreme effort needed to slice product

- Blades are dull. Contact dealer or factory for replacements.
- Product is too stale or old. The slicer is designed to be most efficient with slicing fresh or day old product.

CLEANING AND MAINTENANCE

WARNING

ALWAYS UNPLUG THE SLICER BEFORE PERFORMING ANY TYPE OF MAINTENANCE TASK.

To prepare your unit for cleaning please refer to the pictorial below for step by step instructions.

1. Remove the thumb screw atop of the front guard and remove the guard. Once the guard is removed use a mild cleaning solution on all surfaces to remove any residue or crumb build up (FIG A). Also, with the brush provided, remove any crumbs and/or residue that have accumulated within the slots of the front blade guide (FIG B). The guard can now be set aside.

Figure A

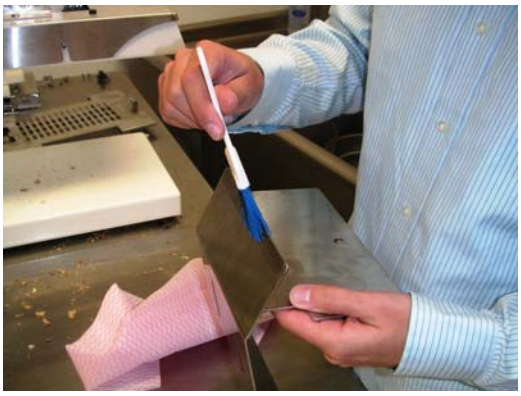

Figure B

WARNING

NOW THAT THE FRONT GUARD HAS BEEN REMOVED, THE SLICING BLADES WILL BE EXPOSED. USE CAUTION WHEN MOVING ON TO THE NEXT STEP.

2. With the handle in the up position, insert the quick pin through the slot in the chute into the hole on the slide block. This will keep the slide block attached and allow for easy reassembly. Remove the pusher bracket by removing the (2) two thumbscrews on the front of the block. Use damp rag to wipe away any debris from the pusher bracket.

3. Loosen the (2) two thumb screws on the sides of the unit near the front and lift the cover. Use the cover props to secure the cover in the upright position.

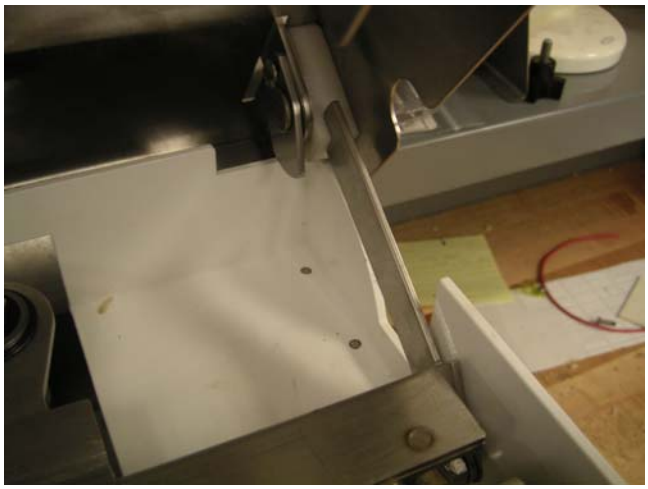

4. Place the safety cover on the blade cartridge by first hooking it around the pin plate on the rear of the cartridge (FIG A). Now proceed to lay the cover down and fasten it with the screw provided on the cover (FIG B). Remove the (4) post hold down blocks and set aside (FIG C).

Figure A

Figure B

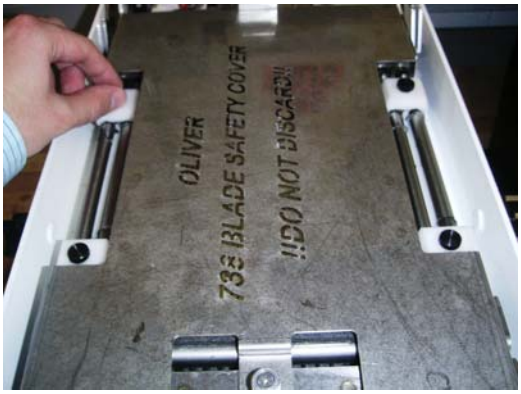

Figure C

NOTE: The protective blade cover will only fit on the cartridge when it is in the closed position. This helps with the cleaning and re-assembly processes. Use the knob on the drive assembly to make the adjustment to the closed position.

NOTE: Now that the safety cover has been placed this is a good time to brush crumbs from the blades. Using the brush provided, gently brush between the blades from the underside of the slicing area.

WARNING

ONLY CLEAN THE SLICING BLADES FROM THE BOTTOM. CLEANING THEM FROM THE TOP WILL DAMAGE THE BRUSH AND POTENTIALLY CAUSE INJURY.

REMOVING THE BLADE CARTRIDGE

5. Now that the blade cover is placed and the post hold down blocks are removed you can now remove the blade cartridge from the unit by lifting up on the tab at the rear end of the blade cover.

WARNING

NEVER REMOVE BLADE FRAME ASSEMBLY WITHOUT PROTECTIVE GUARD. BLADES ARE EXTREMELY SHARP AND IF HANDLED INCORRECTLY MAY RESULT IN SERIOUS INJURY.

CLEANING

Now that the blade frames have been safely removed you can now proceed with removing any crumb deposits within the machine. A brush, compressed air, or a vacuum are helpful tools for this task.

REPLACING THE BLADE CARTRIDGE

6. Make sure that the drive assembly is in the correct position as shown below.

NOTE: The blade cartridge will only fit back into the machine with the drive assembly in the correct configuration below. The Bearing holes need to be at the position nearest each other.

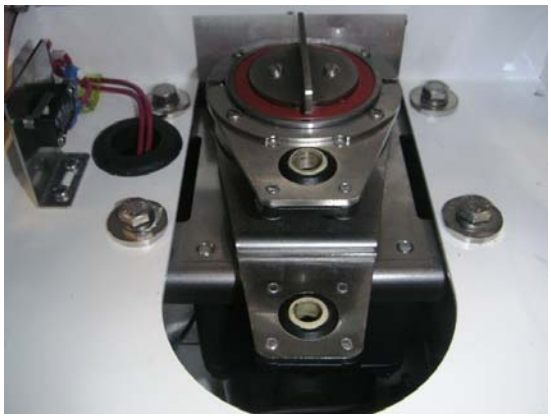

CORRECT

INCORRECT

7. With the protective blade guard in place locate the center of the bearings in the drive assembly with the pin plates attached to the blade cartridge.

8. Once the drive assembly has been located, place the blade cartridge posts in the tracks on the base assembly. Apply slight pressure to the front and rear of the blade cartridge to ensure the proper fit in to the drive assembly and slide blocks.

9. You can now replace the post hold down blocks that you set aside in step 5.

NOTE: The cover assembly will not fit on the unit if the protective blade cover is left in place.

CHANGING THE BLADES

Oliver Packaging and Equipment suggests that blades not be changed in the field due to the potential for injury. We offer a blade frame cartridge exchange program for when blades become dull. Please contact your dealer or the Oliver service department.

10. Use the brush provided to remove any crumbs and/or residue from the rear blade guide.

11. You can now wipe down the entire interior surface of the infeed chute using a mild cleaning solution.

NOTE: Be aware that product may build up at the bottom of the slots on the infeed chute. If so, use a wet rag to remove it.

12. Remove the safety cover from the blade cartridge by loosening the screw and unhooking it from the pin plate at the rear of the cartridge.

NOTE: Make sure that when the safety cover is not in use that it has a designated area to be stored. This will help with misplacement and potentially loosing the cover.

13. With one hand on the front of the cover, disengage the cover props and slowly lower the cover into the closed position. Secure the cover by tightening the (2) two thumb screws near the front of the unit.

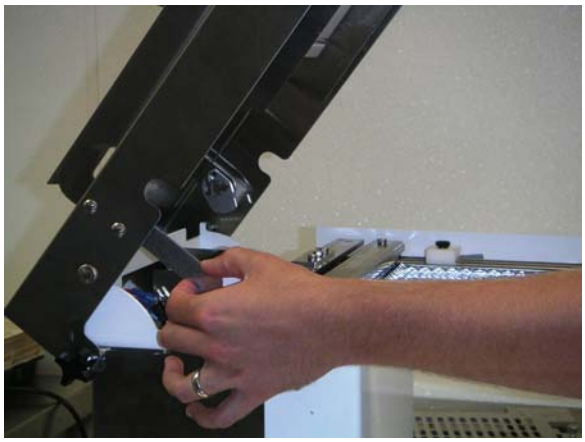

NOTE: The cover will not fully close if the protective blade cover is left in place.

CAUTION

IT IS ESSENTIAL THAT THE COVER BE SLOWLY LOWERED INTO POSITION SO THAT THE BLADE GUIDE RETURNS TO ITS ORIGINAL POSITION. IF NOT, SERIOUS DAMAGE COULD BE DONE TO THE SLICING BLADES.

14. Once the cover has been securely fastened, you can now replace the pusher bracket by placing it on the two studs that are attached to the slide block.

15. Now that the pusher has been attached to the slide block, grab the handle with your left hand and remove the quick pin by pulling on the ring (Fig A). The pin can then be placed in the hole on the flange atop the chute (Fig B).

Figure A

Figure B

16. Lastly, carefully replace the front guard by making sure the slots on the front blade guide line up with the slicing blades. Fasten the guard to the cover by tightening down the thumb screw.

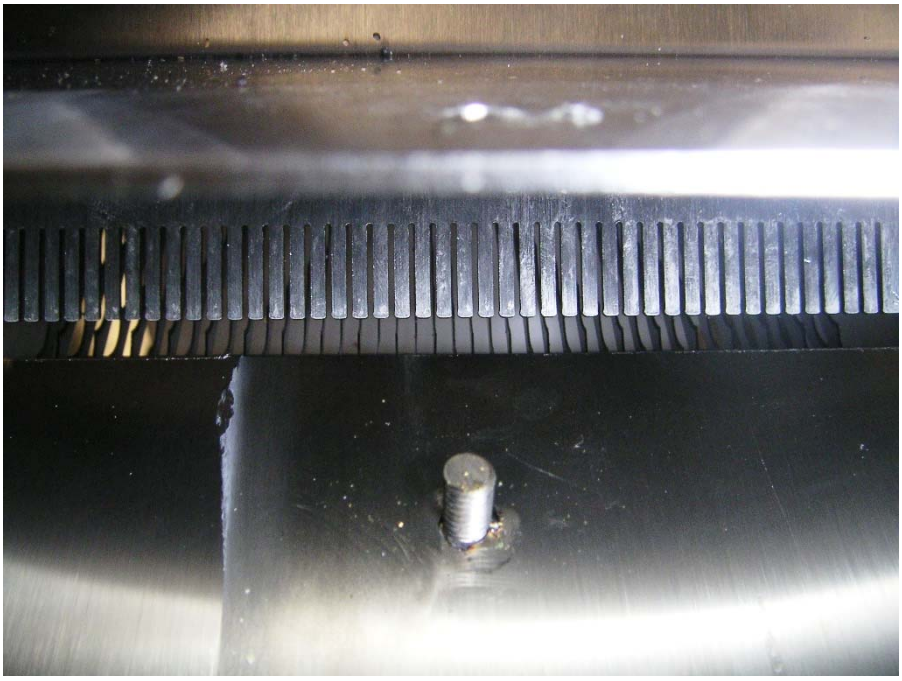

LUBRICATION

WARNING

ALWAYS DISCONNECT THE SLICER FROM THE POWER SUPPLY BEFORE ATTEMPTING ANY TYPE OF MAINTENANCE TASK.

Oliver suggests a vegetable based aerosol product be used to gently coat the blades on occasion. Once a month put a drop of a food approved lubricant on the plastic slide blocks on the inside of the unit. This will increase the longevity of the internal parts of your slicer.

NOTE

NEVER OIL OR GREASE THE MOTOR.

GENERAL CLEANING

Use a mild detergent solution to clean the exterior surfaces. Periodically remove all covers and brush or blow, (if compressed air is available), all foreign material from all surfaces, especially moving parts.

THIS PAGE WAS INTENTIONALLY
LEFT BLANK.

MAIN FRAME

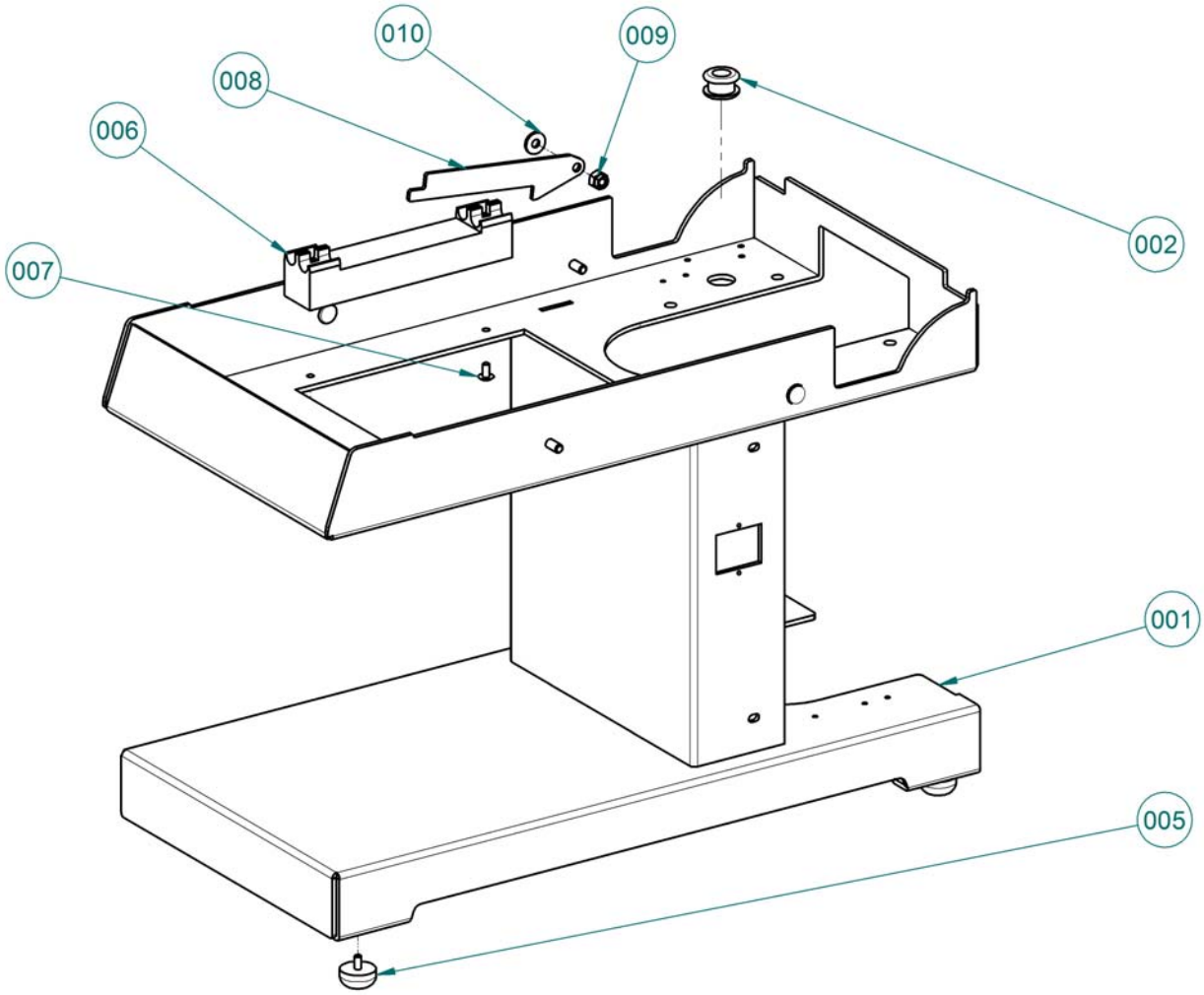

Oliver Packaging & Equipment Company
511 Sixth Street NW • Grand Rapids, MI 49504
(800) 253-3893
www.oliverquality.com

MAIN FRAME PARTS LIST

ITEM NO	PART DESCRIPTION	PART NUMBER
001	Base	0738-0002-1
002	Grommet-Rubber	5767-1207
003*	Nut-10-24 Stainless Acorn	5832-0585
004*	Washer-#10 Spring Lock Stainless	5851-9355
005	Bumper-Rubber w/ Screw	5902-0035
006	Block-Guide	0738-0003-1
007	Screw-10-24 x 3/8 Stainless Truss	5843-5384
008	Plate-Prop	0738-0005-1
009	Nut-1/4-20 Stainless Locking	5831-9087
010	Washer-1/4 Flat Stainless	5851-9304

*Items not shown

FOR SERVICE PARTS CALL OLIVER PACKAGING & EQUIPMENT @ 800-253-3893

ELECTRICAL PARTS

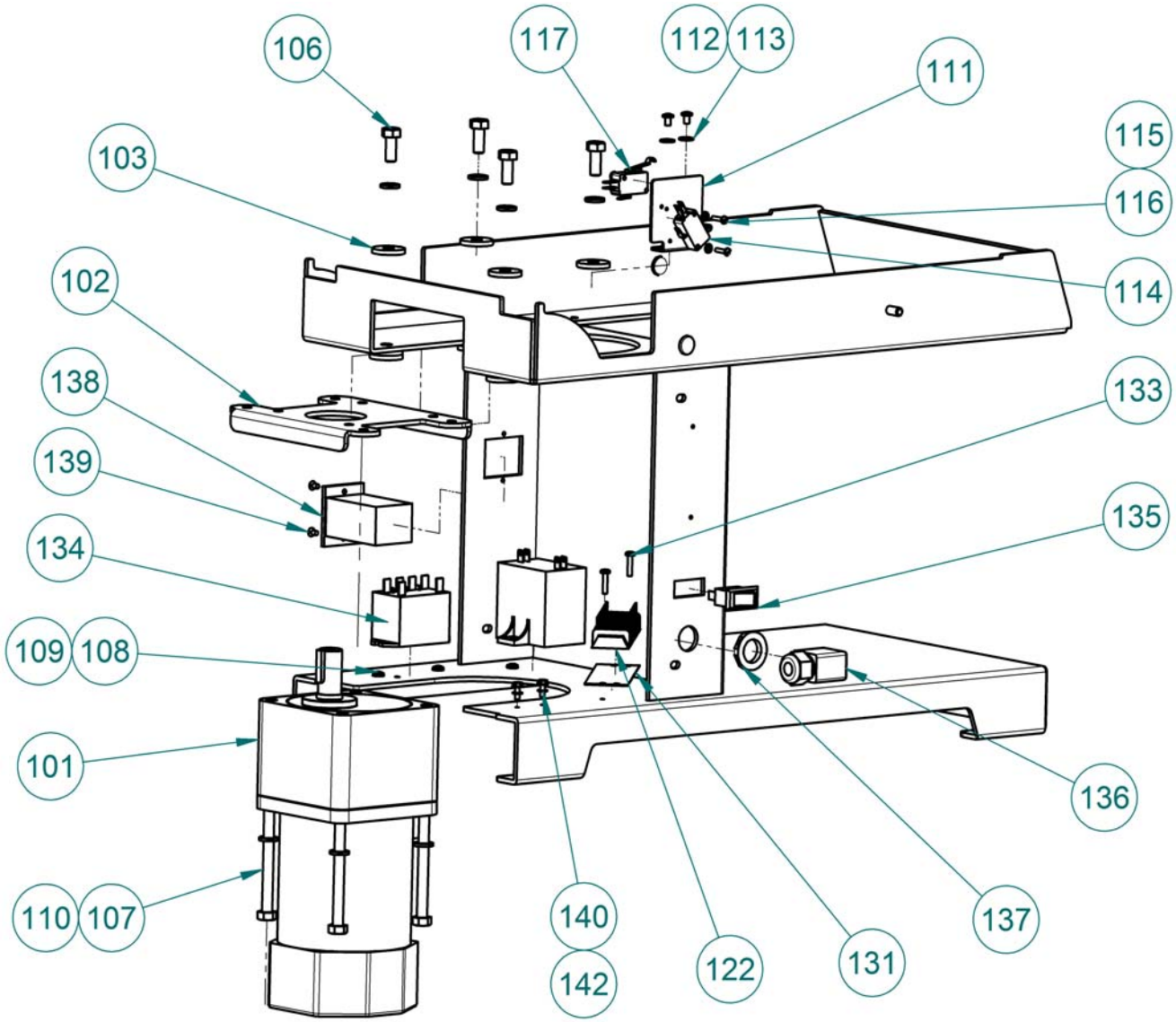

Oliver Packaging & Equipment Company
511 Sixth Street NW • Grand Rapids, MI 49504
(800) 253-3893
www.oliverquality.com

ELECTRICAL PARTS LIST

ITEM NO	PART DESCRIPTION	PART NUMBER
101	Assembly-Motor Cord	0738-25505K
102	Plate-Motor Mount	0738-0045
103	Spacer	0738-0046
106	Screw-5/16-18 x ¾ Stainless Hex	5843-1028
107	Screw-5/16-18 x 3 1/2 Stainless Hex	5843-1039
108	Screw-8-32 x 5/16 Stainless Pan	5843-5552
109	Washer-#8 Shake Proof Stainless	5851-9130
110	Washer-5/16 Lock Stainless	5851-9358
111	Mount-Switch	0738-0008
112	Screw-8-32 x ¼ Stainless Pan	5843-5551
113	Washer-#8 Flat Stainless	5851-8108
114	Switch-SM Basic w/ Roller	5757-8002
115	Screw-4-40 x 1/2 Stainless Pan	5843-5524
116	Washer-#4 Shake Proof Stainless	5851-9127
117	Switch-SM Basic	5757-8001
122	Block-Terminal 8 Row	5770-7451
131	Strip-Marker 8 Row	5770-7328
133	Screw-M3.5 x 16mm Stainless Pan	8843-2265
134	Relay	5749-8027
135	Switch-Rocker	5757-3314
136	Bushing-Strain Relief 90°	5765-1010
137	Nut-PG-11 Plastic Lock	5766-7786
138	Counter-5 Digit Mini	5712-9080
139	Screw-6-32 x 1/4 Stainless Truss	5843-5360
140	Screw-6-32 x 3/8 Green Grounding	5841-9501
142	Washer-#6 Shake Proof Stainless	5851-9129

FOR SERVICE PARTS CALL OLIVER PACKAGING & EQUIPMENT @ 800-253-3893

THIS PAGE WAS INTENTIONALLY
LEFT BLANK.

Oliver Packaging & Equipment Company
511 Sixth Street NW • Grand Rapids, MI 49504
(800) 253-3893
www.oliverquality.com

DRIVE COMPONENTS

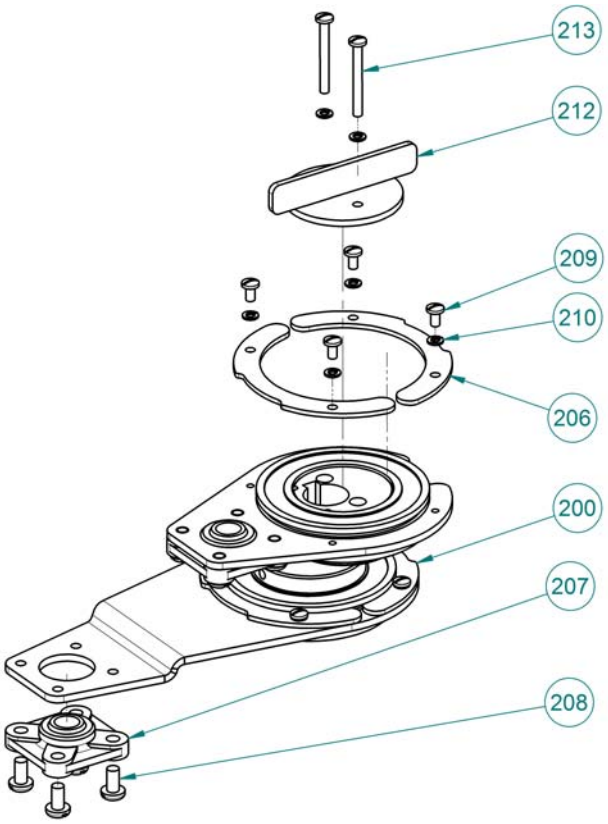

DRIVE COMPONENTS PARTS LIST

ITEM NO	PART DESCRIPTION	PART NUMBER
200*	Assembly-Drive	0738-25002K
206	Clip-Bearing	0738-0049
207	Bearing-10mm Spherical Flange Mount	5251-3591
208	Screw-10-24 x 3/8 Stainless Pan	5843-5384
209	Screw-6-32 x 1/4 Stainless Pan	5843-5541
210	Washer-#6 Lock Stainless	5851-9353
212	Knob	0738-0051
213	Screw-6-32 x 1 ¼ Stainless Pan	5843-5547

Replacements for 200 are ordered assembled with fasteners. Parts may not be substituted within the assembly other than those called out.

FOR SERVICE PARTS CALL OLIVER PACKAGING & EQUIPMENT @ 800-253-3893

SLICE PARTS/COVERS

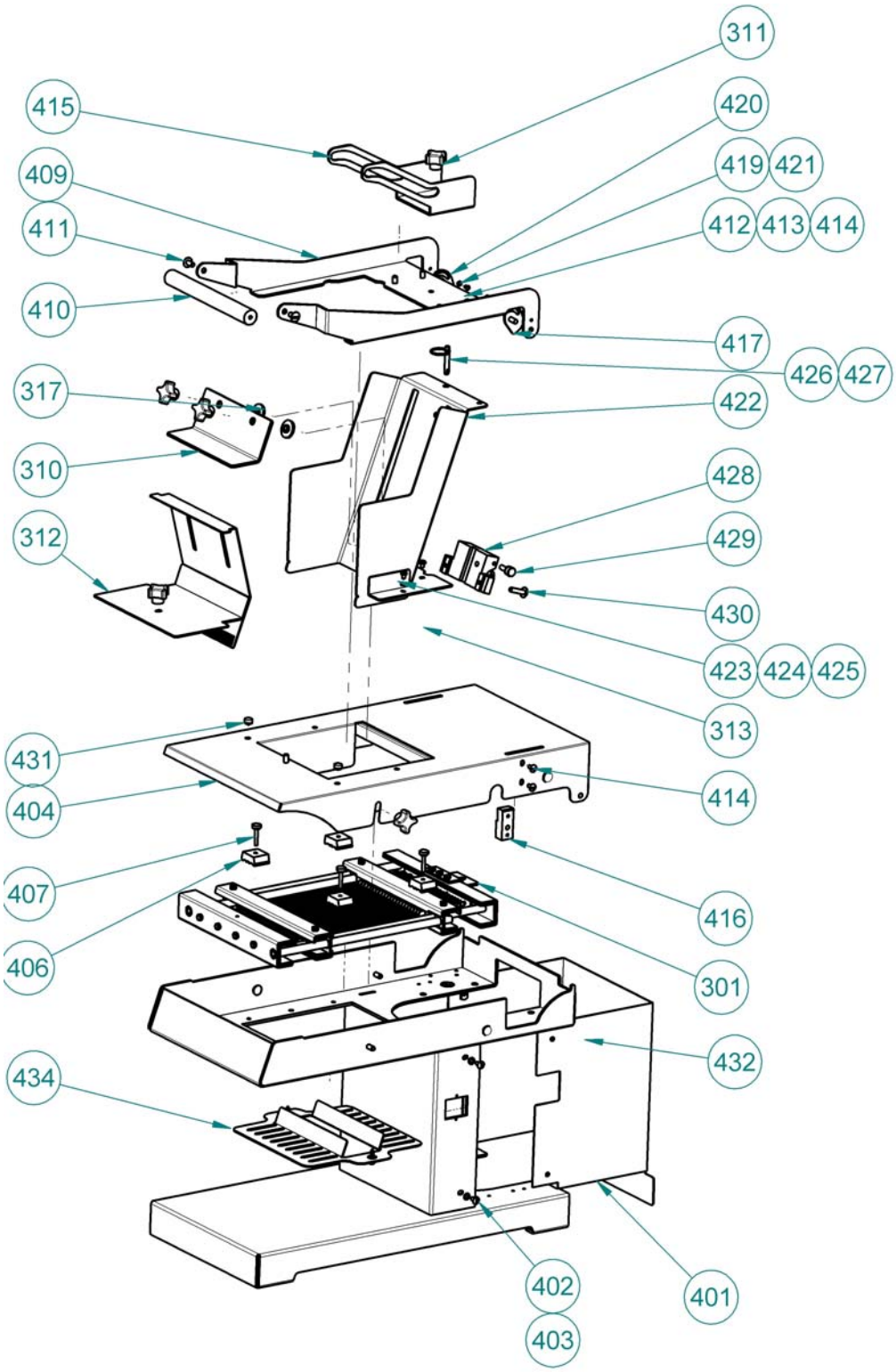

Oliver Packaging & Equipment Company
511 Sixth Street NW • Grand Rapids, MI 49504
(800) 253-3893
www.oliverquality.com

SLICE PARTS/COVERS PARTS LIST

ITEM NO	PART DESCRIPTION	PART NUMBER
301*	Cartridge-Blade Frame	0738-25XXXK
310	Bracket-Pusher	0738-0069
311	Knob-1/4-20 4 Prong Plastic	5911-7034
312	Plate-Chute Crowding	0738-0060-08
313	Guide-Rear Blade	0738-0059-08
315	Assembly-Blade Safety Cover	0738-0024K
317	Bushing-Slide	0738-0068
401	Cover-Motor	0738-0033-1
402	Screw-10-24 x 3/8 Stainless Truss	5843-5384
403	Washer-#10 Shake Proof Stainless	5851-9394
404	Cover	0738-0056
406	Block-Top Guide	0738-0052
407	Screw-8-32 x 1 Stainless Thumb	0738-25504K
409	Assembly-Handle w/ Guard	0738-0038-1
410	Handle	0738-0039
411	Screw-1/4-20 x 1/2 Stainless Truss	5843-5412
412	Plate-Centering	0738-0061
413	Nut-1/4-20 Stainless Acorn	5832-0590
414	Washer-1/4 Spring Lock Stainless	5851-9357
415	Bracket-Cam	0738-0062
416	Block-Handle Hinge	0738-0040
417	Plate-RH Cover Cam	0738-0042-0001
419	Washer-#8 Spring Lock Stainless	5851-9354
420	Plate-LH Cover Cam	0738-0042-0002
421	Screw-8-32 x 1/4 Stainless Round	5843-5232
422	Chute	0738-0058
423	Screw-10-24 x 1/4 Stainless Hex	5843-1230
425	Washer-#10 Spring Lock Stainless	5851-9355
426	Pin-Quick 1/4 x 1 Stainless w/ Lanyard	5835-7802
427	Screw-10-24 x 1/4 Stainless Truss	5843-5383
428	Block-Guide	0738-0063
429	Bearing-Cam Follower	5251-0010
430	Screw-1/4-20 x 2 Stainless Truss	5843-5419
431	Bumper-Press In	5902-0023
432	Bracket-RH Cover Attachment	0738-0055-0001
433**	Bracket-LH Cover Attachment	0738-0055-0002
434	Plate-Discharge	0738-0072K

*Item 301 is replaced fully assembled. Specify slice thickness when ordering.
**LH not shown.

REV. 6/4/13

FOR SERVICE PARTS CALL OLIVER PACKAGING & EQUIPMENT @ 800-253-3893

Oliver Packaging & Equipment Company
511 Sixth Street NW • Grand Rapids, MI 49504
(800) 253-3893
www.oliverquality.com

WIRING DIAGRAM 1-60-120

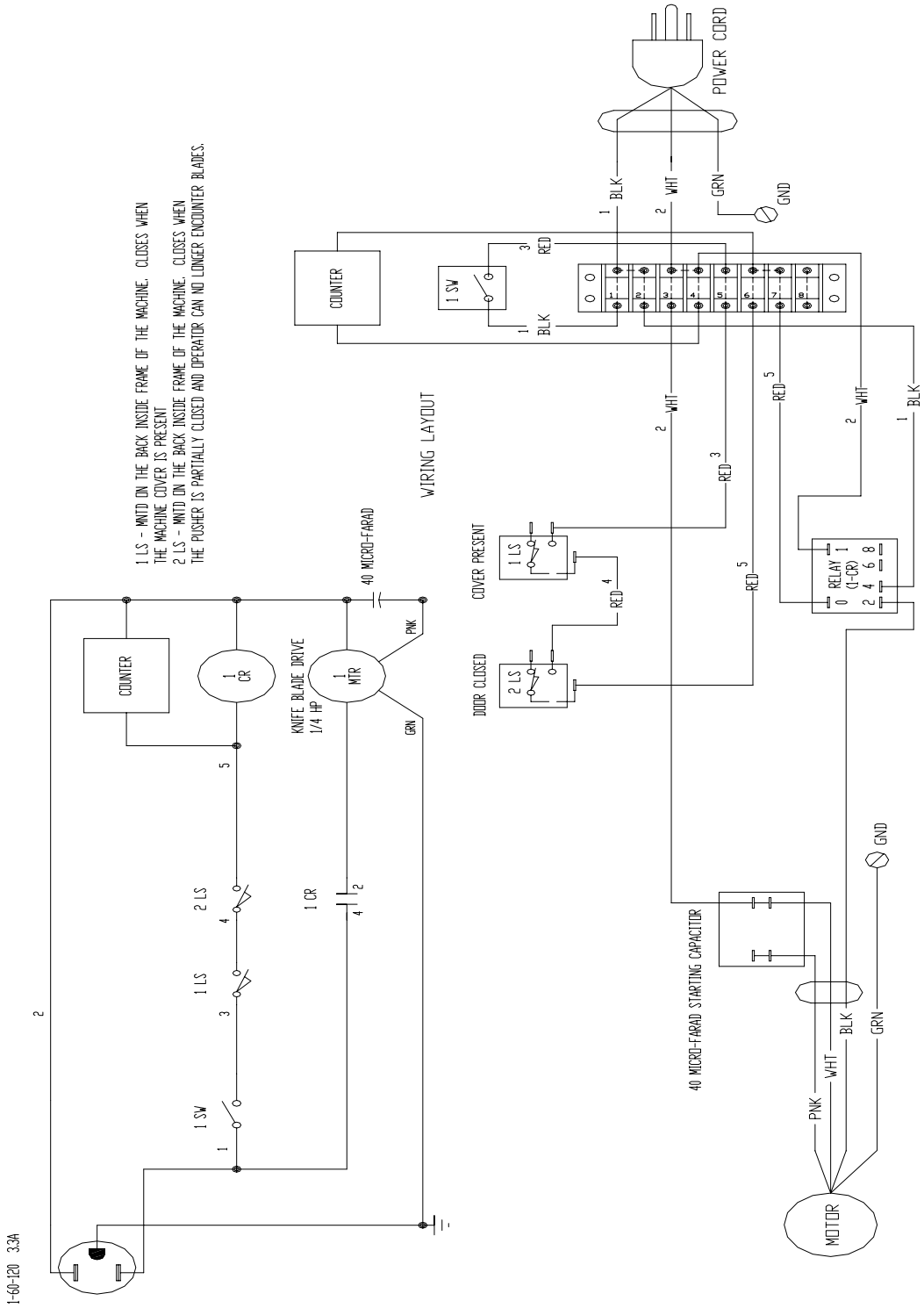

Oliver Packaging & Equipment Company
511 Sixth Street NW • Grand Rapids, MI 49504
(800) 253-3893
www.oliverquality.com

WARRANTY

PARTS
Oliver Packaging & Equipment Company warrants that if any part of the equipment (other than a part not manufactured by Oliver Packaging & Equipment) proves to be defective (as defined below) within one year after shipment, and if Buyer returns the defective part to Oliver Packaging & Equipment within one year, Freight Prepaid to Oliver Packaging & Equipment plant in Grand Rapids, MI, then Oliver Packaging & Equipment , shall, at Oliver Packaging & Equipment option, either repair or replace the defective part, at Oliver Packaging & Equipment expense.

LABOR
Oliver further warrants that equipment properly installed in accordance with our special instructions, which proves to be defective in material or workmanship under normal use within one (1) year from installation or one (1) year and three (3) months from actual shipment date, whichever date comes first, will be repaired by Oliver Packaging & Equipment or an Oliver Packaging & Equipment Authorized Service Dealer, in accordance with Oliver Packaging & Equipment published Service Schedule.

For purposes of this warranty, a defective part or defective equipment is a part or equipment which is found by Oliver Packaging & Equipment to have been defective in materials workmanship, if the defect materially impairs the value of the equipment to Buyer. Oliver Packaging & Equipment has no obligation as to parts or components not manufactured by Oliver Packaging & Equipment, but Oliver Packaging & Equipment assigns to Buyer any warranties made to Oliver Packaging & Equipment by the manufacturer thereof.

This warranty **does not** apply to:
1. Damage caused by shipping or accident.
2. Damage resulting from improper installation or alteration.
3. Equipment misused, abused, altered, not maintained on a regular basis, operated carelessly, or used in abnormal conditions.
4. Equipment used in conjunction with products of other manufacturers unless such use is approved by Oliver Packaging & Equipment Company in writing.
5. Periodic maintenance of equipment, including but not limited to lubrication, replacement of wear items, and other adjustments required due to installation, set up, or normal wear.
6. Losses or damage resulting from malfunction.

The foregoing warranty is in lieu of all other warranties expressed or implied AND OLIVER PACKAGING & EQUIPMENT COMPANY MAKES NO WARRANTY OF MERCHANTABILITY OR FITNESS FOR PURPOSE REGARDING THE EQUIPMENT COVERED BY THIS WARRANTY. Oliver Packaging & Equipment Company neither assumes nor authorizes any person to assume for it any other obligations or liability in connection with said equipment. OLIVER PACKAGING & EQUIPMENT COMPANY SHALL NOT BE LIABLE FOR LOSS OF TIME, INCONVENIENCE, COMMERCIAL LOSS, INCIDENTAL OR CONSEQUENTIAL DAMAGES.

Oliver Packaging & Equipment Company
511 Sixth Street NW • Grand Rapids, MI 49504
(800) 253-3893
www.oliverquality.com

WARRANTY PROCEDURE

1. If a problem should occur, either the dealer or the end user must contact the Parts and Service Department and explain the problem.

2. The Parts and Service Manager will determine if the warranty will apply to this particular problem.

3. If the Parts and Service Manager approves, a Work Authorization Number will be generated, and the appropriate service agency will perform the service.

4. The service dealer will then complete an invoice and send it to the Parts and Service Department at Oliver Packaging & Equipment Company.

5. The Parts and Service Manager of Oliver Packaging and Equipment Company will review the invoice and returned parts, if applicable, and approve for payment.

Oliver Packaging & Equipment Company
511 Sixth Street NW • Grand Rapids, MI 49504
(800) 253-3893
www.oliverquality.com

RETURNED PARTS POLICY

This policy applies to all parts returned to the factory whether for warranted credit, replacement, repair or re-stocking.

Oliver Packaging and Equipment Company requires that the customer obtain a Return Material Authorization (RMA) number before returning any part. This number should appear on the shipping label and inside the shipping carton as well. All parts are to be returned prepaid**.** Following this procedure will insure prompt handling of all returned parts.

To obtain an RMA number contact the Repair Parts Deptartment toll free at (800) 253-3893.

Parts returned for re-stocking are subject to a **RE-STOCKING CHARGE**.

Thank you for your cooperation,

Repair Parts Manager
Oliver Packaging and Equipment Company

Commercial Kitchen Equipment Parts

Find more Oliver equipment resources at

parthubz.com/equipment/oliver

Need parts or service?

Call 833-700-8006

support@parthubz.com

parthubz.com