Commercial Kitchen Equipment Parts

# OLIVER 738

## Service & Parts Manual

**Provided by PartHubz**

parthubz.com

833-700-8006 | support@parthubz.com

Walker, Michigan, U.S.A. 49534-7564

# USER'S OPERATING AND INSTRUCTION MANUAL

# MODEL 738

MINI CHIP SLICER

0738S20000-CV

Oliver Packaging & Equipment Company
3236 Wison DR NW Walker MI. 49534
(800) 253-3893
www.oliverquality.com

# INDEX


| Section Description | Document No. | Page No. |
|---|---|---|
| SAFETY INSTRUCTIONS | 0738S20002 | 1-1 |
| DESCRIPTION/SPECIFICATIONS | 0738S20016 | 2-1 |
| INSTALLATION INSTRUCTIONS | 0738S20004 | 3-1 |
| OPERATING INSTRUCTIONS | 0738S20017 | 4-1 |
| TROUBLESHOOTING | 0758S20006 | 5-1 |
| CLEANING AND MAINTENANCE | 0758S20018 | 6-1 |
| Removing the Blade Cartridge | | 6-1 |
| Cleaning | | 6-4 |
| Replacing the Blade Frames | | 6-5 |
| Changing the Blades | | 6-7 |
| Lubrication | | 6-8 |
| General Cleaning | | 6-8 |
| REPLACEMENT PARTS SECTION | | |
| MAIN FRAME | 0758S20019 | 7-1 |
| Drawing | | 7-2 |
| ELECTRICAL | 0758S20020 | 8-1 |
| Drawing | | 8-1 |
| Parts List | | 8-2 |
| DRIVE COMPONENTS | 0758S20021 | 9-1 |
| SLICE PARTS/COVERS | 0758S20022 | 10-1 |
| Drawing | | 10-1 |
| Parts List | | 10-2 |
| WIRING DIAGRAM 1-60-120 | 0738S20013 | 12-1 |
| WARRANTY | GEN 040225 | |
| WARRANTY PROCEDURE | GEN 040226 | |
| RETURNED PARTS POLICY | GEN 040227 | |

THIS PAGE WAS INTENTIONALLY
LEFT BLANK.

Oliver Packaging & Equipment Company
3236 Wison DR NW Walker MI. 49534
(800) 253-3893
www.oliverquality.com

## SAFETY INSTRUCTIONS

# WARNING

**VARIOUS SAFETY DEVICES AND METHODS OF GUARDING HAVE BEEN PROVIDED ON THIS MACHINE. IT IS ESSENTIAL HOWEVER THAT THE MACHINE OPERATORS AND MAINTENANCE PERSONNEL OBSERVE THE FOLLOWING SAFETY PRECAUTIONS. IMPROPER INSTALLATION, MAINTENANCE, OR OPERATION OF THIS EQUIPMENT COULD CAUSE SERIOUS INJURY OR DEATH.**

1. Read this manual before attempting to operate your machine. Never allow an untrained person to operate or service this machine.

2. Connect the machine to a properly grounded electrical supply that matches the requirements shown on the electrical specification plate and follow all specifications of local electrical codes.

3. Disconnect and lock-out the machine from the power supply before cleaning or servicing.

4. Check and secure all guards before starting the machine.

5. Observe all caution and warning labels affixed to the machine.

6. Use only proper replacement parts.

7. Do not wear loose fitting clothing or loose hair when working near this machine. Shirt tails should be tucked in.

8. Wear proper, personal, protective, safety equipment.

9. Keep Hands away from the moving parts of this machine while it is in operation.

10. In addition to these general safety instructions, please follow the more specific safety instructions as specified in the operating instruction manual.

11. The on/off switch is marked with international symbols for on and off. See below.

**ON** **OFF**

Oliver Packaging & Equipment Company
3236 Wison DR NW Walker MI. 49534
(800) 253-3893
www.oliverquality.com

## DESCRIPTION/SPECIFICATIONS

Description

The Model 738 Mini Chip Slicer is a compact, countertop slicer designed to reprocess shrink - specifically bagels and baguettes - into a marketable bakery/foodservice product. Designed with reciprocating blade technology, the Mini Chip Slicer easily slices through day-old bagels and baguettes.

The Model 738 Mini Chip Slicer is constructed of stainless and painted steel. Easy to clean, the Mini Chip Slicer food contact surfaces - infeed cover, pusher, handle, and blade cartridge - can be removed without the use of tools for cleaning and sanitizing in a dishwasher. Blade changes are simple: simply remove the blade cartridge, replacing it with an OEM cartridge. No tools or service company required.

Specifications

*Space Requirements:*
***Model 738*** *(All Dimensions are Approximate)*

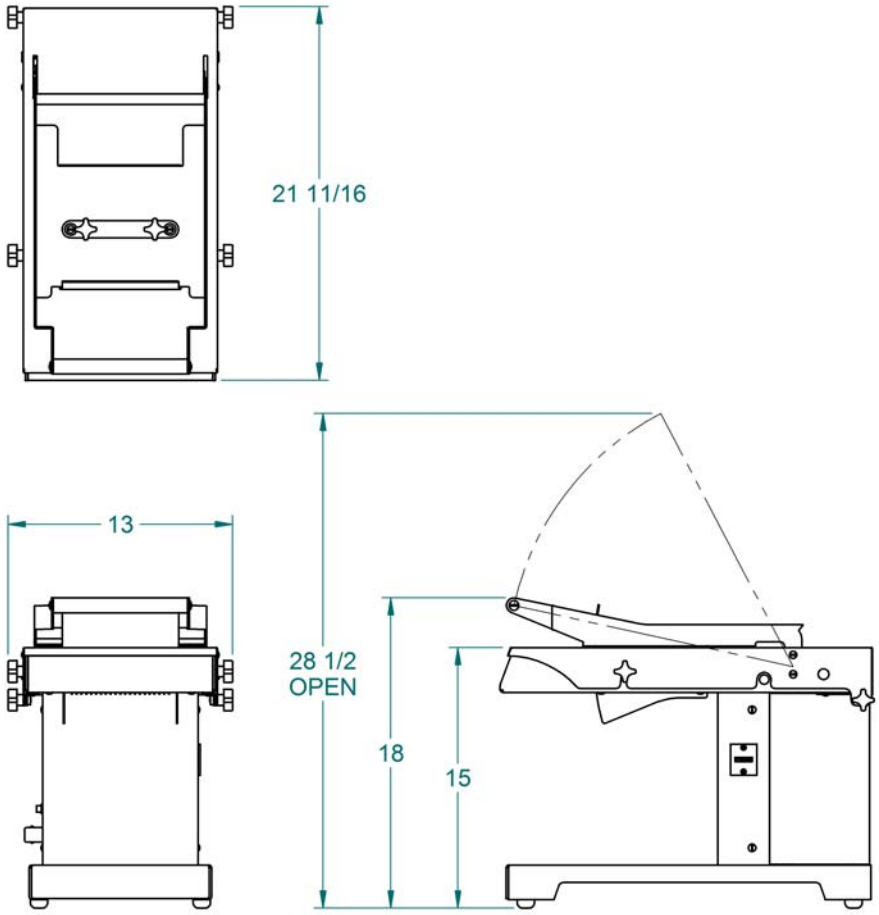

*Product Capacities:*

| | |
|---|---|
| Length | 6 inches |
| Width | 6 inches |
| Height | 2 inches |

*Standard Electrical Options: (Others consult factory)*
1 phase, 60 Hz, 120VAC, 2 Amps.

*Shipping Weight:*
100 lbs. (approximate)

*Net Weight:*
80 lbs. (approximate)

## INSTALLATION INSTRUCTIONS

Before starting the Installation process make sure you observe the following caution notes.

## CAUTION

**THE SLICER IS HEAVY, USE PROPER TECHNIQUE WHEN LIFTING OR MOVING.**

Select a location for your slicer which has a substantial mounting surface and which has electrical service compatible with the load the machine will place on it as indicated on the electrical data plate of the machine. Position the machine while it is still in its packaging as close as possible to the desired end location.

Oliver Packaging & Equipment Company
3236 Wison DR NW Walker MI. 49534
(800) 253-3893
www.oliverquality.com

## OPERATING INSTRUCTIONS

## WARNING

**ALWAYS USE CARE WHENEVER WORKING NEAR THE CUTTING KNIVES.**

To operate the slicer, follow these simple steps:

1. Power unit on and lift the handle. The unit will automatically shut off.
2. Place the product atop the blades towards the front of the cutting area.
3. Using the handle, apply slight pressure in a downward motion until the handle comes to a stop. Repeat steps 1-3.
4. When finished, power the unit off.

## NOTE

**THE UNIT WILL CONTIUE TO RUN UNLESS THE HANDLE IS LIFTED TO THE STARTING POSITION. PLEASE REMEMBER TO POWER OFF THE UNIT WHEN SLICING IS COMPLETE.**

**STEP 1** **STEP 2** **STEP 3**

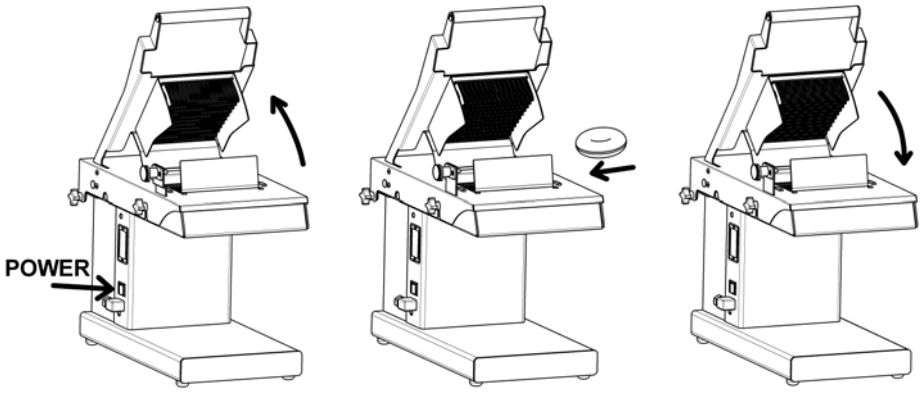

THIS PAGE WAS INTENTIONALLY
LEFT BLANK.

## TROUBLE SHOOTING

## WARNING

**ALWAYS DISCONNECT THE SLICER FROM THE POWER SUPPLY BEFORE ATTEMPTING ANY TYPE OF MAINTENANCE TASK, INCLUDING TROUBLESHOOTING.**

*Slicer will not start*

- The machine is not plugged in.
- There is no power at the outlet.
- The cover is not on correctly. The cover has an interlocking mechanism that allows the unit to operate only if the cover is on.
- Broken wire or disconnected terminals.
- The switch actuator cam is not contacting the switch. Lift the cover and adjust the screw with a flat head screw driver.

*Pusher interference when slicing product*

- Loosen pusher and adjust side to side to make sure there is no interference.
- Blade frame is not correctly placed on slide blocks.
- Pusher blades are bent or damaged. Contact dealer or factory.

*Extreme effort needed to slice product*

- Blades are dull. Contact dealer or factory for replacements.
- Product is too stale or old. The slicer is designed to be most efficient with slicing fresh or day old product.

Oliver Packaging & Equipment Company
3236 Wison DR NW Walker MI. 49534
(800) 253-3893
www.oliverquality.com

## CLEANING AND MAINTENANCE

## WARNING

**ALWAYS UNPLUG THE SLICER BEFORE PERFORMING ANY TYPE OF MAINTENANCE TASK.**

To prepare your unit for cleaning please refer to the pictorial below for step by step instructions.

### REMOVING THE BLADE CARTRIDGE

1. Loosen the (2) two thumb screws on the outside of the machine, tip the cover assembly back as shown in figure A. Lift the cover props on each side of the frame securely hold the cover open as shown in figure B.

Figure A

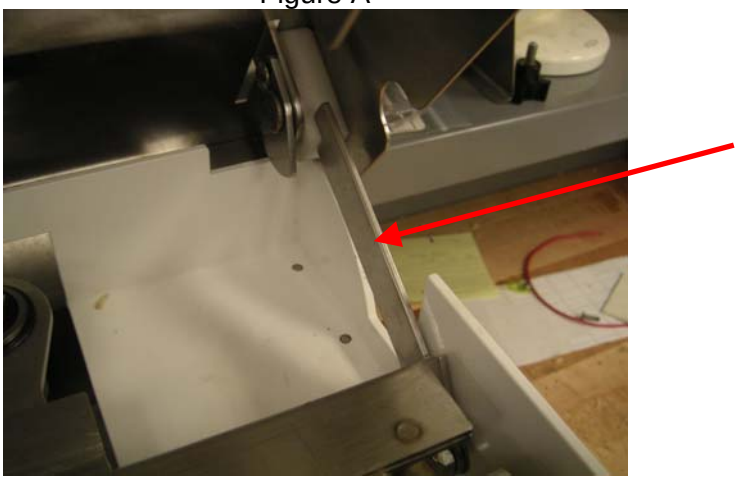

Figure B

2. Loosen and remove the (4) thumbscrews atop the post hold down blocks (Fig. A) and adjust the drive assembly so that the blade frame cartridge is in the closed position as shown below (Fig. B). This is done by turning the knob on the drive assembly so that the channels on the blade frames are close together.

**NOTE:** The protective blade cover will only fit on the cartridge when it is in the closed configuration. This helps with the cleaning and re-assembly processes.

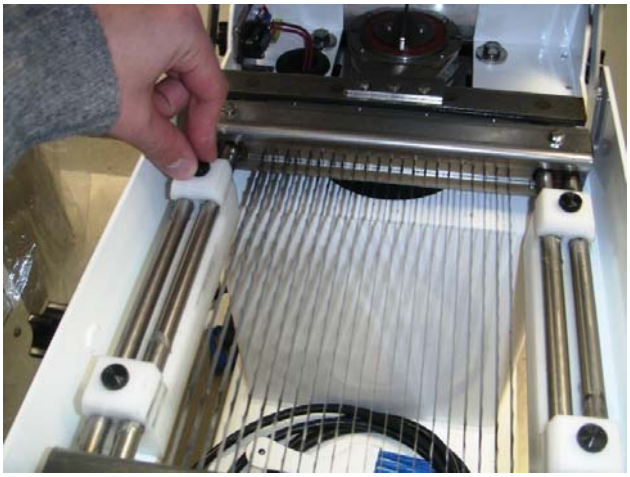

Figure A

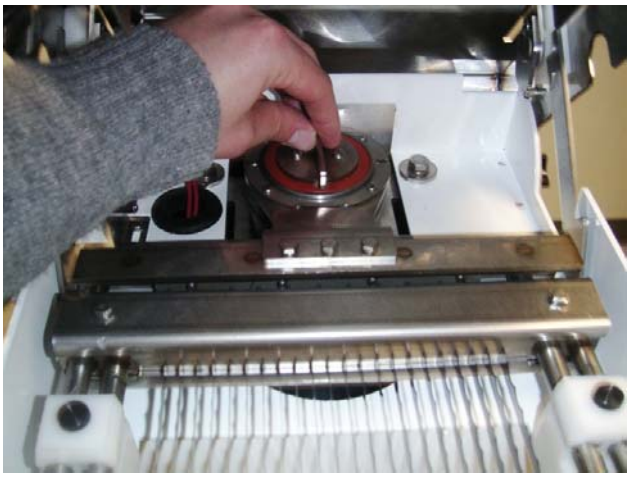

Figure B

## CAUTION

**USE CAUTION WHILE ADJUSTING THE DRIVE ASSEMBLY. THE BLADES ARE EXPOSED AND VERY SHARP.**

3. Place the protective blade cover atop the blade cartridge by hooking the cover around the pin plate near the drive assembly.

4. Lay the cover down on top of the blade cartridge and fasten with the thumb screw to the blade cartridge by threading the thumb screw into the hole provided.

5. To remove the protected blade frame cartridge simply grip the front of the assembly and the tab provided on the cover and pull up.

## WARNING

**NEVER REMOVE BLADE FRAME ASSEMBLY WITHOUT PROTECTIVE GUARD. BLADES ARE EXTREMELY SHARP AND IF HANDLED INCORRECTLY MAY RESULT IN SERIOUS INJURY.**

## CLEANING

Now that the blade frames have been safely removed you can now proceed with removing any crumb deposits within the machine. A brush, compressed air, or a vacuum are helpful tools for this task.

## REPLACING THE BLADE CARTRIDGE

6. Make sure that the drive assembly is in the correct position as shown below.

**NOTE:** The blade cartridge will only fit back into the machine with the drive assembly in the correct configuration below. The Bearing holes need to be at the position nearest each other.

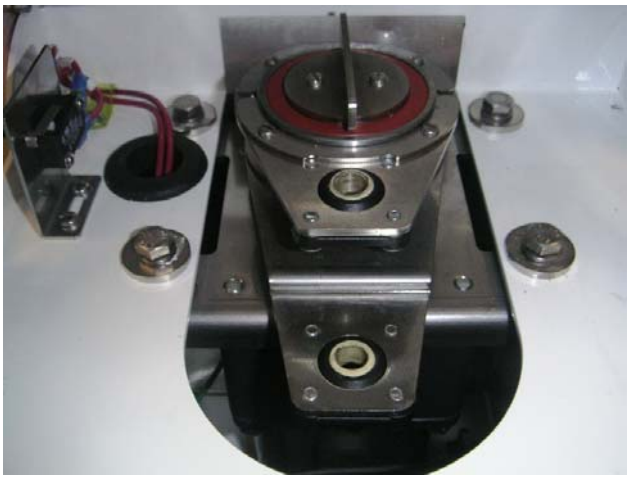

**CORRECT**

**INCORRECT**

7. With the protective blade guard in place locate the center of the bearings in the drive assembly with the pin plates attached to the blade cartridge.

8. Once the drive assembly has been located, place the blade cartridge posts in the tracks on the base assembly. Apply slight pressure to the front and rear of the blade cartridge to ensure the proper fit in to the drive assembly and slide blocks. You can now replace the post hold down blocks that you set aside in step 5.

9. Remove the protective blade cover by loosening the thumb screw and unhooking from the pin plate.

**NOTE:** The cover assembly will not fit on the unit if the protective blade cover is left in place.

10. Lower the cover assembly by placing one hand on the front of the cover and placing both of the cover props in their closed position. Gently lower the cover assembly until it stops.

11. Lastly, after the cover has been lowered into position firmly tighten all thumb screws around the perimeter of the unit.

## CHANGING THE BLADES

Oliver Packaging and Equipment suggests that blades not be changed in the field due to the potential for injury. We offer a blade frame cartridge exchange program for when blades become dull. Please contact your dealer or the Oliver service department.

## LUBRICATION

## WARNING

**ALWAYS DISCONNECT THE SLICER FROM THE POWER SUPPLY BEFORE ATTEMPTING ANY TYPE OF MAINTENANCE TASK.**

Oliver suggests a vegetable based aerosol product be used to gently coat the blades on occasion. Once a month put a drop of a food approved lubricant on the plastic slide blocks on the inside of the unit. This will increase the longevity of the internal parts of your slicer.

## NOTE

**NEVER OIL OR GREASE THE MOTOR.**

## GENERAL CLEANING

Use a mild detergent solution to clean the exterior surfaces. Periodically remove all covers and brush or blow, (if compressed air is available), all foreign material from all surfaces, especially moving parts.

Oliver Packaging & Equipment Company
3236 Wison DR NW Walker MI. 49534
(800) 253-3893
www.oliverquality.com

# MAIN FRAME

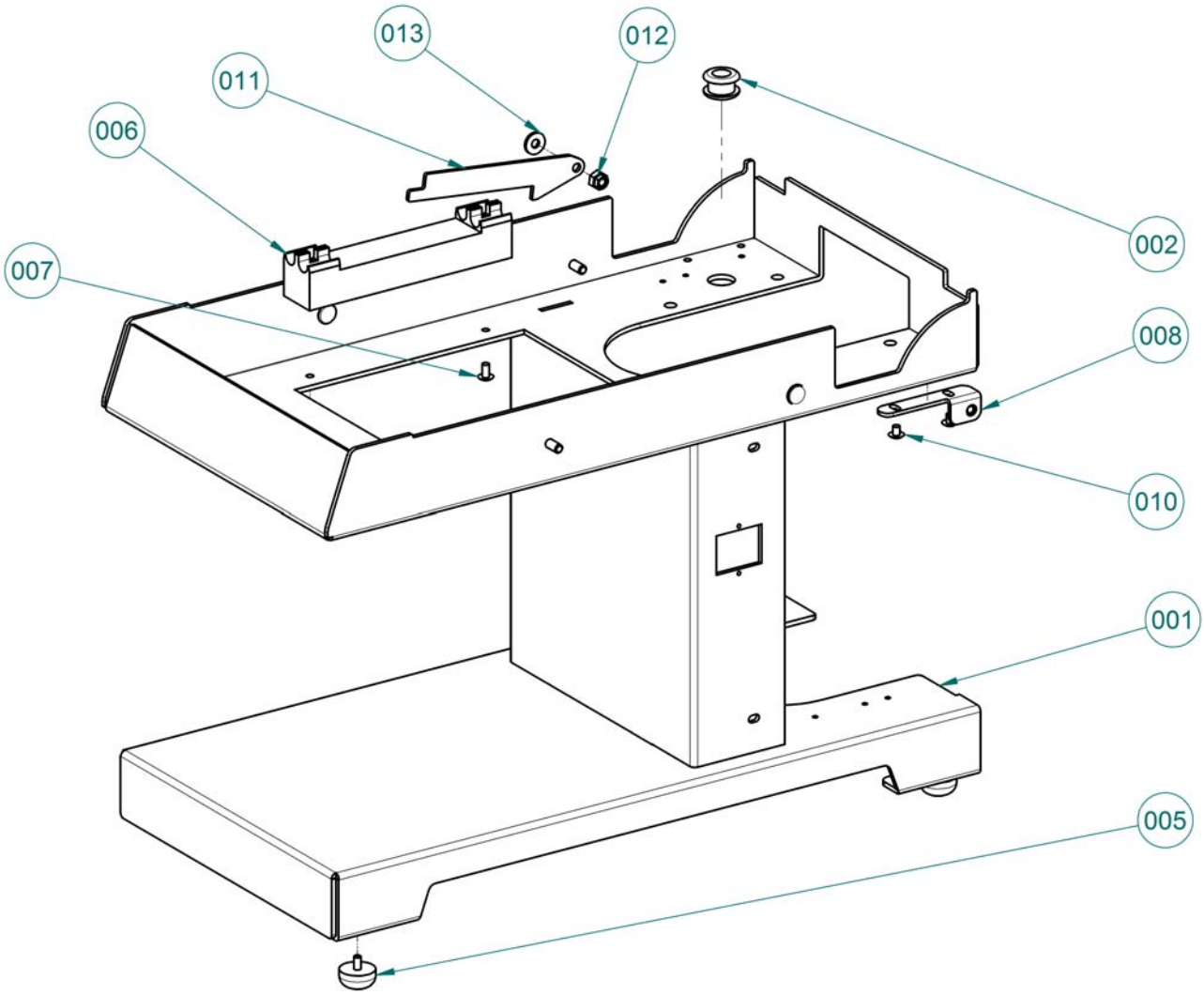

Oliver Packaging & Equipment Company
3236 Wison DR NW Walker MI. 49534
(800) 253-3893
www.oliverquality.com

## MAIN FRAME PARTS LIST

| ITEM NO | PART DESCRIPTION | PART NUMBER |
|---|---|---|
| 001 | Base | 0738-0002-1 |
| 002 | Grommet-Rubber | 5767-1207 |
| 003* | Nut-10-24 Stainless Acorn | 5832-0585 |
| 004* | Washer-#10 Spring Lock Stainless | 5851-9355 |
| 005 | Bumper-Rubber w/ Screw | 5902-0035 |
| 006 | Block-Guide | 0738-0003-1 |
| 007 | Screw-10-24 x 3/8 Stainless Truss | 5843-5384 |
| 008 | Bracket-RH Cover Attachment | 0738-0004-0001 |
| 009* | Bracket-LH Cover Attachment | 0738-0004-0002 |
| 010 | Screw-10-24 x 1/4 Stainless Truss | 5843-5383 |
| 011 | Plate-Prop | 0738-0005-1 |
| 012 | Nut-1/4-20 Stainless Locking | 5831-9087 |
| 013 | Washer-1/4 Flat Stainless | 5851-9304 |

*Items not shown

FOR SERVICE PARTS CALL OLIVER PACKAGING & EQUIPMENT @ 800-253-3893

# ELECTRICAL PARTS

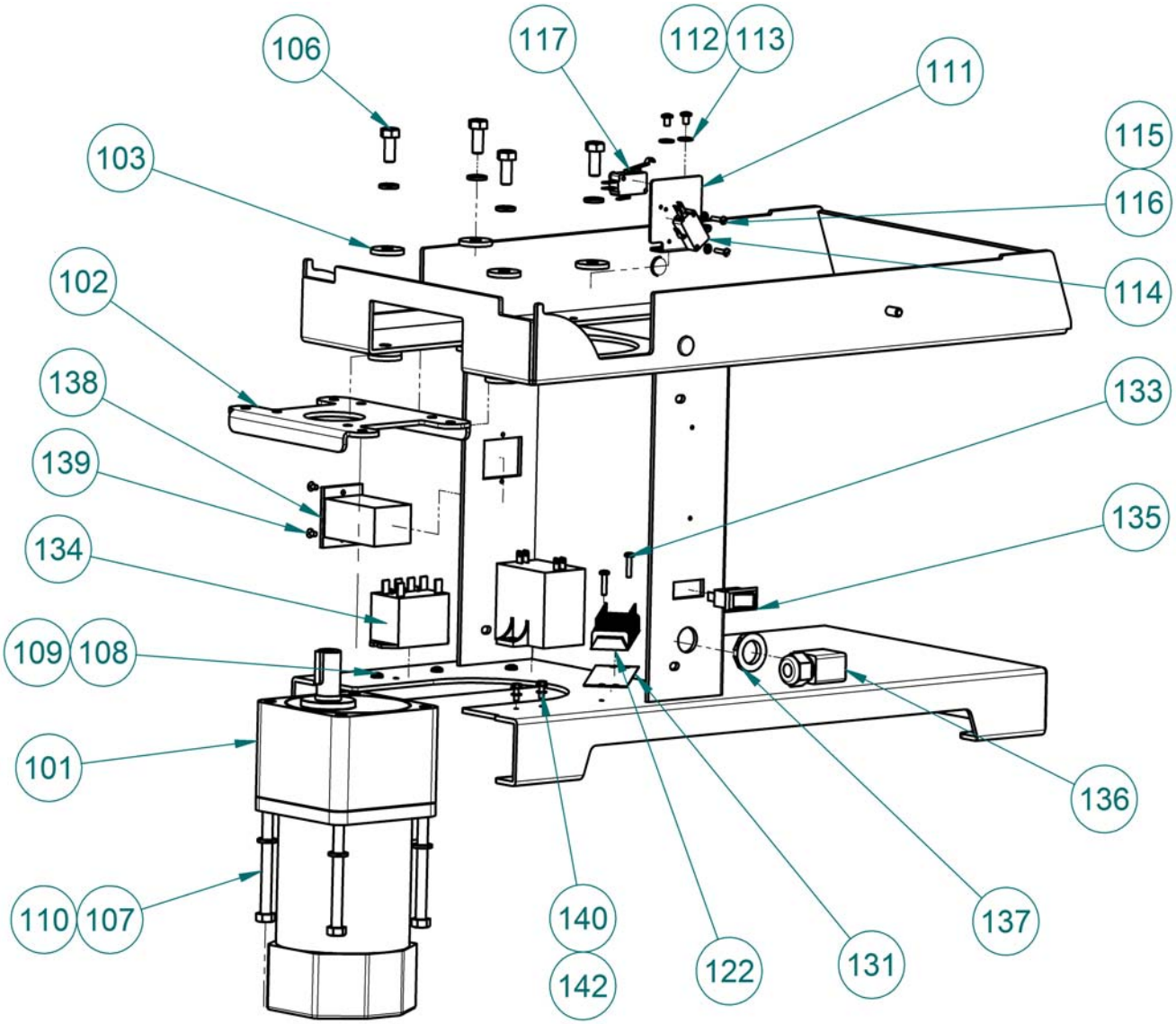

Oliver Packaging & Equipment Company
3236 Wison DR NW Walker MI. 49534
(800) 253-3893
www.oliverquality.com

## ELECTRICAL PARTS LIST

| ITEM NO | PART DESCRIPTION | PART NUMBER |
|---|---|---|
| 101 | Assembly-Motor Cord | 0738-25505K |
| 102 | Plate-Motor Mount | 0738-0045 |
| 103 | Spacer | 0738-0046 |
| 106 | Screw-5/16-18 x ¾ Stainless Hex | 5843-1028 |
| 107 | Screw-5/16-18 x 3 1/2 Stainless Hex | 5843-1039 |
| 108 | Screw-8-32 x 5/16 Stainless Pan | 5843-5552 |
| 109 | Washer-#8 Shake Proof Stainless | 5851-9130 |
| 110 | Washer-5/16 Lock Stainless | 5851-9358 |
| 111 | Mount-Switch | 0738-0008 |
| 112 | Screw-8-32 x ¼ Stainless Pan | 5843-5551 |
| 113 | Washer-#8 Flat Stainless | 5851-8108 |
| 114 | Switch-SM Basic w/ Roller | 5757-8002 |
| 115 | Screw-4-40 x 1/2 Stainless Pan | 5843-5524 |
| 116 | Washer-#4 Shake Proof Stainless | 5851-9127 |
| 117 | Switch-SM Basic | 5757-8001 |
| 122 | Block-Terminal 8 Row | 5770-7451 |
| 131 | Strip-Marker 8 Row | 5770-7328 |
| 133 | Screw-M3.5 x 16mm Stainless Pan | 8843-2265 |
| 134 | Relay | 5749-8027 |
| 135 | Switch-Rocker | 5757-3314 |
| 136 | Bushing-Strain Relief 90° | 5765-1010 |
| 137 | Nut-PG-11 Plastic Lock | 5766-7786 |
| 138 | Counter-5 Digit Mini | 5712-9080 |
| 139 | Screw-6-32 x 1/4 Stainless Truss | 5843-5360 |
| 140 | Screw-6-32 x 3/8 Green Grounding | 5841-9501 |
| 142 | Washer-#6 Shake Proof Stainless | 5851-9129 |

FOR SERVICE PARTS CALL OLIVER PACKAGING & EQUIPMENT @ 800-253-3893

THIS PAGE WAS INTENTIONALLY
LEFT BLANK.

Oliver Packaging & Equipment Company
3236 Wison DR NW Walker MI. 49534
(800) 253-3893
www.oliverquality.com

## DRIVE COMPONENTS

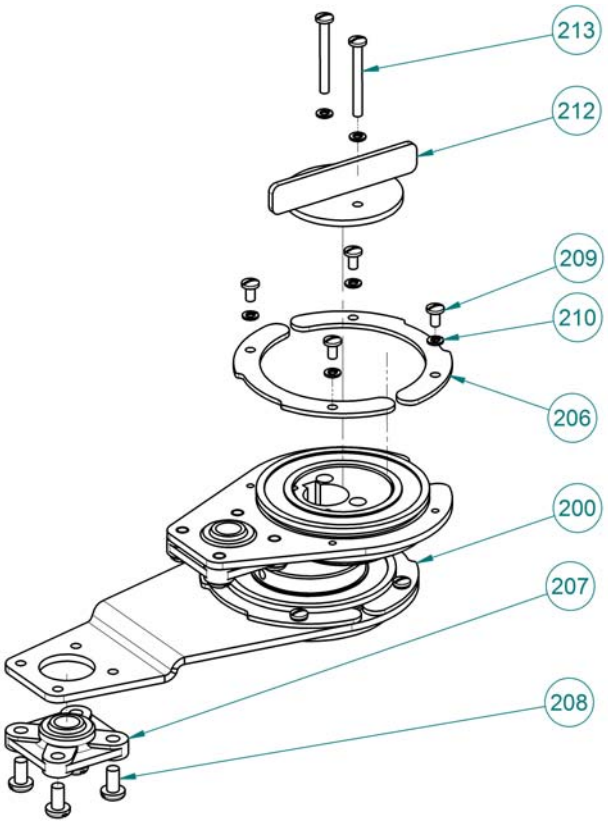


## DRIVE COMPONENTS PARTS LIST

| ITEM NO | PART DESCRIPTION | PART NUMBER |
|---|---|---|
| 200* | Assembly-Drive | 0738-25012K |
| 206 | Clip-Bearing | 0738-0049 |
| 207 | Bearing-10mm Spherical Flange Mount | 5251-3591 |
| 208 | Screw-10-24 x 3/8 Stainless Pan | 5843-5384 |
| 209 | Screw-6-32 x 1/4 Stainless Pan | 5843-5541 |
| 210 | Washer-#6 Lock Stainless | 5851-9353 |
| 212 | Knob | 0738-0051 |
| 213 | Screw-6-32 x 1 ¼ Stainless Pan | 5843-5547 |

Replacements for 200 are ordered assembled with fasteners. Parts may not be substituted within the assembly other than those called out.

FOR SERVICE PARTS CALL OLIVER PACKAGING & EQUIPMENT @ 800-253-3893

Oliver Packaging and Equipment Company (800) 253-3893
3236 Wilson DR NW Walker, MI 49534 www.oliverquality.com

## SLICE PARTS/COVERS

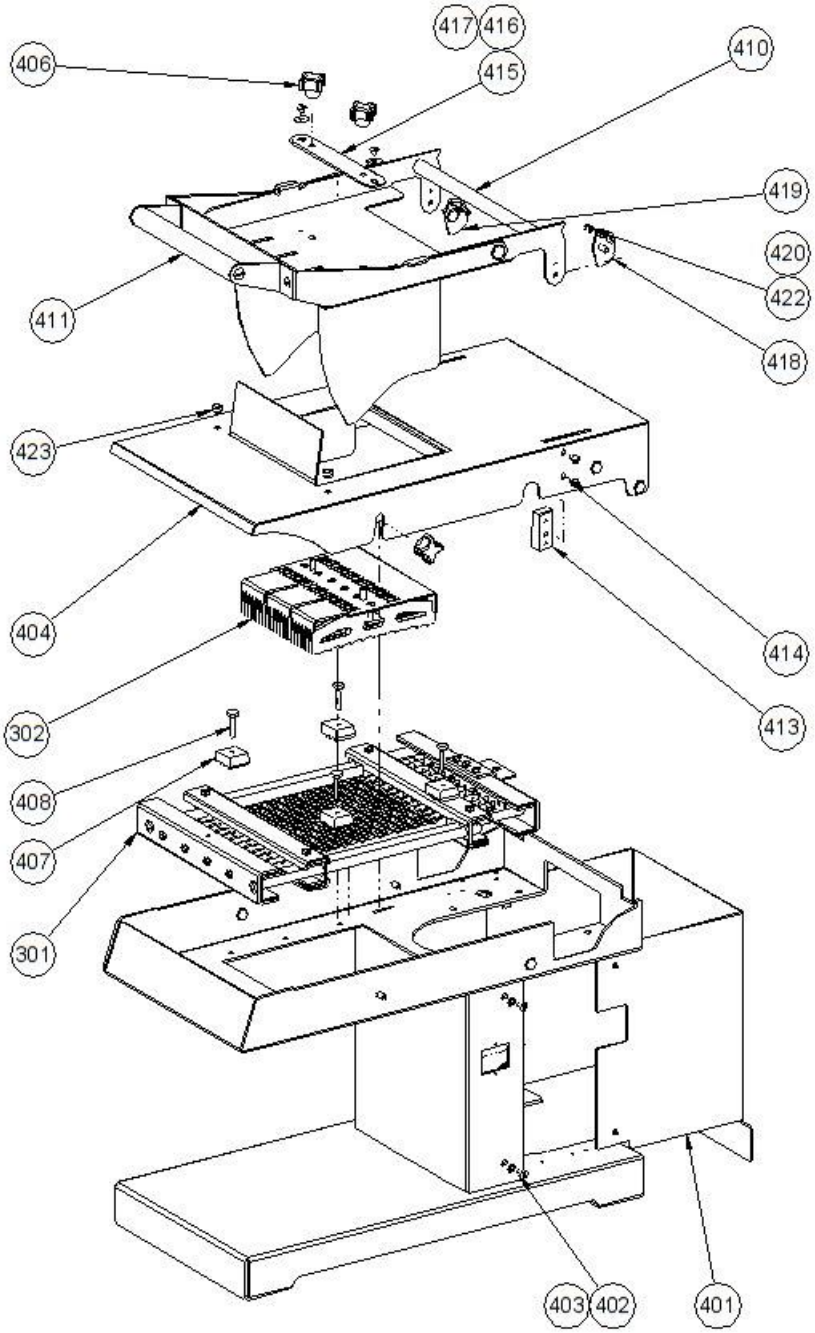


**REV 4-28-15**

Oliver Packaging and Equipment Company (800) 253-3893
3236 Wilson DR NW Walker, MI 49534 www.oliverquality.com

## SLICE PARTS/COVERS PARTS LIST

| ITEM NO | PART DESCRIPTION | PART NUMBER |
|---|---|---|
| 301 | Cartridge-Blade Frame | 0738-25XXXK |
| 302 | Assembly-Pusher | 0738-25XXXK |
| 303 | Cover-Blade Frame Safety | 0738-0024K |
| 401 | Cover-Motor | 0738-0033-1 |
| 402 | Screw-10-24 x 3/8 Stainless Truss | 5843-5384 |
| 403 | Washer-#10 Shake Proof Stainless | 5851-9394 |
| 404 | Cover-Base | 0738-0034-1 |
| 406 | Knob-1/4-20 4 Prong Plastic | 5911-7034 |
| 407 | Block-Top Guide | 0738-0052 |
| 408 | Screw-8-32 x 1 Stainless Thumb | 0738-25504K |
| 411 | Handle Assembly | 0738-25037K |
| 413 | Block-Handle Hinge | 0738-0040 |
| 414 | Screw-10-24 x 3/8 Stainless Truss | 5843-5384 |
| 415 | Plate-Pusher Centering | 0738-0041 |
| 416 | Screw-10-32 x 1/4 Stainless Truss | 5843-5390 |
| 417 | Washer-#10 Fender Stainless | 5851-9324 |
| 418 | Plate-LH Cover Cam | 0738-0042-0002 |
| 419 | Plate-RH Cover Cam | 0738-0042-0001 |
| 420 | Screw-8-32 x 1/4 Stainless Round | 5843-5232 |
| 422 | Washer-#8 Spring Lock Stainless | 5851-9354 |
| 423 | Bumper-Press In | 5902-0023 |

*Items 301 and 302 are replaced fully assembled. Specify slice thickness when ordering.
**Item 303 is provided with each blade frame assembly and is used for safe handling. Not Shown.
FOR SERVICE PARTS CALL OLIVER PACKAGING & EQUIPMENT @ 800-253-3893

REV 1-26-18

Oliver Packaging & Equipment Company
3236 Wison DR NW WALKER MI. 49534
(800) 253-3893
www.oliverquality.com

# WIRING DIAGRAM 1-60-120

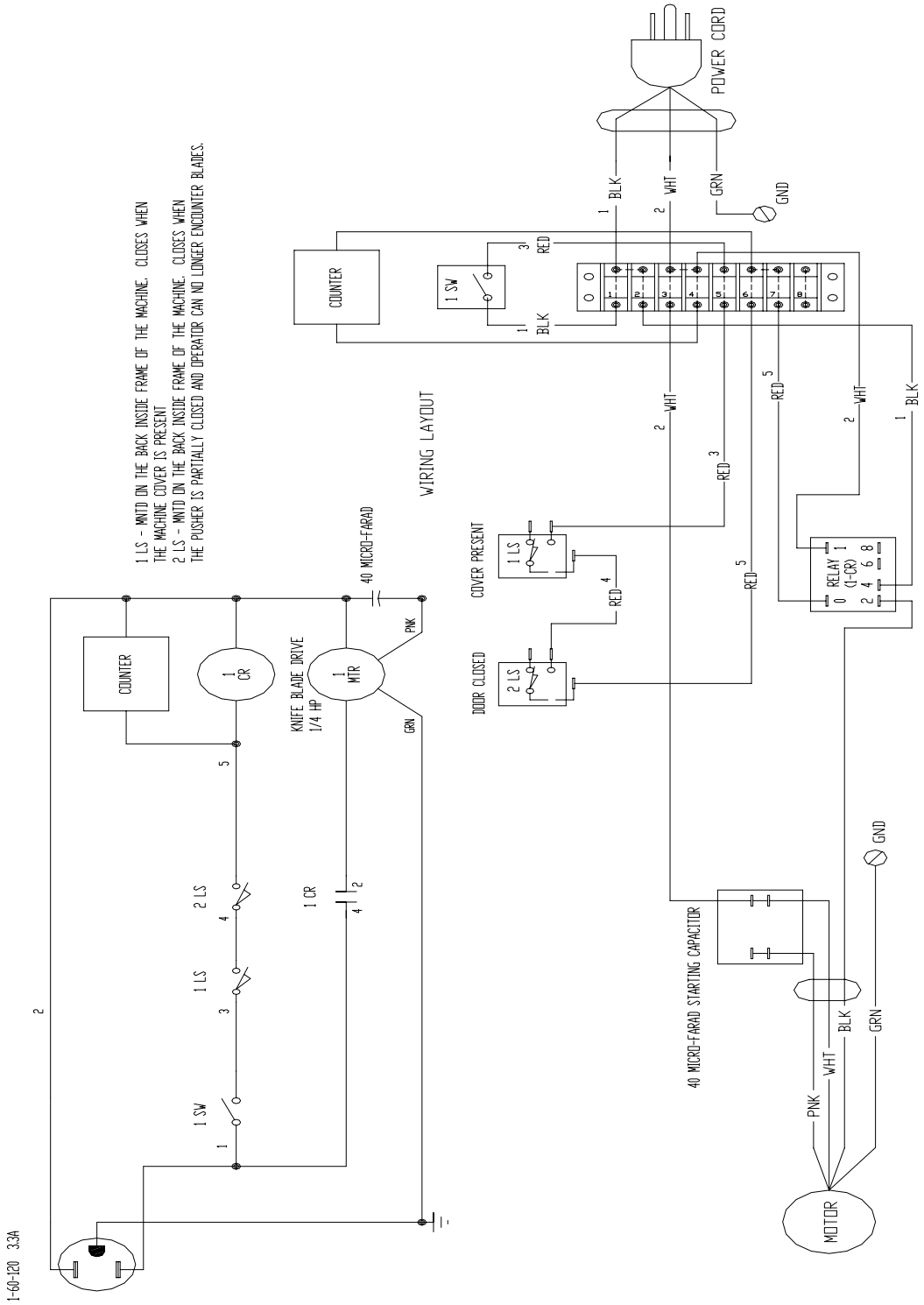

Oliver Packaging & Equipment Company
3236 Wison DR NW Walker MI. 49534
(800) 253-3893
www.oliverquality.com

# WARRANTY

PARTS
Oliver Packaging & Equipment Company warrants that if any part of the equipment (other than a part not manufactured by Oliver Packaging & Equipment ) proves to be defective (as defined below) within one year after shipment, and if Buyer returns the defective part to Oliver Packaging & Equipment within one year, Freight Prepaid to Oliver Packaging & Equipment plant in Grand Rapids, MI, then Oliver Packaging & Equipment , shall, at Oliver Packaging & Equipment option, either repair or replace the defective part, at Oliver Packaging & Equipment expense.

LABOR
Oliver further warrants that equipment properly installed in accordance with our special instructions, which proves to be defective in material or workmanship under normal use within one (1) year from installation or one (1) year and three (3) months from actual shipment date, whichever date comes first, will be repaired by Oliver Packaging & Equipment or an Oliver Packaging & Equipment Authorized Service Dealer, in accordance with Oliver Packaging & Equipment published Service Schedule.

For purposes of this warranty, a defective part or defective equipment is a part or equipment which is found by Oliver Packaging & Equipment to have been defective in materials workmanship, if the defect materially impairs the value of the equipment to Buyer. Oliver Packaging & Equipment has no obligation as to parts or components not manufactured by Oliver Packaging & Equipment, but Oliver Packaging & Equipment assigns to Buyer any warranties made to Oliver Packaging & Equipment by the manufacturer thereof.

This warranty **does not** apply to:
1. Damage caused by shipping or accident.
2. Damage resulting from improper installation or alteration.
3. Equipment misused, abused, altered, not maintained on a regular basis, operated carelessly, or used in abnormal conditions.
4. Equipment used in conjunction with products of other manufacturers unless such use is approved by Oliver Packaging & Equipment Company in writing.
5. Periodic maintenance of equipment, including but not limited to lubrication, replacement of wear items, and other adjustments required due to installation, set up, or normal wear.
6. Losses or damage resulting from malfunction.

The foregoing warranty is in lieu of all other warranties expressed or implied AND OLIVER PACKAGING & EQUIPMENT COMPANY MAKES NO WARRANTY OF MERCHANTABILITY OR FITNESS FOR PURPOSE REGARDING THE EQUIPMENT COVERED BY THIS WARRANTY. Oliver Packaging & Equipment Company neither assumes nor authorizes any person to assume for it any other obligations or liability in connection with said equipment. OLIVER PACKAGING & EQUIPMENT COMPANY SHALL NOT BE LIABLE FOR LOSS OF TIME, INCONVENIENCE, COMMERCIAL LOSS, INCIDENTAL OR CONSEQUENTIAL DAMAGES.

Oliver Packaging & Equipment Company
3236 Wison DR NW Walker MI. 49534
(800) 253-3893
www.oliverquality.com

# WARRANTY PROCEDURE

1. If a problem should occur, either the dealer or the end user must contact the Parts and Service Department and explain the problem.

2. The Parts and Service Manager will determine if the warranty will apply to this particular problem.

3. If the Parts and Service Manager approves, a Work Authorization Number will be generated, and the appropriate service agency will perform the service.

4. The service dealer will then complete an invoice and send it to the Parts and Service Department at Oliver Packaging & Equipment Company.

5. The Parts and Service Manager of Oliver Packaging and Equipment Company will review the invoice and returned parts, if applicable, and approve for payment.

Oliver Packaging & Equipment Company
3236 WISON DR NW WALKER MI. 49534
(800) 253-3893
www.oliverquality.com

# RETURNED PARTS POLICY

This policy applies to all parts returned to the factory whether for warranted credit, replacement, repair or re-stocking.

Oliver Packaging and Equipment Company requires that the customer obtain a Return Material Authorization (RMA) number before returning any part. This number should appear on the shipping label and inside the shipping carton as well. All parts are to be returned prepaid**.** Following this procedure will insure prompt handling of all returned parts.

To obtain an RMA number contact the Repair Parts Deptartment toll free at (800) 253-3893.

Parts returned for re-stocking are subject to a **RE-STOCKING CHARGE**.

Thank you for your cooperation,

Repair Parts Manager
Oliver Packaging and Equipment Company

Commercial Kitchen Equipment Parts

Find more Oliver equipment resources at

**parthubz.com/equipment/oliver**

---

## Need parts or service?

Call 833-700-8006

support@parthubz.com

parthubz.com