Commercial Kitchen Equipment Parts

OMEGA 8007

Parts Manual

Provided by PartHubz

parthubz.com

833-700-8006 | support@parthubz.com

J8007-J8008 Parts Diagram

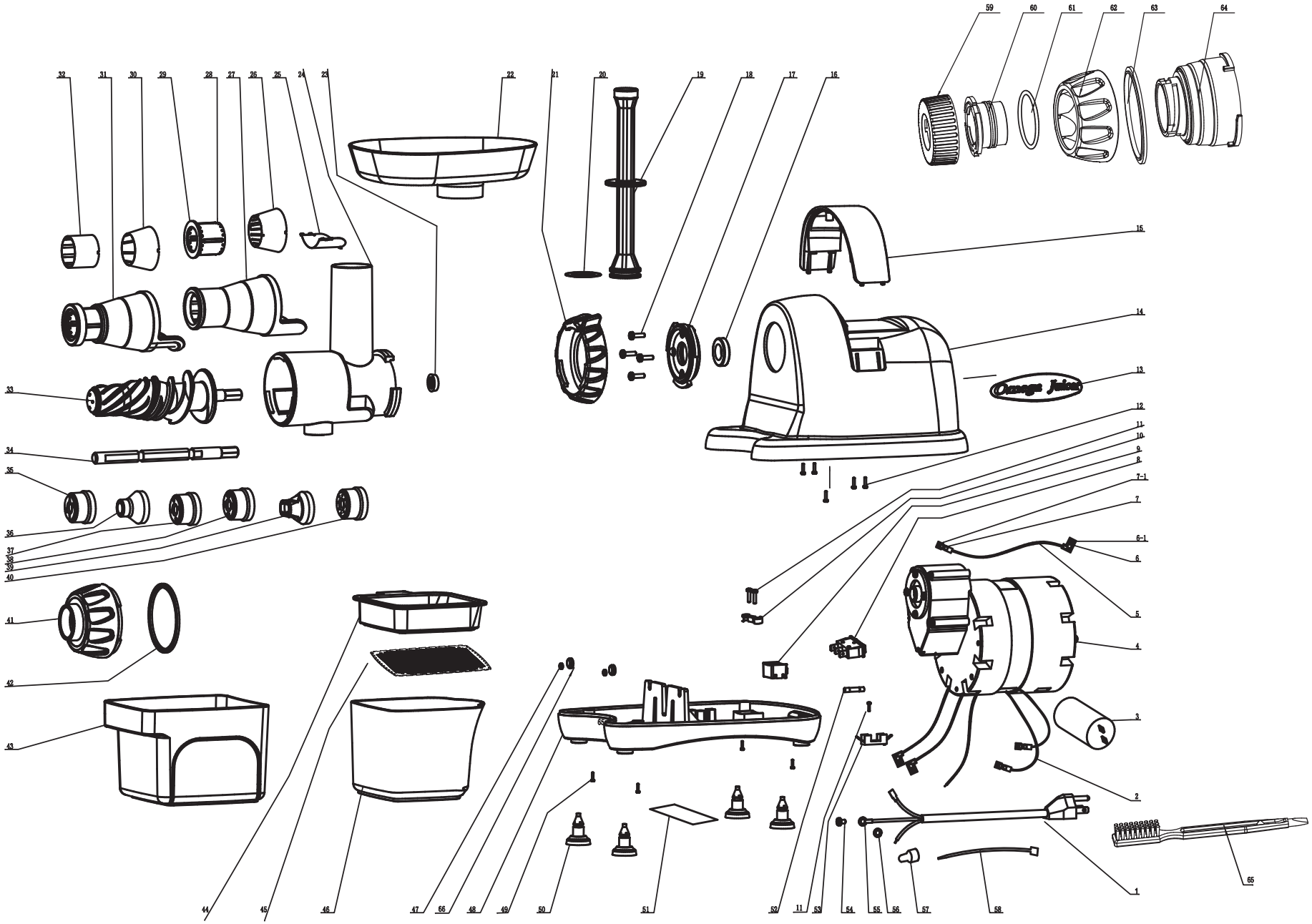

J8007/8008 Parts List

Diagram #	Part #	Description	Extended Description	Qty Per
3	PCAP8	Capacitor J8007/8008	120V	1
	PCAP82	Capacitor J8227/8228	240V	1
4	PMOTOR878	Motor J8007/8008	120V	1
	PMOTOR82278	Motor J8227/8228	240V/50-60Hz/1Ph	1
8	PSWITCH878	Power Switch 120V/240V	8007/8008	1
9	PJ8-9	Silicon Underlay		1
10	PJ8-10	Clip		1
11	PJ8-11	Screw #1		3
12	PJ8-12	Screw #2		5
13	PLABEL878B	Label Omega Black		1
14-15	PBASEHS87S	Base Housing 8007 Silver	Includes handle	1
	PBASEHS88C	Base Housing 8008 Chrome	Includes handle	1
16	PJ8-16	Ring Seal		1
17	PJ8-17	Mounting Disk		1
18	PJ8-18	Screw #3		4
19-20	PPLUNG878	Plunger 8007/8008		1
21	PLOCK878B	Locking Clip Black	8007/8008	1
22	PHPPR878B	Hopper/Funnel 8007/8 Black		1
23-24	PDRM878	Drum 8007/8008		1
27	PBLANK878	Blank Cone 8007/8 Black		1
31	PSCRN878	Juicing Screen 8007/8		1
33	PSCREW878	Auger 8007/8008 Black		1
35-40	PNOZZ878BSET	Complete Nozzle Set 8007/8008	Black, 6 PCS	1
41-42	PDRUMCAP878B	Drum Cap 8007/8008 Black		1
43	PBWL878P	Pulp Bowl 8007/8008		1
44-45	PSIEVE878	Straining Sieve 8007/8008		1
46	PBWL878J	Juice Bowl 8007/8008		1
47	PJ8-47	Nut #1		2
48	PBASEPL878B	Base Plate 8007/8008 Black		1
49	PJ8-49	Screw #4		4
50	PFEET878	Rubber Foot 8007/8008	One Foot Only	4
52	PJ8-52	Fuse		1
53	PJ8-53	Fuse Holder		1
54	PJ8-54	Screw #5		1
55-60	PDRUMCAPA878B	Adjustable Drum Cap Assembly	8007/8008, Black	1
55	PJ8-55	Adjustment Knob		1
56	PJ8-56	Adjustment Inner Ring		1
57	PJ8-57	Adjustment Seal		1
58	PJ8-58	Adjustable End Cap		1
59	PJ8-59	Adjustable End Cap Seal		1
60	PJ8-60	Adjustable End Cap Inner Ring		1

Commercial Kitchen Equipment Parts

Find more Omega equipment resources at

parthubz.com/equipment/omega

Need parts or service?

Call 833-700-8006

support@parthubz.com

parthubz.com