Commercial Kitchen Equipment Parts

PITCO SELVRF

Pitco SELVRF service-manual

Provided by PartHubz

parthubz.com

833-700-8006 | support@parthubz.com

TROUBLESHOOTING AND SERVICE MANUAL

Covering SELVRF

Disclaimer: By performing any service on the intended equipment of this manual, you agree to assume all risks involved with performing the service including but not limited to damage to property, personal injury and loss of income. Pitco/Magikitch'n/Anets/Perfect Fry recommends all service to be performed by a qualified service agent. Improper service or maintenance can cause serious property damage, personal injury or death. It is the responsibility of the person servicing the equipment to follow all safety procedures and verify proper operation of the equipment after performing service. Read the operations manual prior to operating or servicing any equipment. Ensure to review all notices, cautions, warnings and dangers noted in the operations manual.

Table of Contents

SAFETY WARNINGS.....3-4
SERIAL NUMBER BREAKDOWN.....5
THEORY OF OPERATION.....6
BASIC TROUBLESHOOTING.....7
PREPAIRING TO SERVICE APPLIANCE.....8
COMPONENT IDENTIFICATION.....8-9
COMPUTER DISPLAYS.....10-11
COMPONENT TROUBLESHOOTING.....12-18
- ⇒ Temperature Probe 12
- ⇒ Oil Level Probe 12
- ⇒ 24VAC Transformer.....12
- ⇒ DC POWER SUPPLY.....13
- ⇒ Element 13
- ⇒ Contactors 13
- ⇒ Actuators 14
- ⇒ Hi-Limit Switch 14
- ⇒ Auto Filter Board 15-17
- ⇒ Filter Pump and Motor.....18
- ⇒ Pan In Place/Pan Not Empty Switches 18

TEMPERATURE PROBE RESISTANCE CHART.....19
SCHEMATICS 20-24
NOTES 25
CONTACT THE FACTORY 26

TO THE PURCHASER, OWNER AND STORE MANAGER

Please review these warnings prior to posting them in a prominent location for reference.

WARNING

DO NOT store or use gasoline or other flammable vapors and liquids in the vicinity of this or any other appliance.

WARNING

Improper installation, alteration, service or maintenance can cause property damage, injury or death. Read the installation, operating and maintenance instructions thoroughly before installing or servicing this appliance.

WARNING

Installation and all connections must be made according to national and local regulations and codes in force.

WARNING

A country approved all pole circuit breaker with a minimum open contact gap of 3mm must be used for proper installation. (CE Countries)

WARNING

During the warranty period, if the customer elects to use a non-original part or modifies and original part purchased from Pitco and/or its Authorized Service and Parts (ASAP) companies, the warranty will be void. In addition, Pitco and its affiliates will not be liable for any claims, damages or expenses incurred by the customer which arises directly or indirectly, in whole or in part, due to the installation or any modified part and/or received from an unauthorized service center.

WARNING

This appliance, when installed, must be electrically grounded in accordance with local codes, or in the absence of local codes, with the National Electrical Code, ANSI/NFPA 70, or the Canada Electrical Code, CSA C22.2, as applicable.

WARNING

Adequate means must be provided to LIMIT the movement of this appliance without depending on the electrical cord connection. Single appliances equipped with legs must be stabilized by installing anchor straps. All appliances equipped with casters must be stabilized by installing restraining chains.

WARNING

DO NOT alter or remove structural material on the appliance to accommodate placement under a ventilation hood.

WARNING

This appliance is intended for commercial/professional use only and should be operated by fully trained and qualified personnel. It is not intended for continuous mass production of food.

WARNING

This appliance is intended for indoor use only.

WARNING

If the power supply cord is damaged, it must be replaced by a Pitco Authorized Service and Parts (ASAP) company technician, or a similarly qualified person in order to avoid a hazard. In Europe, supply cords must be oil resistant, sheathed flexible cable not lighter than ordinary polychloroprene or other equivalent synthetic elastomer-sheathed cord. (Code designation 60245 IEC 57)

WARNING

The power supply must be disconnected before servicing, maintaining or cleaning this appliance.

WARNING

The appliance is NOT water jet stream approved. DO NOT clean the appliance with a water jet or steam cleaner.

WARNING

DO NOT attempt to move this appliance or transfer hot liquids from one container to another when the unit is at operating temperature or filled with hot liquids. Serious personal injury could result if skin comes in to contact with hot surfaces or liquids.

WARNING

DO NOT sit or stand on this appliance. The appliance's front panel, tank, splash back, tank cover, work shelf or drain board is not a step. Serious injury could result from slipping, falling or contact with hot liquids.

WARNING

NEVER use this appliance as a step for cleaning or accessing the ventilation hood. Serious injury could result from slips, trips or from contacting hot liquids.

WARNING

Potential fire danger exists if the cooking oil level is below the minimum indicated level. The cooking oil level should NOT be allowed to fall below the minimum indicated level line at any time. The use of old cooking oil can be dangerous as it will have a reduced flash point and be more prone to foaming over.

WARNING

The contents of the crumb catch and/or filter pan of any filter system must be emptied into a fireproof container at the end of each day. Some food particles can spontaneously combust if left soaking in certain types of oil or shortening.

WARNING

Completely shut the appliance down when shortening/oil is being drained from the appliance. This will prevent the appliance from heating up during the draining and filling process. Serious injury can occur.

WARNING

DO NOT operate the appliance unless all panels and access covers are attached correctly.

WARNING

It is recommended that this appliance be inspected by a qualified service technician for proper performance and operations on a yearly basis.

WARNING

This appliance is designed to be used with oils that are at a liquid state at room temperature. Use of solid shortenings and oils will cause damage to the filter system and void warranty.

WARNING

This appliance must be installed by a qualified service agent. The qualified service agent will ensure the appliance is installed according to all local and national codes.

DANGER

HIGH VOLTAGE

DISCONNECT ELECTRICAL SUPPLY BEFORE SERVICING

DANGER

HOT SURFACES

ALLOW UNIT TO COOL TO ROOM TEMPERATURE BEFORE SERVICING

DANGER

AUTOMATIC FILTERING PROCESS

THIS APPLIANCE MAY OPEN ACTUATORS OR TURN ON THE FILTER PUMP AT ANY TIME. DISCONNECT THE ELECTRICAL SUPPLY BEFORE SERVICING

DANGER

SOME TROUBLESHOOTING STEPS REQUIRE THE ELECTRICAL SUPPLY TO BE CONNECTED. USE EXTREAME CAUTION AND FOLLOW PROPER SAFETY PROCEDURES WHEN PERFORMING LIVE VOLTAGE TROUBLESHOOTING

DANGER

THIS APPLIANCE MAY HAVE MORE THAN ONE ELECTRICAL SUPPLY CONNECTION. DISCONNECT ALL ELECTRICAL SUPPLY CONNECTIONS BEFORE SERVICING

DANGER

BURN HAZARD

DO NOT MOVE THE APPLIANCE WHEN FULL OF HOT LIQUIDS

SERIAL NUMBERS

Serial numbers contain a date code that can identify the approximate date of manufacture. Below is a breakdown of serial number E18XY000000

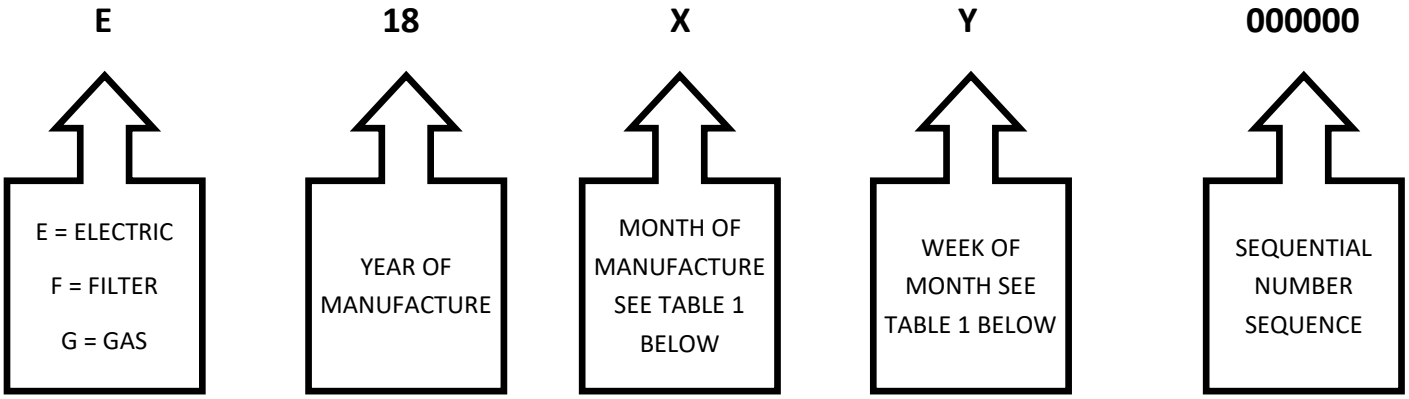

MONTH (X)		WEEK OF MONTH (Y)
JANUARY	A	1
FEBURARY	B	2
MARCH	C	3
APRIL	D	4
MAY	E	5
JUNE	F	6
JULY	G	N/A
AUGUST	H	N/A
SEPTEMBER	J	N/A
OCTOBER	K	N/A
NOVEMBER	L	N/A
DECEMBER	M	N/A

Table 1—Serial Number Guide

THEORY OF OPERATION

The Pitco SELVRF works very similarly to the Pitco standard electric fryer. However, although both types employ fixed heating elements, the SELVRF is equipped with a lift rack system that assists users by reducing the effort needed to lower and raise large amounts of food product into and out of the oil. The SELVRF fryer also comes equipped with an integral filter system and a state of the art cooking controller that allows the user to program and control cook times and temperatures for several products. Filtering and oil management functions (such as bulk oil fill and waste oil management, if so equipped) are also accomplished using the controller. Additionally, the SELVRF comes equipped with a JIB (Jug in Box) that allows a user or the auto top off system, if equipped, to replenish any oil consumed or drawn out of the tank during the cooking process through use of the controller.

The Pitco SELVRF has a reduced cold zone which significantly reduces oil usage and extends oil life. This smaller zone may require more frequent filtering depending on the product being fried.

Upon turning the fryer on, the safety (side on) contactor closes until the fryer is turned off. If the oil temperature exceeds the trip temperature of the hi-limit switch, the hi-limit switch opens and prevents further operation until the unit is safe to operate. This places a minimum duty cycle on the safety (side on) contactor to insure its proper operation when needed. The “heat demand” contactor opens and closes on demand from the primary control to maintain the desired cooking temperature. When the “heat demand” contactor closes, it energizes the heating elements in the fry pot. The temperature and hi-limit switch sensor probes can be found mounted to the heating elements. The temperature probe provides a signal to the primary control, sensing the oil temperature in the fry pot. Based on temperature feedback from the probe the controller will energize and de-energize the heating elements in response to the temperature of the oil in the tank.

TROUBLESHOOTING

ISSUE	CAUSE	STEPS TO RESOLVE ISSUE
Unit will not turn on and has no display	1. No power to the appliance 2. Power cord unplugged 3. Blown fuse(s)	1. Check circuit breaker in store to make sure it is not tripped 2. Plug in power cord 3. Replace blown fuse(s)
Unit will not heat or controller displays "HEAT FAIL"	1. Float switch in the down position 2. Tripped hi-limit switch 3. Controller turned off	1. Check that the float switch is not stuck in the down position and that there is sufficient oil level in the tank. 2. Reset the hi-limit switch 3. Turn the controller on
Display shows "PAN NOT IN PLACE"	1. Filter pan not installed 2. Filter pan not installed properly 3. Door open	1. Install the filter pan and retry 2. Remove and reinstall the filter pan properly and retry 3. Close the door and retry
Display shows "PAN NOT EMPTY"	1. Oil in filter pan 2. Debris holding filter pan float up	1. Remove the oil from the filter pan and retry 2. Remove debris from the filter pan float and retry
Display shows "CLEAR DRAIN"	1. Clogged drain 2. Drain actuator thermal limit tripped	1. Use provided clean out rod to remove clog from drain 2. Reset thermal limit on actuator
Display shows "BLOCKED DRAIN"	1. The drain tried to close and was not sensed closed by the controller	1. Remove tools and debris from drain. The drain will automatically attempt to close again after 10 seconds of the error appearing.
Display shows "CHECK FILTER"	1. Tank is not refilling from filter pan.	1. Check that the filter motor is running. 2. Filter paper may need to be changed. 3. Strainer cap need to be cleaned.
Display shows "AUTO* ERROR"	1. Door was opened while filtering 2. Filter pan was removed while filtering	1. Close the door and check that the filter pan is properly installed. 2. The automatic filter process has been canceled and the user must acknowledge the error.
Pump wont turn on	1. Pump circuit breaker tripped or in the "Off" position. 2. Motor thermal limit tripped 3. No power to filter motor	1. Turn on the circuit breaker 2. Reset the motor thermal limit 3. Plug in unit and check store circuit breaker for appliance. Also check power cord from motor is secure.
Pump runs but no oil is returning to the tank	1. Filter pan not installed properly 2. Filter paper clogged with debris 3. Strainer cap clogged with debris 4. Damaged or missing strainer cap or pickup block O-rings 5. Clog in pump suction or return lines 6. Pressure relief valve needs adjusting	1. Properly install filter pan 2. Change filter paper 3. Remove and clean strainer cap. 4. Replace O-rings 5. Remove clog 6. Adjust the pressure relief valve on the pump head

PREPAIRING TO SERVICE THE APPLIANCE

1. Turn the appliance off by pressing the power button on the controller
2. Unplug the power cord. If the appliance is hardwired, shut off and lock out the circuit breaker.
3. Remove the front panel by removing the two Phillips head screws. Allow the front panel to come down and hinge on the front spacer. Do not allow the front panel to fall as it may cause damage to the controller, relay board and wire harness. See figure 1.
4. Remove the entrance box covers located behind the door by removing the four outer Phillips head screws. See figure 2.

Figure 1

Figure 2

COMPONENT IDENTIFICATION

Figure 3

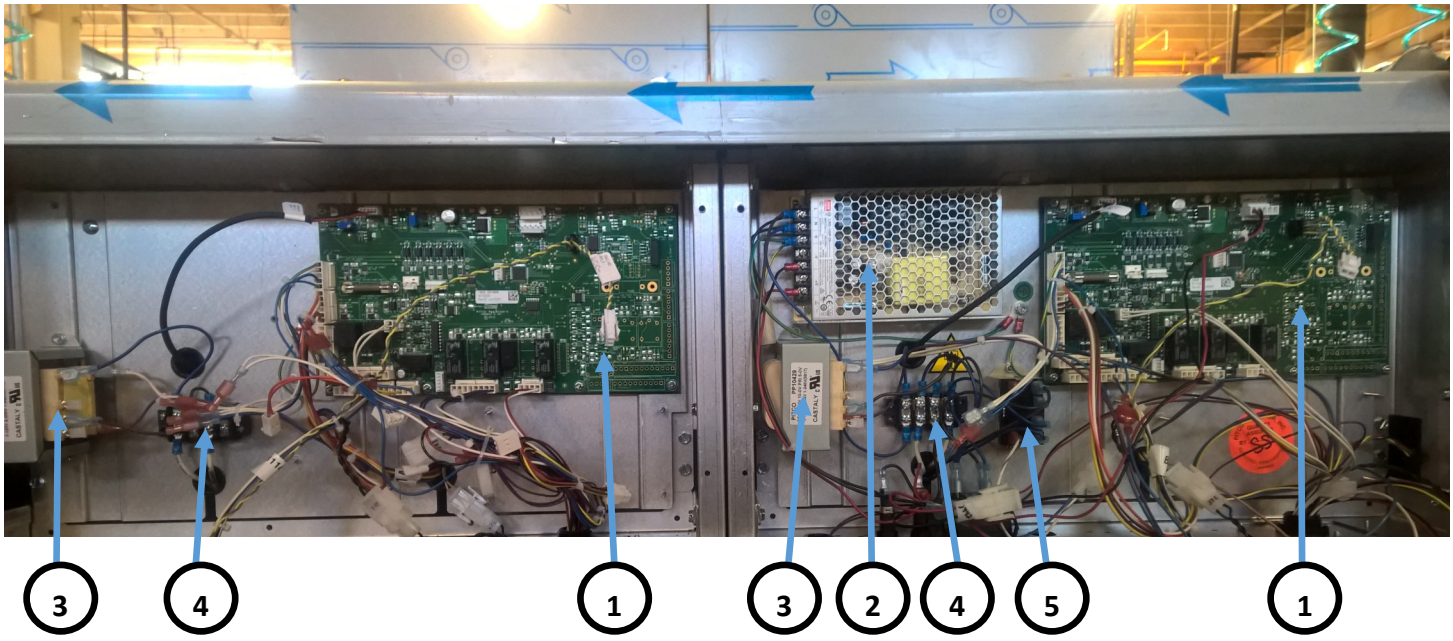

1. Auto Filter Relay Board (A4)
2. 24VDC Power Supply (A12)
3. 24VAC Transformer (T1)
4. 4 Post Barrier Terminal Block (BS3)
5. Pump Run Relay (K5)

COMPONENT IDENTIFICATION (CONTINUED)

Figure 4

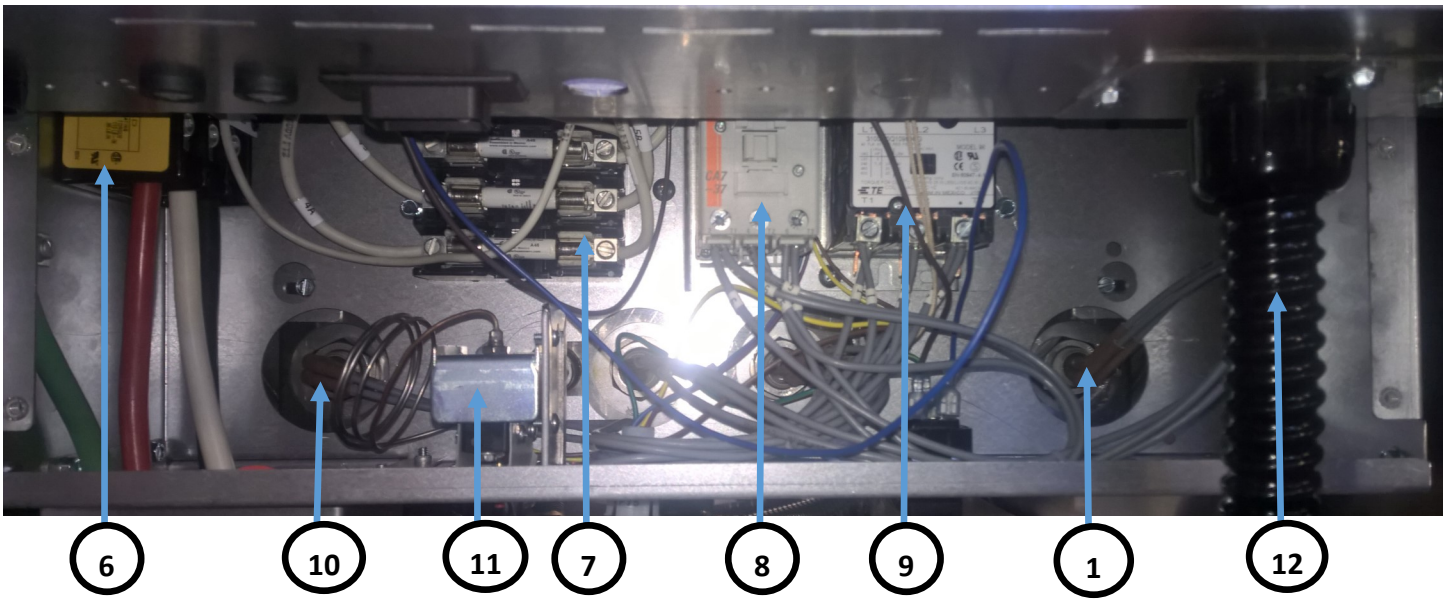

6. Main Power Terminal Block (TB1)
7. 40 Amp Fuse Quantity 6 (FB1, FB2)
8. Heat Demand Contactor (K11)
9. Safety (Side On) Contactor (K10)
10. Element (HTR1, HTR2)
11. Hi-Limit Switch (HL1)
12. Spinal Tap Conduit

Figure 5

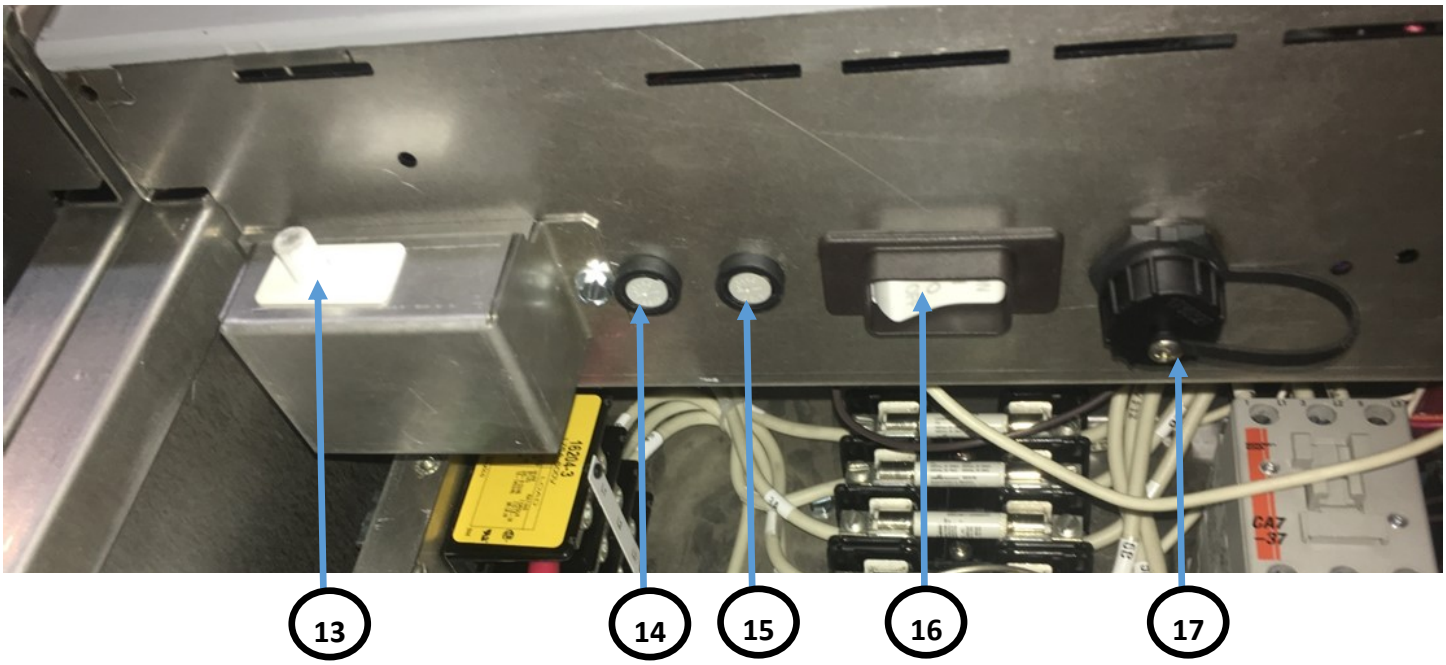

13. Door Switch*
14. AC Fuse (250V 2.5A Time Delay)* (F3)
15. DC Fuse (250V 4A Time Delay)* (F4)
16. Filter Pump Circuit Breaker* (CB1)
17. Remote USB Port

***Only found in cabinet with filter pan.**

COMPUTER DISPLAYS

- - - ENERGY SAVE - -
  - ◊ After every filter cycle, the equipment will be put into an energy savings mode. This mode will drop the set temperature to the programmed setback temperature.
  - ◊ To enter energy save mode, press and hold the thermometer key unit "- - ENERGY SAVE - -" is displayed.
  - ◊ To exit the energy save mode, press the thermometer key once and the unit will then heat to the correct set temperature for cooking products.
- QUICK FILTER
  - ◊ Quick filter is when the unit will drain the oil into the filter pan and then fill the tank. This process usually takes less than two minutes.
- DAILY FILTER
  - ◊ This is the end of day filter. It is the same process as the quick filter except the oil will run through the filter paper for a longer time for a more thorough cleaning process.
- PAN NOT IN PLACE
  - ◊ This indicates that the filter pan in not installed or not installed properly. This message will also display if the front door is open. Make sure the filter pan is installed properly and the front door is closed before trying to filter again.
- PAN NOT EMPTY
  - ◊ The filter pan may still have oil in it or there is debris holding the filter pan float in a raised position. Remove the oil and/or debris before trying to filter again.
- CLEAR DRAIN
  - ◊ The filter pan has not properly sensed oil draining into it from the fry pot during a filter cycle. If the drain is open and no oil is entering the filter pan, use the provided drain tool to clear the drain. Once the oil drains into the filter pan, the filter process will automatically restart.
- CHECK FILTER
  - ◊ The oil is returned to the fry tank from the filter pan to finish the filter cycle. If the filter pan is not sensed empty within a predetermined time, the system assumes there is a pump issue.
    - ∗ Check to make sure the pre-filter screen is free of any debris and is screwed in and tight. Finger tight is ok. Also check that the white O-ring is in place on the pre-filter screen.
    - ∗ Check the white On/Off switch behind the door towards the top of the cabinet is in the On position. This is the circuit breaker for the pump motor.
- AUTO ERROR
  - ◊ The filter pan was sensed as not in place or the door was opened during a running filter cycle. This error will shut down all operation and the operator must intervene to finish the filter cycle.
    - ∗ Check to make sure the filter pan did not get pulled out from the fryer while the fryer was in a filter mode. Replace the filter pan or push the filter pan back in place.
    - ∗ Verify the door is properly latched.
    - ∗ Once the filter pan has been put back into the proper position and the door closed, you will need to manually return the oil to the fry pot using the computer interface.
      - Press and hold the middle filter button until the display shows "FRYER CONTROL"
      - Press the "L" key.
      - Press the "6" key to turn on the filter pump.
      - Once the oil is returned, press the "6" key again to turn the filter pump off.
      - Turn the fryer off and back on. The unit is now ready for use.

COMPUTER DISPLAYS

- CLEAR BLOCKED DRAIN - RETRY? Y OR N
  - ◊ During the filter cycle, the system automatically closes the drain. If there is debris or tools in the drain when it attempts to close it, the drain will not close correctly and give you this message.
    - ∗ Remove any debris or tools from the drain and press the "6" key to try closing the drain again.
    - ∗ If all debris and tools have been removed, the drain will close and the filter process will continue.
    - ∗ You have three attempts to retry closing the drain. After the third failed attempt at closing the drain, the fryer will shut down and will display "OFFLINE -- CALL FOR SERVICE ERR 2002". Do not power cycle the fryer at this time as repeated attempts to close the drain may cause damage if the debris is not properly cleared. The drain manifold should be dismantled to clear any clogs. If the tank needs to be drained to remove the clog, an alternate draining method must be used.
- OFFLINE -- CALL FOR SERVICE ERR 2002
  - ◊ The drain attempted to close three times and never was sensed closed. Service will need to be scheduled. Do not power cycle the fryer at this time as repeated attempts to close the drain may cause damage if the debris is not properly cleared.
- FILTER LOCK or FILTER NOW
  - ◊ The fryer must be filtered before any further cook timers can be started.
- LOW JIB
  - ◊ JIB stands for Jug In Box and is referring to the container of oil in the cabinet of the fryer.
    - ∗ If you have a single fryer, the JIB is the metal slide out box that must be manually filled with oil.
    - ∗ If you have a dual fryer, the JIB is the plastic jug of fresh oil located in the left-hand fryer cabinet.
  - ◊ This message indicates the JIB is getting low on oil and will need to be refilled/changed soon.
- JIB EMPTY
  - ◊ JIB is empty and needs to be filled/changed.
  - ◊ To reset the error, fill or change the JIB and then press and hold the clock key on the controller until RESET JIB? Y OR N is displayed and then press the "6" key for yes.
- CHECK JIB
  - ◊ The fryer is trying to take fresh oil from the JIB but it is not able to.
    - ∗ Refill or replace the JIB and then reset the JIB timer.
    - ∗ Make sure the pump circuit breaker is in the "ON" position.
- HEAT FAIL
  - ◊ This is usually due to a tripped hi limit or low oil level causing the liquid float switch to open.
    - ∗ Turn the fryer off. Press the reset button for the hi limit switch, located next to the remote USB port.
    - ∗ Verify proper oil level in the tank and the turn the unit back on to see if normal operation returns.
    - ∗ If normal operation did not return, check troubleshooting steps for the relay board heat circuit.
- OPEN PROBE
  - ◊ Temperature probe is not being sensed by the controller.
    - ∗ Refer to temperature probe troubleshooting in this manual.
- SYSTEM FAILURE
  - ◊ A short to ground on the temperature probe circuit has been detected. Check the probe circuit and the temperature probe for shorts to ground using a multimeter.
- HIGH TMP
  - ◊ The controller is detecting the oil temperature has reached 40°F (22°C) above set point or 410°F (210°C),
- DRAINING TURN OFF
  - ◊ Drain is not sensed closed when the unit is turned on. Refer to drain actuator troubleshooting in this manual.
- COMMLINK FAILURE
  - ◊ A communication failure has occurred between the controller and relay board. Power cycle the unit.

COMPONENT TROUBLESHOOTING

Temperature Probe:

To check the temperature probe resistance reading:

1. Turn the appliance off. Disconnect the electrical supply.
2. Open the front panel to gain access to the temperature probe connection.
3. Disconnect the temperature probe from the computer wire harness.
4. Using a multimeter that can read up to a minimum of 200K ohm, check the resistance of the temperature probe and record the reading. If the reading is “O.L.” or “OPEN”, the temperature probe has failed and would need to be replaced.
5. Check each probe lead to the frame of the appliance. A reading of “O.L.” or “OPEN” should display. Any resistance reading to the frame would indicate a short to ground and the probe would need to be replaced.
6. Check the current oil temperature inside the tank, approximately one inch above the end of the temperature probe inside the tank. Record the temperature reading.
7. Using the temperature probe chart on page 19, compare the resistance reading to the temperature of the oil. The temperature listed on the chart for the resistance should be within 5°F/2.8°C of the actual oil temperature.
8. Reconnect the temperature probe to the controller wire harness and reassemble the front panel.
9. Reconnect the electrical supply. Verify operation.

Oil Level Probe:

To check the oil level probe:

1. Turn the appliance off. Disconnect the electrical supply.
2. Open the front panel to view the relay board.
3. Locate the oil level probe wire connection on the relay board. It is located in the upper left of the relay board and is labeled J502. Unplug the oil level probe.
4. Using a multimeter set to ohms, check the resistance between the two red wires. An acceptable reading is 150Ω +/- 10%.
5. Now check the resistance between the two black wires. The acceptable reading is 100Ω - 200Ω.
6. Next check each red to each black and check each wire to ground. The acceptable reading is “O.L.” or “OPEN”.
7. Reconnect the oil level probe and reassemble the front panel.
8. Reconnect the electrical supply. Check operation of the appliance.

To replace the oil level probe:

1. Lower the front panel. Then remove the five screws securing the component panel to the frame of the unit. Two screws are in the lower left, two screws are in the lower right and the last screw is at the top center of the panel.
2. Remove the component panel. Make note of wire connections of any wire you need to remove to complete this.
3. Remove the oil level probe access cover by removing the two screws. One screw is above the fuse block. The other screw is above the safety (side on) contactor. The oil level probe should now be visible.
4. Unscrew the oil level probe from the tank. Install the new oil level probe in reverse, using food grade thread sealant on the male threads of the oil level probe.

24VAC Transformer

To check the transformer:

1. Turn the appliance off. Disconnect the electrical supply.
2. Open the front panel and locate the transformer.
3. Note all wire connections and then disconnect the wires from the transformer.
4. Using a multimeter set to ohms, check pin 6 to pin 10 for resistance. Acceptable reading is 0.4Ω - 0.6Ω.
5. **For 208VAC Units,** check pin 2 to pin 5 for resistance. Acceptable reading is 21Ω to 22Ω.
6. **For 240VAC Units,** check pin 1 to pin 5 for resistance. Acceptable reading is 25Ω to 26Ω.
7. Reconnect the wiring to the transformer. Then reconnect the electrical supply.
8. Verify on the relay board that 24VAC - 28VAC is present at J135 between the blue wire and white wire.
9. Reassemble the front panel and verify operation of the appliance.

COMPONENT TROUBLESHOOTING (CONTINUED)

DC Power Supply:

The DC power supply has a built in overload protection circuit. If a short or over amp condition is detected, the DC power supply will stop outputting DC power until the short or over amp condition is resolved. To verify operation of the DC power supply:

1. Turn the appliance off. Verify the AC and DC fuses are good.
2. Open the front panel and locate the DC power supply. On dual units, this is located on the right side unit.
3. Check the output of the controller for DC voltage with a multimeter set to DC. Acceptable reading is 23.5VDC-24.5VDC.

Element (HTR1, HTR2 on Schematic):

To check the operation of each section of the element:

1. Turn the controller off. Disconnect the electrical supply.
2. Open the door and remove the entrance box covers.
3. Note the location of the element wires on the contactors and then remove the element wires from the contactors.
4. Using a multimeter set to ohms, check the following wires for resistance on each element. Acceptable reading is 14Ω - 15Ω.
    a. Wire 1 to wire 4
    b. Wire 2 to wire 5
    c. Wire 3 to wire 6
5. Reconnect the element wires to the contactors.
6. Reconnect the electrical supply. Turn the appliance on and allow to start heating.
7. Using a clamp meter, check the amp draw on each leg of the incoming power. Each leg should read close to the amp rating on the rating plate attached to the door.
8. Turn the appliance off and disconnect the electrical supply.
9. Reassemble the entrance box covers. Reconnect the electrical supply and verify operation.

Safety (Side On) Contactor (K10 on Schematic):

To check the operation of the safety (side on) contactor:

1. Turn the controller off. Disconnect the electrical supply.
2. Open the door and remove the entrance box covers.
3. Note the location of the contactor coil wires and the remove the wires from the contactor coil.
4. Using a multimeter set to ohms, check the resistance between the contactor coil contacts. Acceptable reading is 6Ω-7Ω.
5. Reconnect the contactor coil wires. Then reconnect the electrical supply.
6. Turn the controller on and check for voltage across the contactor coil contacts. A steady 24VAC - 28VAC should be present and the contactor should be pulled in.
7. Turn the controller off and disconnect the electrical supply.
8. Reassemble the entrance box covers. Reconnect the electrical supply and verify operation.

Cycling (Heat Demand) Contactor (K11 on Schematic):

To check the operation of the cycling (heat demand) contactor:

1. Turn the controller off. Disconnect the electrical supply.
2. Open the door and remove the entrance box covers.
3. Note the location of the contactor coil wires and the remove the wires from the contactor coil.
4. Using a multimeter set to ohms, check the resistance between the contactor coil contacts. Acceptable reading is 3Ω-4Ω.
5. Reconnect the contactor coil wires. Then reconnect the electrical supply.
6. Turn the controller on and check for voltage across the contactor coil contacts. A steady 24VAC - 28VAC should be present and the contactor should be pulled in when the controller is calling for heat.
7. Turn the controller off and disconnect the electrical supply.
8. Reassemble the entrance box covers. Reconnect the electrical supply and verify operation.

COMPONENT TROUBLESHOOTING (CONTINUED)

When changing actuators, make sure the valve is in a closed position before installing the new actuator. All replacement actuators are shipped in a closed position.

Return/Divert/Waste/Smart Oil Sensor Actuators:

To check the operation of the return, divert, waste oil or smart oil sensor actuator:

1. Turn the controller off.
2. Open the door and locate the actuator you want to troubleshoot.
3. Follow the cord from the actuator to the control box mounted on the right side of the appliance.
4. Using a multimeter set to DC voltage, insert your meter's positive wire lead into the red wire connection and negative wire lead into the black wire connection.
5. Any time the actuator valve is closed or is closing, the actuator will receive **positive 24VDC.**
6. Any time the actuator valve is open or is opening, the actuator will receive **negative 24VDC.**
7. If the actuator is not moving when the polarity switches, the actuator has failed.
8. If the polarity does not change when it should, you may have a failed relay board. Refer to relay board filter circuits troubleshooting on the next page.

Drain Actuator:

To check the operation of the drain actuator: **DRAIN THE TANK OF ALL LIQUIDS OR MAKE SURE THE FILTER PAN IS IN PLACE AND EMPTY BEFORE TESTING THE DRAIN VALVE**

1. Turn the controller off.
2. Open the door and locate the drain actuator on the underside of the drain valve.
3. Follow the cord from the actuator to the control box mounted on the right side of the appliance.
4. Using a multimeter set to DC voltage, insert your meter's positive wire lead into the red wire connection and negative wire lead into the black wire connection.
5. Any time the actuator valve is closed or is closing, the actuator will receive a **positive 24VDC.**
6. On the controller, press and hold the filter key until "FRYER CONTROL" is displayed. Then press the "1" key and "DRAIN TOGL OPN" will be displayed. At this point, pressing the "6" key will turn on the drain relay and open the drain valve. The meter display will change to **negative** 24VDC. Press the "6" key again to turn off the drain actuator relay and close the drain valve.
7. If the actuator is not moving when the polarity switches, press the white reset button on the right side of the actuator. If the actuator still will not move, the actuator has failed.
8. If the polarity does not change when you press the "6" key, you may have a failed relay board. Refer to relay board filter circuits troubleshooting on the next page.
9. Additionally you need to check signal output from the actuator to indicate if the internal switch is functioning. To test the internal switch:
    a. When the actuator is closed, use a multimeter set to continuity and check blue to white for a **closed** circuit.
    b. When the actuator is open, use a multimeter set to continuity and check blue to white for a **open** circuit.

Hi Limit:

The hi limit is a normally closed switch designed to open at 450°F (232°C) +/- 15°F (+/- 8.3°C). If the hi limit is opening prematurely, verify the hi-limit switch sensing bulb and capillary tube inside the vat is not touching the elements. No more than 6" of capillary tube should be inside the tank.

To verify the hi-limit switch is closed, shut off the appliance, remove the hi-limit switch from its bracket, remove the two wires from the hi-limit switch and use a multimeter to check for continuity through the hi-limit switch.

COMPONENT TROUBLESHOOTING (CONTINUED)

1. **Auto Filter Board Heat Circuit: Refer to Figure 6. Verify the auto filter board has DC voltage by checking for the flashing green led (LED7). If the LED is not flashing, then no DC power is present.**

To check the heat circuit of the auto filter board (Lower left corner):

1. Verify the Left AC Power LED is lit, located just above the fuse. If the AC LED is not lit, verify 24VAC - 28VAC at J1, blue wire to white wire. This voltage comes straight from the transformer. If no voltage, troubleshoot the transformer. If voltage is present, verify the fuse is good.
2. On J136, verify that either a jumper is installed, or if two white wire, unplug J136 and check the white wires for continuity. If no continuity on the white wires, check the float switch operation. Also ensure jumpers are installed on J129 and J18.
3. Turn the controller on. Verify 24VAC - 28VAC on J32, yellow wire to white wire. If present, continue to step 4.
    a. If no voltage is present, verify that the LEFT SIDE ON LED is lit.
        I. If lit, the relay board is bad and needs to be replaced.
        II. If the LEFT SIDE ON LED is not lit, check that the jumper is installed properly on J18 and that the float switch is in the closed (up) position. You can verify this by following step 2 above.
        III. If the LEFT SIDE ON LED is still not lit, either the Auto Filter Board, Controller or Commlink cable has failed. No electrical testing exists for this failure. Swap one component at a time with a known working component to determine the failure.
4. Check the J32 connector from brown/white wire to white wire for 24VAC - 28VAC. If present, the safety (side on) contactor should be closed. Continue to step 5.
    a. If no voltage is present, try to reset the hi limit.
    b. If no voltage is present after resetting the hi limit, either the hi limit has failed or a wire connection issue is present.
5. With the controller calling for heat (LED next to thermometer on controller is lit), verify 24VAC - 28VAC on J32, red wire to white wire. If voltage is present, the cycling (heat demand) contactor should be closed. The heat circuit is complete and the elements should be energized.
    a. If no voltage is present, verify the LEFT HEAT DEMAND LED is lit on the auto filter board. If the LED is lit, the relay has failed and the auto filter board must be replaced.
    b. If the LEFT HEAT DEMAND LED is not lit, either the Auto Filter Board, Controller or Commlink cable has failed. No electrical testing exists for this failure. Swap one component at a time with a known working component to determine the failure.

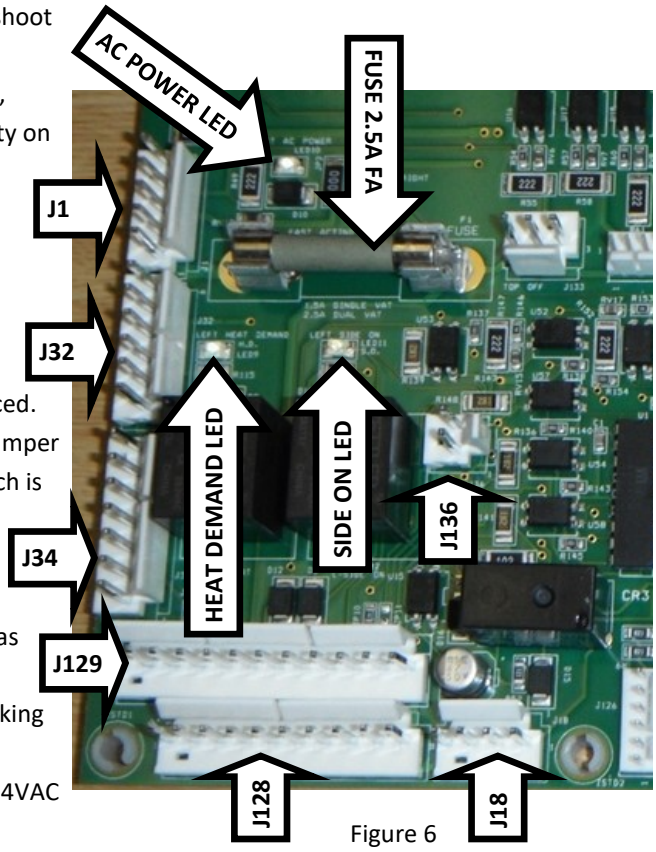

Figure 6

COMPONENT TROUBLESHOOTING (CONTINUED)

Auto Filter Board Filter Circuits: Refer to Figure 7. Verify the auto filter board has DC voltage by checking for the flashing green led (LED7). If the LED is not flashing, then no DC power is present.

- Pump Run Relay (Relay board above filter pump only):
  1. To test the operation of the pump run relay, you need to perform a resistance check as this relay receives power input from the connector rather than the auto filter board.
     a. Remove the J127 connector.
     b. On the controller, press and hold the filter key until "FRYER CONTROL" is displayed. Then press the "L" key and "RETURN TOGL OPN" will be displayed. At this point, pressing the "6" key will turn the pump run relay on and pressing the "6" key again will turn the pump run relay off.
     c. Using a multimeter set to ohms, ohm out pin one and two on J127 directly on the relay board. With the LED above the relay off, the multimeter will display "O.L." or "OPEN".
     d. Press the "6" key on the controller to activate the pump run relay and turn on the LED above the relay. The multimeter should display 0.5Ω or less.
     e. Turn the controller off and then plug in J127 when finished testing the relay.
- Divert Actuator Relay (Relay board above filter pump only):
  1. To test the operation of the Divert Actuator Relay, turn off the filter motor circuit breaker then locate J127. With a multimeter set to DC Volts, place the meter's positive lead in the white wire connector and the negative lead in the yellow wire connector.
  2. With the LED above the divert actuator relay off, the meter should display a **positive** 24VDC.
  3. On the controller, press and hold the filter key until "FRYER CONTROL" is displayed. Then press the "2" key and "TOP-OFF HOLD ON" will be displayed. At this point, pressing and holding the "6" key will turn on the divert actuator relay, return relay and pump run relay. The meter display will change to **negative** 24VDC. Release the "6" key to turn off the pump run relay, close the return valve and place the divert actuator back into the home position. Turn on the filter motor circuit breaker.
- Return Actuator Relay:
  1. To test the operation of the Return Actuator Relay, turn off the filter motor circuit breaker then locate J127. With a multimeter set to DC Volts, place the meter's positive lead in the light blue wire connector and the negative lead in the brown wire connector.
  2. With the LED above the return actuator relay off, the meter should display a **positive** 24VDC.
  3. On the controller, press and hold the filter key until "FRYER CONTROL" is displayed. Then press the "L" key and "RETURN TOGL OPN" will be displayed. At this point, pressing the "6" key will turn on the return relay and pump run relay. The meter display will change to **negative** 24VDC. Release the "6" key to turn off the pump run relay and close the return valve.
- Drain Valve Relay: **DRAIN THE TANK OF ALL LIQUIDS OR MAKE SURE THE FILTER PAN IS IN PLACE AND EMPTY BEFORE TESTING THE DRAIN VALVE**
  1. To test the operation of the Drain Actuator Relay, locate J138. With a multimeter set to DC Volts, place the meter's positive lead in the red wire connector and the negative lead in the black wire connector.
  2. With the LED above the drain actuator relay off, the meter should display a **positive** 24VDC.
  3. On the controller, press and hold the filter key until "FRYER CONTROL" is displayed. Then press the "1" key and "DRAIN TOGL OPN" will be displayed. At this point, pressing the "6" key will turn on the drain relay and open the drain valve. The meter display will change to **negative** 24VDC. Press the "6" key again to turn off the drain actuator relay and close the drain valve.

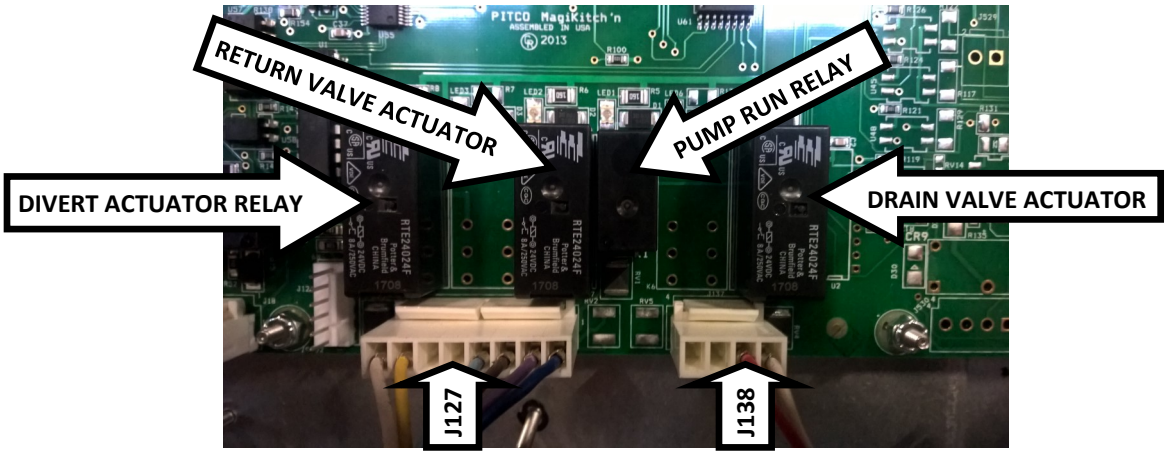

Figure 7

COMPONENT TROUBLESHOOTING (CONTINUED)

Auto Filter Board Flash Codes:

The auto filter board has two status lights, one for filtering status and one for the oil level probe status. Both can be found near the center of the auto filter board. If these LED's are not lit, this would be an indication that no DC power is present.

- Filter Status Light (Green, LED7)
    1. Also called the "heartbeat", this LED indicates the status of the actuator relays.
    2. If this LED is not illuminated then there is no DC power to the auto filter board.
    3. All fryers in the fryer bank should be flashing the same code.
    4. Table 2 shows the different flash codes and their meaning.

Code	Description
1 Flash	Draining
2 Flash	Filtering
4 Flash	Top Off
6 Flash	Disposing
8 Flash	Idle

Table 2 - Status LED Flash Codes

- Oil Level Probe Status Light (Red, LED22)
    1. Indicates the status of the oil level probe.
    2. This is a two digit code. The first digit is a slow flash. The second digit is a quick flash. If the LED is only flashing 1 flash, the oil level probe function is disabled.
    3. The code may change at each auto filter board.
    4. Table 3 shows the different flash codes and their meaning.
    5. If a 2/5 flash code is displayed, follow the troubleshooting steps in this document for checking the resistance of the oil level probe. An issue exists with either the oil level probe or the auto filter board.

Slow/Fast Flash	Description
1 Flash	Disabled
1/2 Flash	CommLink Failure
2/2 Flash	Detecting Oil
2/3 Flash	Detecting Oil, Recent Top Off
2/4 Flash	Idle
2/5 Flash	Oil Level Probe Fault

Table 3 - Oil Level Probe Status LED Flash Codes

COMPONENT TROUBLESHOOTING (CONTINUED)

Filter Pump:

- Adjusting the pressure relief valve on the pump head (Check if there is no suction from the filter pump)
    1. Turn the appliance off and allow to cool to room temperature.
    2. Remove the rear access panel by removing the four screws.
    3. Remove the acorn nut from the pressure relief adjustment screw. Make sure not to lose the seal under the acorn nut.
    4. Loosen the retaining nut on the pressure relief adjustment screw. Do not remove the nut.
    5. Using a flat head screw driver, rotate the pressure relief adjustment screw clockwise until it stops. This is the highest pressure setting.
    6. Remove any paint chips that are on the threads of the pressure relief screw. Then tighten the retaining nut and then reinstall the acorn nut, making sure the gasket is in place between the acorn nut and retaining nut. Then reinstall the rear access cover.
    7. Place the unit back into its location and reconnect the electrical supply.
    8. Turn the unit on and allow to heat. Once heated, perform a quick filter by pressing the filter button on the controller and then press number 6 for yes. The unit will automatically filter from this point.

- Removing the pump head.
    1. Disconnect electrical supply.
    2. Remove the rear access panel.
    3. Loosen the unions on either side of the pump head. Some oil may come out of the lines when loosening the unions.
    4. Remove the two bolts on the left side of the pump and the two bolts on the right side of the pump. The bolts at the top of the pump head and the bottom center of the pump head are used to disassemble the pump head once removed from the unit.
    5. Pull the pump off the motor, using caution not to damage the gasket between the pump and motor.
    6. Follow the above steps in reverse to reinstall the filter pump head.

- Filter motor not turning on.
    1. Verify the filter pump circuit breaker is in the “ON” position and check that the filter motor power cord is plugged in. Press the thermal overload reset on the filter motor.
    2. Check proper operation of the pump run relay. See previous page for troubleshooting.
    3. Check the pump relay (component number 5 on page 8) for coil voltage. When the pump run relay on the auto filter board closes, the pump relay receives 24VAC and closes. Verify the relay is closing and is sending supply voltage to the filter motor.
    4. If supply voltage is going to the filter motor and still does not turn on, replace the filter motor.

Pan In Place/Pan Not Empty Switches

1. Remove the front panel. Locate J132 and disconnect.
2. Using a multimeter set to ohms, check the pan in place switch (blue wire and brown wire) for resistance. With the filter pan installed and the door closed, a reading of 0.5Ω or less is expected. With the filter pan removed or the door open, a reading of “O.L.” or “OPEN” is expected.
    a. Test the pan in place switch with the filter pan installed and the door open and also with the filter pan removed and the door closed.
3. Using a multimeter set to ohms, check the pan not empty switch (violet wire and black wire) for resistance. With the filter pan empty/filter pan float in the down position, a reading of 0.5Ω or less is expected. With oil in the pan/float in the up position, a reading of “O.L.” or “OPEN” is expected.
4. These switches can also be checked directly by removing the access cover just above the filter pan in the rear of the unit. The door switch (used in the pan in place circuit) can be tested by removing the two screws securing the bracket to the frame of the unit.

PROBE RESISTANCE CHART

Probe Resistance in 5°F Increments.								
Probe Temp (°F)	Probe Temp (°C)	Resistance (Ohms)	Probe Temp (°F)	Probe Temp (°C)	Resistance (Ohms)	Probe Temp (°F)	Probe Temp (°C)	Resistance (Ohms)
10	-12.2	562734	175	79.4	11719	340	171.1	1058.23
15	-9.4	483875	180	82.2	10716	345	173.9	998.09
20	-6.7	417167	185	85.0	9812	350	176.7	942.00
25	-3.9	360589	190	87.8	8995	355	179.4	889.67
30	-1.1	312474	195	90.6	8255	360	182.2	840.78
35	1.7	271446	200	93.3	7586	365	185.0	795.10
40	4.4	236370	205	96.1	6979	370	187.8	752.38
45	7.2	206311	210	98.9	6427	375	190.6	712.41
50	10.0	180491	215	101.7	5926	380	193.3	674.95
55	12.8	158252	220	104.4	5470	385	196.1	639.87
60	15.6	139055	225	107.2	5055	390	198.9	606.96
65	18.3	122489	230	110.0	4675	395	201.7	576.09
70	21.1	108051	235	112.8	4329	400	204.4	547.09
75	23.9	95539	240	115.6	4013	405	207.2	519.86
80	26.7	84644	245	118.3	3723	410	210.0	494.24
85	29.4	75136	250	121.1	3458	415	212.8	470.16
90	32.2	66823	255	123.9	3214	420	215.6	447.49
95	35.0	59540	260	126.7	2991	425	218.3	426.13
100	37.8	53146	265	129.4	2785	430	221.1	406.02
105	40.6	47523	270	132.2	2597	435	223.9	387.04
110	43.3	42569	275	135.0	2422	440	226.7	369.14
115	46.1	38195	280	137.8	2262	445	229.4	352.24
120	48.9	34328	285	140.6	2113.9	450	232.2	336.29
125	51.7	30902	290	143.3	1977.3	455	235.0	321.21
130	54.4	27862	295	146.1	1851.0	460	237.8	306.94
135	57.2	25161	300	148.9	1734.3	465	240.6	293.46
140	60.0	22755	305	151.7	1626.1	470	243.3	280.69
145	62.8	20610	310	154.4	1525.9	475	246.1	268.61
150	65.6	18695	315	157.2	1433.0	480	248.9	257.15
155	68.3	16981	320	160.0	1346.7	485	251.7	246.30
160	71.1	15446	325	162.8	1266.6	490	254.4	236.00
165	73.9	14069	330	165.6	1192.1	495	257.2	226.24
170	76.7	12823	335	168.3	1122.8	500	260.0	216.96

NOTE: **Resistance, of either probe lead, to the frame of the appliance should read as "open' on the meter. Typically this is 1Meg ohms or more.**
°C = 5/9 (°F-32)
°F = (9/5 * °C) +32

SCHEMATICS

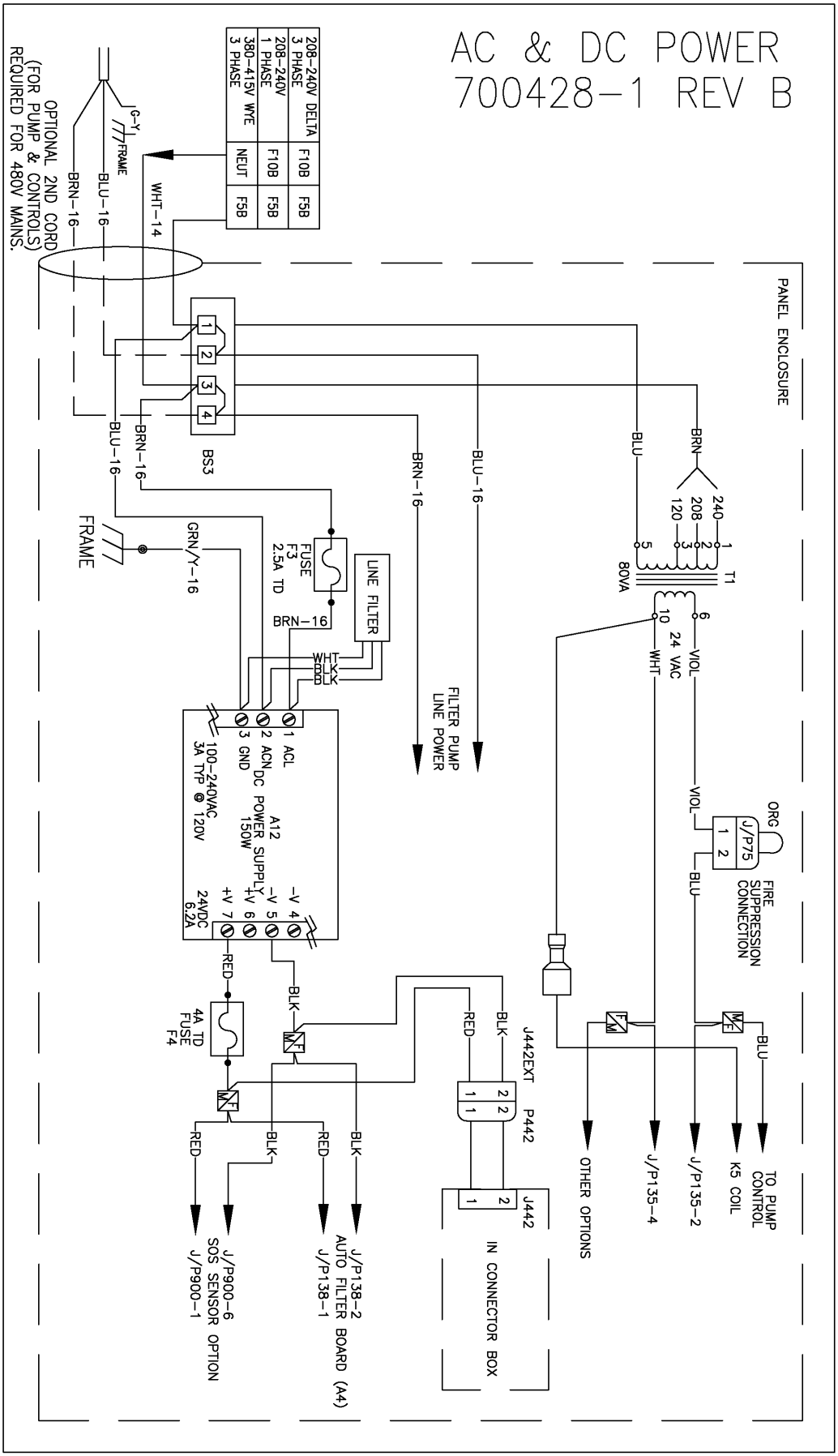
AC & DC POWER
700428-1 REV B
208-240V DELTA 3 PHASE
208-240V 1 PHASE
380-415V WYE 3 PHASE
F10B
F5B
NEUT
OPTIONAL 2ND CORD (FOR PUMP & CONTROLS) REQUIRED FOR 480V MAINS.
G-Y
FRAME
BRN-16
BLU-16
WHT-14
PANEL ENCLOSURE
BS3
BLU
BRN
240
208
120
T1
80VA
FUSE F3 2.5A TD
LINE FILTER
GRN/Y-16
WHT
BLK
FILTER PUMP LINE POWER
24 VAC
VIOL
ORG
J/P75
FIRE SUPPRESSION CONNECTION
1 ACL
2 ACN
3 GND
DC POWER SUPPLY 150W
A12
100-240VAC 3A TYP @ 120V
24VDC 6.2A
-V 4
-V 5
+V 6
+V 7
RED
4A TD FUSE F4
J442EXT
P442
J442
IN CONNECTOR BOX
OTHER OPTIONS
J/P135-4
J/P135-2
K5 COIL
TO PUMP CONTROL
J/P138-2 AUTO FILTER BOARD (A4)
J/P138-1
J/P900-6 SOS SENSOR OPTION
J/P900-1

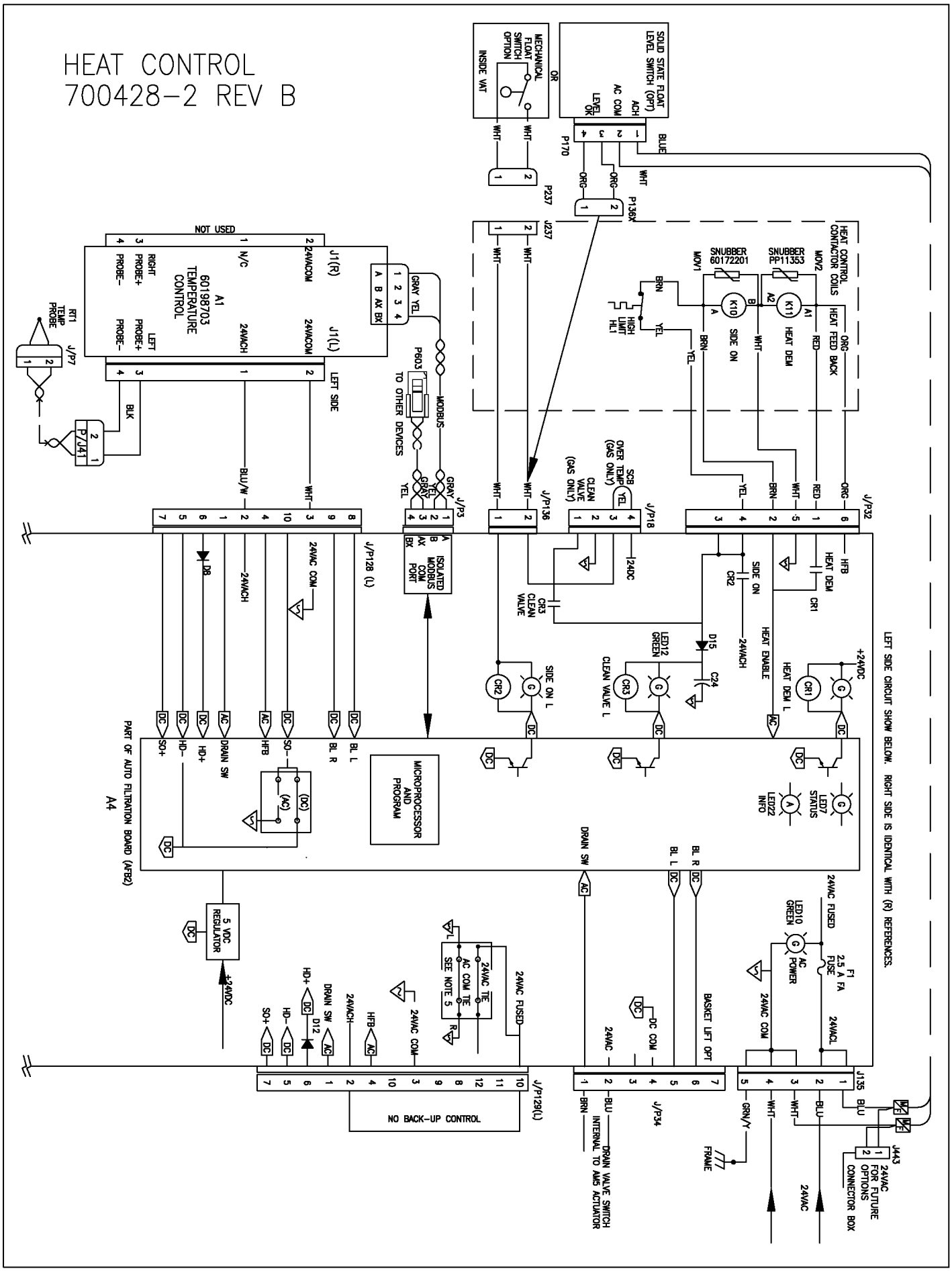
HEAT CONTROL
700428-2 REV B
MECHANICAL FLOAT SWITCH OPTION
INSIDE VAT
SOLID STATE FLOAT LEVEL SWITCH (OPT)
ACH
AC COM
LEVEL OK
P170
P237
P136X
J237
HEAT CONTROL CONTACTOR COILS
SNUBBER 60172201
SNUBBER PP11353
MOV1
MOV2
HIGH LIMIT HL1
SIDE ON
HEAT DEM
HEAT FEED BACK
NOT USED
A1 60198703 TEMPERATURE CONTROL
J1(R)
J1(L)
RIGHT PROBE+
RIGHT PROBE-
LEFT PROBE+
LEFT PROBE-
24VACOM
24VACH
LEFT SIDE
RT1 TEMP PROBE
J/P7
P/J41
P603
TO OTHER DEVICES
MODBUS
J/P3
J/P136
J/P18
J/P32
SCB OVER TEMP (GAS ONLY)
CLEAN VALVE (GAS ONLY)
J/P128 (L)
ISOLATED MODBUS COM PORT
24VAC COM
CR3 CLEAN VALVE
CR2
CR1
HEAT DEM
HEAT ENABLE
LED12 GREEN
D15
C24
SIDE ON L
CLEAN VALVE L
HEAT DEM L
+24VDC
LEFT SIDE CIRCUIT SHOW BELOW. RIGHT SIDE IS IDENTICAL WITH (R) REFERENCES.
PART OF AUTO FILTRATION BOARD (AFB2)
A4
MICROPROCESSOR AND PROGRAM
LED7 STATUS
LED22 INFO
DRAIN SW
5 VDC REGULATOR
24VAC FUSED
LED10 GREEN
AC POWER
F1 2.5 A FA FUSE
24VAC TIE
AC COM TIE
SEE NOTE 5
BASKET LIFT OPT
DC COM
24VAC
24VACL
J/P129(L)
NO BACK-UP CONTROL
J/P34
DRAIN VALVE SWITCH INTERNAL TO AM5 ACTUATOR
J135
FRAME
J443
24VAC FOR FUTURE OPTIONS CONNECTOR BOX

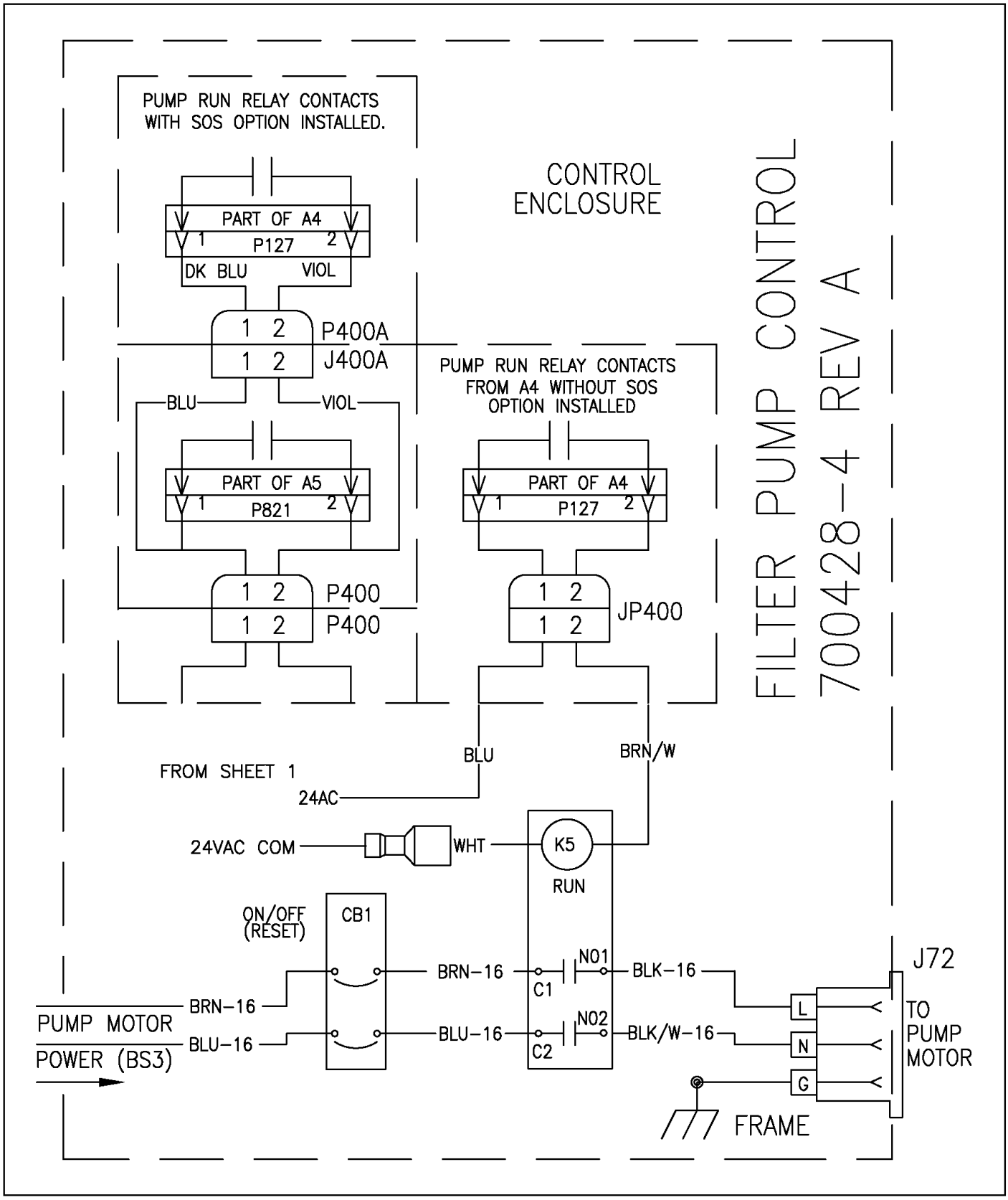
PUMP RUN RELAY CONTACTS
WITH SOS OPTION INSTALLED.
CONTROL
ENCLOSURE
FILTER PUMP CONTROL
700428-4 REV A
PART OF A4
P127
DK BLU
VIOL
P400A
J400A
BLU
VIOL
PUMP RUN RELAY CONTACTS
FROM A4 WITHOUT SOS
OPTION INSTALLED
PART OF A5
P821
PART OF A4
P127
P400
P400
JP400
BLU
BRN/W
FROM SHEET 1
24AC
24VAC COM
WHT
K5
RUN
ON/OFF
(RESET)
CB1
BRN-16
BLU-16
BRN-16
BLU-16
N01
N02
C1
C2
BLK-16
BLK/W-16
J72
TO
PUMP
MOTOR
L
N
G
PUMP MOTOR
POWER (BS3)
FRAME

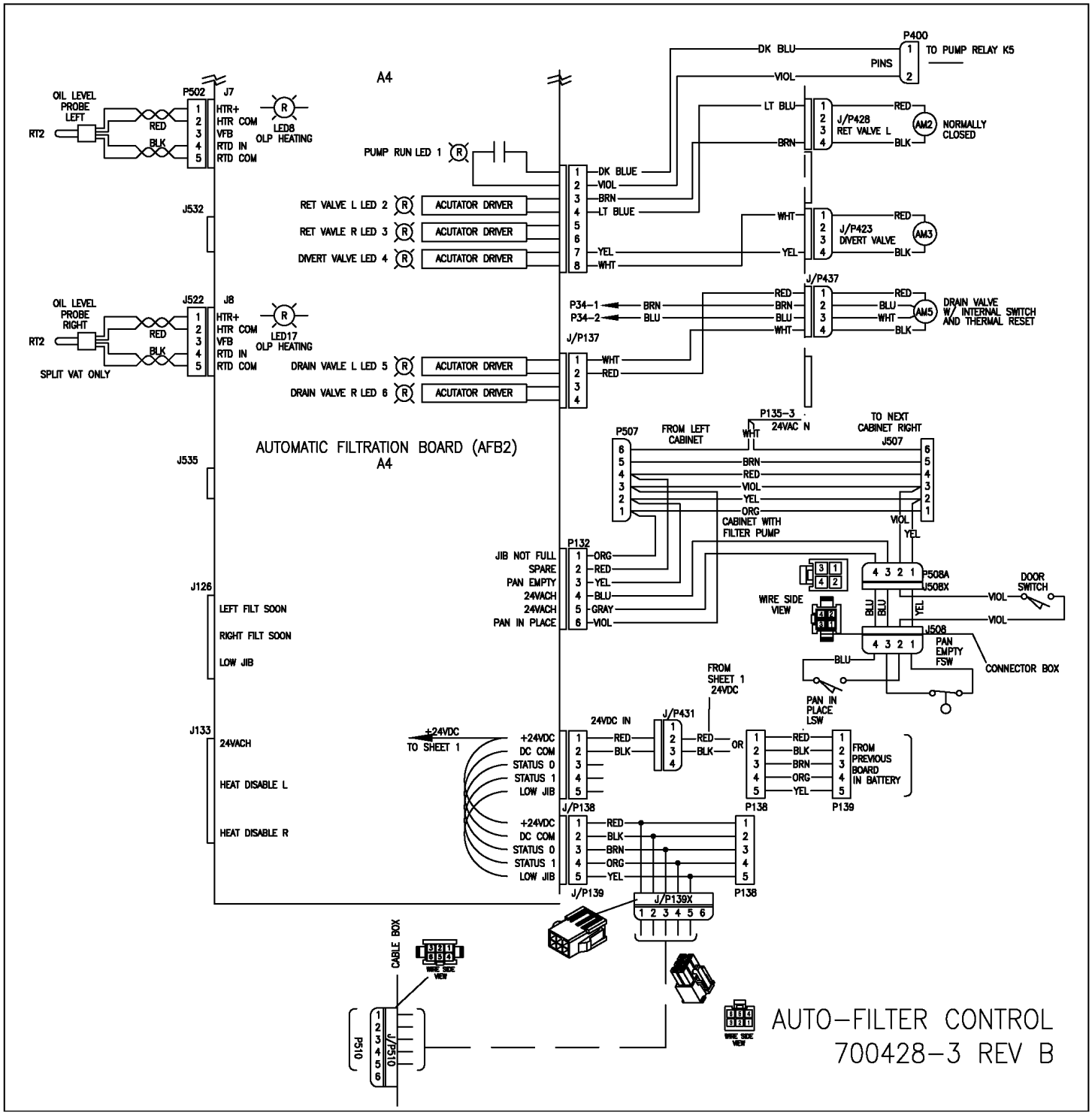
A4
OIL LEVEL PROBE LEFT
RT2
P502
J7
HTR+
HTR COM
VFB
RTD IN
RTD COM
LED8
OLP HEATING
PUMP RUN LED 1
RET VALVE L LED 2
RET VAVLE R LED 3
DIVERT VALVE LED 4
ACUTATOR DRIVER
J532
OIL LEVEL PROBE RIGHT
J522
J8
LED17
SPLIT VAT ONLY
DRAIN VAVLE L LED 5
DRAIN VALVE R LED 6
AUTOMATIC FILTRATION BOARD (AFB2)
A4
J535
J126
LEFT FILT SOON
RIGHT FILT SOON
LOW JIB
J133
24VACH
HEAT DISABLE L
HEAT DISABLE R
P400
TO PUMP RELAY K5
PINS
DK BLU
VIOL
LT BLU
BRN
J/P428
RET VALVE L
NORMALLY CLOSED
AM2
WHT
YEL
J/P423
DIVERT VALVE
AM3
J/P437
DRAIN VALVE W/ INTERNAL SWITCH AND THERMAL RESET
AM5
P34-1
P34-2
J/P137
P135-3
24VAC N
FROM LEFT CABINET
TO NEXT CABINET RIGHT
P507
J507
CABINET WITH FILTER PUMP
P132
JIB NOT FULL
SPARE
PAN EMPTY
24VACH
PAN IN PLACE
P508A
J508X
WIRE SIDE VIEW
DOOR SWITCH
J508
PAN EMPTY FSW
CONNECTOR BOX
PAN IN PLACE LSW
FROM SHEET 1 24VDC
J/P431
24VDC IN
+24VDC TO SHEET 1
DC COM
STATUS 0
STATUS 1
LOW JIB
J/P138
P138
FROM PREVIOUS BOARD IN BATTERY
P139
J/P139
J/P139X
CABLE BOX
P510
J/P510
AUTO-FILTER CONTROL
700428-3 REV B

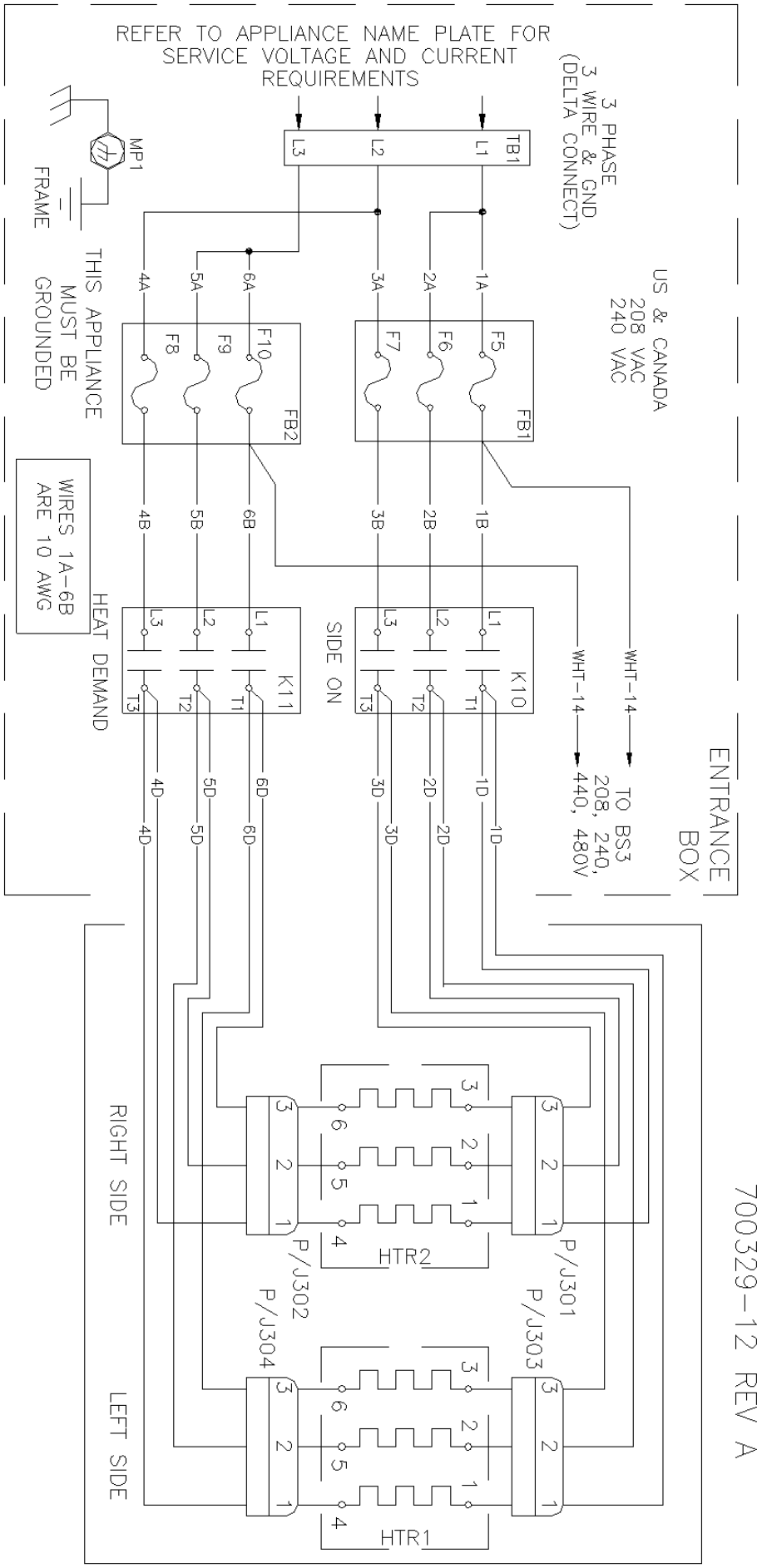
REFER TO APPLIANCE NAME PLATE FOR SERVICE VOLTAGE AND CURRENT REQUIREMENTS
3 PHASE 3 WIRE & GND (DELTA CONNECT)
US & CANADA 208 VAC 240 VAC
TB1
L1
L2
L3
MP1
FRAME
THIS APPLIANCE MUST BE GROUNDED
FB1
FB2
F5
F6
F7
F8
F9
F10
1A
2A
3A
4A
5A
6A
1B
2B
3B
4B
5B
6B
WIRES 1A–6B ARE 10 AWG
HEAT DEMAND
K10
K11
T1
T2
T3
SIDE ON
WHT-14
TO BS3 208, 240, 440, 480V
ENTRANCE BOX
1D
2D
3D
4D
5D
6D
RIGHT SIDE
LEFT SIDE
P/J301
P/J302
P/J303
P/J304
HTR1
HTR2
700329-12 REV A

NOTES

CONTACT THE FACTORY

TECHNICAL SUPPORT
24 HOURS
Phone: +1 (603) 225-6684 Option 2
E-mail: techservice@pitco.com

PARTS IDENTIFICATION
Monday through Friday, 7AM—9PM EST
Phone: +1 (603) 225-6684 Option 3
E-mail: parts@pitco.com

Pitco Frialator
P.O. Box 501
Concord, NH 03302-0501

Web: http://www.pitco.com

Authorized Service and Parts Distributors Locator:
https://www.pitco.com/english/service/get-in-touch/service

Commercial Kitchen Equipment Parts

Find more Pitco equipment resources at

parthubz.com/equipment/pitco

Need parts or service?

Call 833-700-8006

support@parthubz.com

parthubz.com