Commercial Kitchen Equipment Parts

RANDELL 8395N

Randell 8395N User Manual

Provided by PartHubz

parthubz.com

833-700-8006 | support@parthubz.com

PART NUMBER PP MNL1803, REV. H (05/22)

randell

OPERATOR MANUAL

IMPORTANT INFORMATION, KEEP FOR OPERATOR

888-994-7636, fax 888-864-7636
unifiedbrands.net

unified brands

THIS MANUAL MUST BE RETAINED FOR FUTURE REFERENCE. READ, UNDERSTAND AND FOLLOW THE INSTRUCTIONS AND WARNINGS CONTAINED IN THIS MANUAL.

FOR YOUR SAFETY Do not store or use gasoline or other flammable vapors and liquids in the vicinity of this or any other appliance.

WARNING R290 flammable refrigerant in use. Improper installation, adjustment, alteration, service or maintenance can cause property damage, injury or death. Read the installation, operating and maintenance instructions thoroughly before installing or servicing this equipment.

NOTIFY CARRIER OF DAMAGE AT ONCE It is the responsibility of the consignee to inspect the container upon receipt of same and to determine the possibility of any damage, including concealed damage. Unified Brands suggests that if you are suspicious of damage to make a notation on the delivery receipt. It will be the responsibility of the consignee to file a claim with the carrier. We recommend that you do so at once.

Manufacture Service/Questions 888-994-7636.

This manual provides information for:

8000-290 & 9000W-290 SERIES PREP TABLES

RETAIN THIS MANUAL FOR FUTURE REFERENCE

NOTICE: Due to a continuous program of product improvement, Unified Brands reserves the right to make changes in design and specifications without prior notice.

NOTICE: Please read the entire manual carefully before installation. If certain recommended procedures are not followed, warranty claims will be denied.

MODEL NUMBER _____

SERIAL NUMBER _____

INSTALLATION DATE _____

The serial number is located behind the hinged vented door of the compressor machine compartment. An example is shown here.

randell

SERIAL NUMBER **XXXXXXXXX**
MODEL NUMBER **XXXXXXXXX**
DESCRIPTION

EQUIPMENT DESCRIPTION

MODEL	PAN CAPACITY 1/3 SIZE	L	D	H			DOORS	STORAGE CU. FT.	HP	VOLT	AMPS	NEMA	SHIP WT.
				WORK SURFACE	REAR OF UNIT (CLOSED COVER)	OVERALL (COVER OPEN)							
8148N-290	6	48”	33”	35”	44”	52.5”	(1)27”	9.0	1/3	115/60/1	6	5-15P	405
8260N-290	8	60”	33”	35”	44”	52.5”	(2)24”	14.67	1/3	115/60/1	6	5-15P	459
8268N-290	9	68”	33”	35”	44”	52.5”	(2)27”	17.76	1/3	115/60/1	6	5-15P	484
8383N-290	11	83”	33”	35”	44”	52.5”	(2)24”,(1)21”	23.55	(2) 1/4	115/60/1	5.8	5-15P	585
8395N-290	13	95”	33”	35”	44”	52.5”	(3)27”	28.18	(2) 1/4	115/60/1	5.8	5-15P	630
84111N-290	15	111”	33”	35”	44”	52.5”	(3)24”,(1)21”	32.81	(2) 1/4	115/60/1	5.8	5-15P	675

MODEL	PAN CAPACITY 1/6 SIZE	L	D	H			DOORS	STORAGE CU. FT.	HP	VOLT	AMPS	NEMA	SHIP WT.
				WORK SURFACE (NO CUTTING BOARD)	REAR OF UNIT (NO COVER)	OVERALL							
8148W-290	21	48”	33”	35”	46.5”	53.5”	(1)27”	9.0	1/3	115/60/1	6	5-15P	530
8268W-290	30	68”	33”	35”	46.5”	53.5”	(2)27”	17.76	1/3	115/60/1	6	5-15P	595
8395W-290	42	95”	33”	35”	46.5”	53.5”	(3)27”	28.18	(2) 1/4	115/60/1	5.8	5-15P	785

MODEL	PAN CAPACITY 1/6 SIZE	L	D	H	DOORS	STORAGE CU. FT.	HP (BASE & RAIL)	VOLT	AMPS	NEMA	SHIP WT.
9148W-290	18	48"	33"	46.5"	(1) 27"	5.5	1/3	115/60/1	6	5-15P	405
9260W-290	24	60"	33"	46.5"	(2) 24"	9.8	1/3	115/60/1	6	5-15P	465
9272W-290	30	72"	33"	46.5"	(2) 27"	11.2	1/3	115/60/1	6	5-15P	510

NSF c UL us MADE IN USA

Information contained in this document is known to be current and accurate at the time of printing/creation. Unified Brands recommends referencing our product line websites, unifiedbrands.net, for the most updated product information and specifications. © 2022 Unified Brands. All Rights Reserved.

IMPORTANT - READ FIRST - IMPORTANT

INTERIOR EVAPORATOR COVER

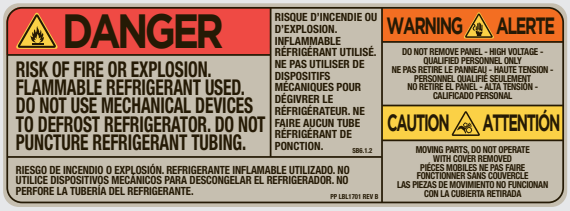

EXTERIOR OF UNIT

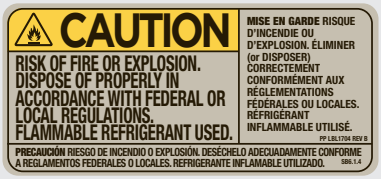

NEAR EXPOSED REFRIGERANT TUBING

NEAR MACHINE COMPARTMENT AND NAMEPLATE

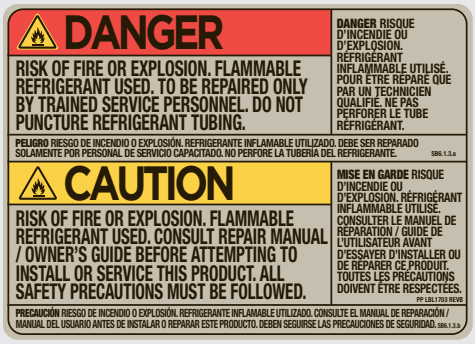

INSTALLATION

CAUTION: THIS UNIT CONTAINS R290 FLAMMABLE REFRIGERANT. USE CAUTION WHEN HANDLING MOVING AND USE OF THE REFRIGERATOR OR FREEZER. AVOID DAMAGING THE REFRIGERANT TUBING OR INCREASE THE RISK OF A LEAK.

WARNING: FAILURE TO FOLLOW INSTALLATION GUIDELINES AND RECOMMENDATIONS MAY VOID THE WARRANTY ON YOUR UNIT.

WARNING: IT IS IMPORTANT THAT YOUR UNIT HAS ITS OWN DEDICATED LINE. CONDENSING UNITS ARE DESIGNED TO OPERATE WITH A VOLTAGE FLUCTUATION OF PLUS OR MINUS 10% OF THE VOLTAGE INDICATED ON THE UNIT DATA TAG. BURN OUT OF A CONDENSING UNIT DUE TO EXCEEDING VOLTAGE LIMITS WILL VOID THE WARRANTY.

THE DANFOSS CONTROLLER HAS LOW VOLTAGE PROTECTION AND WILL NOT OUTPUT VOLTAGE TO THE COMPRESSOR IF VOLTAGE IS LESS THAN 104V.

WARNING: IT IS IMPORTANT THAT A VOLTAGE READING BE MADE AT THE COMPRESSOR MOTOR ELECTRICAL CONNECTIONS, WHILE THE UNIT IS IN OPERATION TO VERIFY THE CORRECT VOLTAGE REQUIRED BY THE COMPRESSOR IS BEING SUPPLIED. LOW OR HIGH VOLTAGE CAN DETRIMENTALLY AFFECT OPERATION AND THEREBY VOID ITS WARRANTY.

WARNING: EVAPORATOR FANS RUN CONTINUOUSLY WHILE THE BASE IS POWERED ON.

WARNING: THIS UNIT IS INTENDED FOR USE IN LABORATORIES IN COMMERCIAL, INDUSTRIAL, OR INSTITUTIONAL OCCUPANCIES AS DEFINED IN THE SAFETY STANDARD FOR REFRIGERATION SYSTEMS, ASHRAE 15.

SELECTING A LOCATION FOR YOUR NEW UNIT

The following conditions should be considered when selecting a location for your unit:

1. *Floor Load:* The area on which the unit will rest must be level, free of vibration, and suitably strong enough to support the combined weights of the unit plus the maximum product load weight. All casters must be in contact with the floor to support the weight. Casters may require shims in order for the caster to be in contact with the floor. NOTE: If there is a question pertaining to weight load limits, consult the factory at 1-888-994-7636.
2. *Clearances:* Unit shall have a clearance of 0 inches at the top, 0 inches at the rear and 0 inches at each side.
3. *Ventilation:* The air cooled self contained unit requires a sufficient amount of cool clean air. Avoid surrounding your unit around other heat generating equipment and out of direct sunlight. Also, avoid locating in an unheated room or where the room temperature may drop below 70° F (21°C) or above 86°F (32°C). Do not place any object that can block the ventilation exhaust from the machine compartment register.

INSTALLATION CHECKLIST

After the final location has been determined, refer to the following checklist prior to start-up:

1. Check all exposed refrigeration lines to ensure that they are not kinked, dented, or rubbing together or rubbing against any steel.
2. Check all visible components for any potential damage.
3. Check that the condenser and evaporator fans rotate freely without striking any stationary members.
4. Unit must be property leveled; Check all legs or casters ensure they all are in contact with the floor while maintaining a level work surface. Adjusting bullet feet height or shimming casters may be necessary if the floor is not level. NOTE: Damage to equipment may result if not followed. Unified Brands is not responsible for damage to equipment if improperly installed.
5. Plug unit into power source. Unit will come on. If unit does not turn on, refer to controller operation section of this manual to manually turn on the unit.
6. Allow unit time to cool down to holding temperature. If temperature adjustments are required, the control is located on the front panel. Confirm that the units is holding the desired temperature.
7. If unit has drawers, check drawer to ensure the drawer slides freely and fully extents along with seating in the cabinet properly when closed.
8. Refer to the front of this manual for serial number location. Please record this information in your manual on page 1 now. It will be necessary when ordering replacement parts or requesting warranty service.
9. Allow your unit to operate for approximately 45 minutes before putting in food in the rail. Allow 2 hours for base of the unit to cool down to storage temperature, prior to loading product. NOTE: All motors are oiled and sealed.

ELECTRICAL SUPPLY

The wiring should be done by a qualified electrician in accordance with local electrical codes. A properly wired and grounded outlet will assure proper operation. Please consult the data tag attached to the compressor to ascertain the correct electrical requirements. Supply voltage and amperage requirements are located on the serial number tag located on the rear interior wall.

OPERATION

DAILY OPERATING INSTRUCTIONS

MORNING STARTUP

1. Close the rail clean out valve located behind the louver and close the rail lid(s).
2. Turn on the condiment rail by pressing and holding the rail control power button until the LED display turns on. Let the unit cool for a minimum of 45 minutes.
3. Load pre-chilled product (37° or less) in standard pans and proceed with food preparation.

NORMAL OPERATION (Throughout day)

1. Normal rail temperature reading will be less than 30° (rail control readout does not represent food or air temperatures).
2. Lids should be kept closed during periods of inactivity to keep product temperatures as cool and fresh as possible.
3. The frost above the product pans may come and go throughout the day – this is normal. The unit automatically regulates the rail temperature to keep your food safe and fresh.
4. Although your maketable was designed for heavy use, excessive door openings should be avoided in order to maintain proper base temperature and reduce the possibility of coil freeze-up.

NIGHTLY ENERGY-SAVING SHUT DOWN

1. Turn off the condiment rail by pressing and holding the rail control power button until the LED display turns off.
2. Remove product from the rail at the end of the day's preparation. The product may be stored in the refrigerated base compartment or another cooler.
3. Remove any food spillage or debris from the rail, drain excess water and food through the clean out valve located behind the louvered panel. Before opening valve, position a suitable water tight container below valve to catch debris and liquid.
4. Rail cleaning and sanitizing may be performed at this time (recommended).
5. The base will continue to operate normally and may be used for overnight storage.

This equipment is intended for use in rooms having an ambient temperature of 30°C/86°F or less (NSF labeling requirement).

Use QR code to easily access more detailed operational information or instructions in Spanish or contact factory.

888-994-7636 UNIFIEDBRANDS.NET

PP LBL755R REVA

MECHANICAL COMPARTMENT

WARNING: BASE EVAPORATOR FANS ARE ALWAYS IN OPERATION WHEN THE UNIT IS ENERGIZED. DISCONNECT POWER TO THE UNIT PRIOR TO PERFORMING MAINTENANCE.

1. To power on the base, press and hold the base control power button until the LED display turns on. To power on the rail, press and hold the rail control power button until the LED display turns on. The power controls are located above the louver panel.
2. To power off the base press and hold the base control power button until the LED display turns off. To power off the rail press and hold the rail control power button until the LED display turns off. The power controls are located above the louver panel.

3. The drain valve for the upper rail is found behind the hinged vented door. The rail may be drained by placing a pan under the drain valve and opening the valve. (See Evening Shut Down of Prep Rail).

MORNING STARTUP OF PREP RAIL

1. Unit cleaning may be performed at this time.
2. Turn on unit. See item 2 under the Mechanical Compartment section above for powering on the rail.
3. Allow a minimum 45 minutes for your unit to cool down before loading product. A uniform frost pattern will appear on side walls and bottom of prep rail area.
4. Load the product and proceed with food preparation. NOTE: Product entering unit must be at 35°F +/- 2°F.

EVENING SHUT DOWN OF PREP RAIL

1. Remove product from unit at the end of the day's preparation.
2. Turn off unit. See item 3 under the Mechanical Compartment section above for powering on the rail.
3. Unit cleaning may be performed at this time if the frost has melted off the surface.
4. Once defrosted, the rail drain may be opened to remove any water that has resulted from the defrosting procedure.

WARNING: IT IS RECOMMENDED TO ONLY MAKE CHANGES OF 2 DEGREE INCREMENTS AT A TIME. ALLOW FOR THE UNIT TO OPERATE 24 HOURS BETWEEN ADJUSTMENTS. IF THE 2 DEGREE ADJUSTMENT IS NOT ENOUGH ANOTHER ADJUSTMENT CAN BE MADE. IF THE SETTINGS NEED TO GO ABOVE OR BELOW THIS POINT THERE MAY BE OTHER CONTRIBUTING FACTORS AS TO THE CAUSE OF THE TEMPERATURE VARIANCES, PLEASE CONTACT THE FACTORY AT 1-800-621-8560.

AMBIENT CONDITIONS

Unit is designed for normal operating temperatures between 70° F (21°C) - 86°F (32°C). Operating outside of those temperatures may cause premature product wear or failure.

Unified Brands has attempted to preset the temperature control to ensure that your unit runs at an optimum temperature, but due to varying ambient conditions, including elevation, food type and your type of operation, you may need to alter this temperature using control adjustment until desired temperature is reached.

CAREL CONTROLLER OPERATION

LED	FUNCTION
	Compressor energized
	Defrost in progress
	Evaporator fan energized
	An alarm is occurring

POWER ON / OFF: Press and hold the Power Button for more than 3 seconds or until LED display turns On/Off.

MANUAL DEFROST: Press and hold the Defrost Button for more than 3 seconds (melting snowflake will light).

CHANGE SET POINT: To raise temperature

1. Press and hold set button for 1 second to access set point.
2. When set point starts flashing, press up button to adjust set point.
3. Press set button for 3-seconds to save set point.

CHANGE SET POINT: To lower temperature

1. Press and hold set button for 1 second to access set point.
2. When set point starts flashing, press down button to adjust set point.
3. Press set button for 3-seconds to save set point.

DANFOSS CONTROLLER OPERATION

LED	FUNCTION
	Compressor energized & Evaporator fan de-energized
	Defrost in progress

	Fans delay after defrost completion
	Evaporator fan energize
	An alarm is occurring
ºC / ºF	Temperature unit

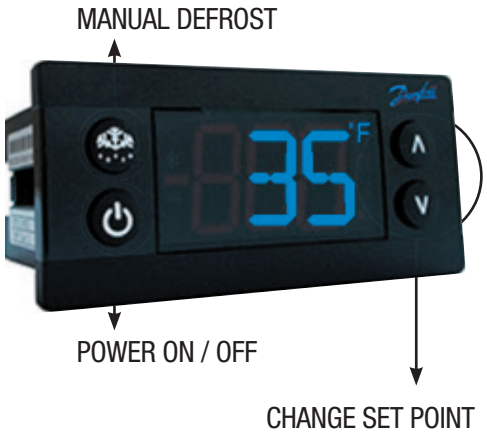

POWER ON / OFF: Press and hold the power button until LED display turns On / Off

MANUAL DEFROST: Press and hold "Defrost" Button

CHANGE SET POINT: To raise temperature

1. Press and hold "Λ" to access set point.
2. When set point start flashing, Press "Λ" to adjust set point.
3. After 30 seconds, the display automatically reverts to showing the current temperature.

CHANGE SET POINT: To lower temperature

1. Press and hold "v" to access set point.
2. When set point start flashing, Press "v" to adjust set point.
3. After 30 seconds, the display automatically reverts to showing the current temperature.

CHANGE FROM ºF /ºC :

1. Press the up/down buttons simultaneously for 5 seconds to access the menu.
2. Password is requested. Password is 000.
3. Press the bottom left button to OK the password.
4. Using the up/down buttons, navigate to the "diS" level. Press the bottom left button to OK the selection.
5. Using the up/down buttons, navigate to the "CFu" level. Press the bottom left button to OK the selection.
   a. "-F" designates Fahrenheit.
   b. "-C" designates Celsius.
6. Press the top left button repeatedly to return to exit and return to the home screen.

DRAINING THE RAIL

1. Open hinged mechanical compartment door
2. Place container under drain valve
3. Open valve until all water has drained
4. Close valve
5. Discard water

DRAWER REMOVAL

1. Fully extend the drawer that is to be removed.
2. Remove product pans from drawer.
3. Lift up the drawer stop tabs on each side of drawer track.
4. Pull drawer out while lifting the tabs.

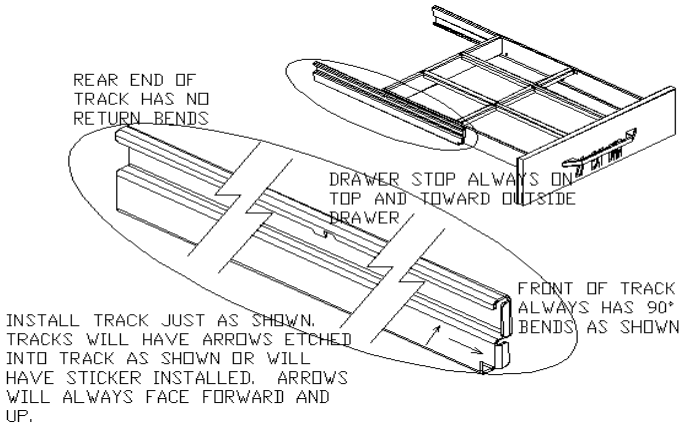

DRAWER INSTALLATION

To remove and re-install individual drawers and drawer tracks, please refer to the figure above for proper installation instructions.

MAINTENANCE

WARNING: DO NOT USE SHARP UTENSILS AND/OR OBJECTS.

WARNING: DO NOT USE STEEL PADS, WIRE BRUSHES, SCRAPERS, OR CHLORIDE CLEANERS TO CLEAN YOUR STAINLESS STEEL.

CAUTION: DO NOT USE ABRASIVE CLEANING SOLVENTS, AND NEVER USE HYDROCHLORIC ACID (MURIATIC ACID) ON STAINLESS STEEL.

WARNING: DO NOT PRESSURE WASH EQUIPMENT AS DAMAGE TO ELECTRICAL COMPONENTS MAY RESULT.

Unified Brands strongly suggests a preventive maintenance program which would include the following monthly, weekly, and daily procedures:

If a failure of the equipment is a direct result of any of the Preventative Maintenance guidelines being neglected, the repairs and parts replacements will not be covered under warranty.

It is recommended that the customer contact the local Authorized Service Agent to provide a quote to perform periodic Preventative Maintenance.

WEEKLY PM PROCEDURES

1. Clean all gaskets on a weekly if not daily basis with a solution of warm water and a mild detergent to extend gasket life. Do not use bleach for cleaning gaskets. Bleach will cause the gaskets to become brittle and not reach their normal life expectancy.
2. Clean and disinfect rail drains with a solution of warm water and mild detergent on a weekly basis. It is recommended to open and close the drain valve as the hot water is flowing through to clean any debris from the internal valve components.

MONTHLY PM PROCEDURES

1. Cleaning of all condenser coils on a monthly basis. Condenser coils are a critical component in the life of the compressor and must remain clean to assure proper air flow and heat transfer. Failure to maintain this heat transfer will affect unit performance and eventually destroy the compressor. Clean the condenser coils with coil cleaner and/or a vacuum, cleaner and brush. NOTE: Brush coil in direction of fins, normally vertically as to not damage or restrict air from passing through condenser.
2. Clean and disinfect drain lines and evaporator pan with a solution of warm water and mild detergent on a monthly basis. Remove clear plastic drain line from plastic tray of condensing unit and place pan under end of drain tube. Discard waste water from pan when cleaning is complete. Re-insert plastic drain tube into position on condensing unit.
3. Remove drawer tracks as per instructions on Drawer Installation guidelines. Once drawers are removed wipe away any debris buildup from the drawer tracks.

   The roller bearings come lubricated from the factory. Excessive oils and or water may remove the oils. It may be required to add lithium grease from time to time on bearings that appear dry.
4. Inspect all silicone seams at interior of the rail and refrigerated base cabinet on a monthly basis. Re-apply food grade silicone sealant as needed to any seams where silicone has peeled away or cracked. Apply silicone to a clean dry surface. Allow sufficient drying time to assure best adhesion of sealant.

RECOMMENDED CLEANERS FOR YOUR STAINLESS STEEL INCLUDE THE FOLLOWING:

JOB	CLEANING AGENT	COMMENTS
Routine cleaning	Soap, ammonia, detergent Medallion	Apply with a sponge or cloth
Fingerprints and smears	Arcal 20, Lac-O-Nu, Ecoshine	Provides a barrier film
Stubborn stains and discoloration	Cameo, Talc, Zud, First Impression	Rub in the direction of the polish lines
Greasy and fatty acids, blood, burnt-on foods	Easy-Off, Degrease It, Oven Aid	Excellent removal on all finishes
Grease and Oil	Any good commercial detergent	Apply with a sponge or cloth
Restoration/Preservation	Benefit, Super Sheen	Good idea monthly

Reference: Nickel Development Institute, Diversey Lever, Savin, Ecolab, NAFEM

Proper maintenance of equipment is the ultimate necessity in preventing costly repairs. By evaluating each unit on a regular schedule, you can often catch and repair minor problems before they completely disable the unit and become burdensome on your entire operation.

For more information on preventive maintenance, consult your local service company or CFESA member. Most repair companies offer this service at very reasonable rates to allow you the time you need to run your business along with the peace of mind that all your equipment will last throughout its expected life. These services often offer guarantees as well as the flexibility in scheduling or maintenance for your convenience. For a complete listing of current Unified Brands ASA please visit www.unifiedbrands.net.

Unified Brands believes strongly in the products it manufactures and backs those products with one of the best warranties in the industry. We believe with the proper maintenance and use, you will realize a profitable return on your investment and years of satisfied service.

REPLACEMENT PARTS

To order parts, contact your Authorized Service Agent. Supply the model designation, serial number, part description, part number, quantity, and when applicable, voltage and phase.

CONTACT US

If you have questions pertaining to the content in this manual, contact Unified Brands at 888-994-7636.

TROUBLESHOOTING

This unit is designed to operate smoothly and efficiently if properly maintained. However, the following is a list of checks to make in the event of a problem. Wiring diagrams are found at the end of this manual. When in doubt, turn unit off and contact service at 888-994-7636.

SYMPTOM	POSSIBLE CAUSE	PROCEDURE
Unit does not run	No power to unit	Plug in unit
	Control in OFF position	Turn controller on
	Faulty control	Call for service at 888-994-7636
Unit too cold	Incorrect set point	Adjust control set point
Unit too warm	Door / drawer ajar	Ensure door / drawer is fully closed
	Gasket torn or out of place	Inspect the gasket for wear and position
	Incorrect set point	Adjust control set point
	Warm product introduced to cabinet	Pre-chill product 37ºF
	Ice on the coil	Initiate manual defrost
Unit noisy	Ice on the coil	Initiate manual defrost
Unit does not defrost	Excessive ice on the coil	Initiate manual defrost

CAREL CONTROLLER CODES

DISPLAYED ALARM CODE	ALARM
E0	Control probe
E1	Defrost probe
dOr	Open door
LO	Low temperature
HI	High temperature
CHt	Dirty condenser

DANFOSS CONTROLLER CODES

DISPLAYED ALARM CODE	ALARM	ACTION
Hi	High Temperature Alarm	Inspect door/drawer sealing
		Contact service
Lo	Low Temperature Alarm	Contact service
CON	Condenser Temperature High Limit	Clean condenser coil
		Inspect coil for any objects obstruction hindering airflow
		Contact service
uHi	Line Voltage Too High	Verify voltage of power source, to be performed by qualified technician
		Contact service
uLi	Line Voltage Too Low	Verify voltage of power source, to be performed by qualified technician
		Contact service

LEA	Continuous Compressor Runtime	Inspect door/drawer sealing
		Inspect condenser coil, clean if necessary
		Contact service
E01	S1 Sensor Failure	Contact service
E02	S2 Sensor Failure	Contact service
E03	S3 Sensor Failure	Contact service
E04	S4 Sensor Failure	Contact service

SERVICE

CAUTION: COMPONENT PARTS SHALL BE REPLACED WITH FACTORY OEM PARTS. SERVICE WORK SHALL BE DONE BY FACTORY AUTHORIZED SERVICE PERSONNEL, SO AS TO MINIMIZE THE RISK OF POSSIBLE IGNITION DUE TO INCORRECT PARTS OR IMPROPER SERVICE.

CAUTION: BEFORE MAKING ANY REPAIRS, ENSURE THE UNIT IS DISCONNECTED FROM ITS POWER SOURCE.

This piece of equipment uses a R290 Refrigeration system. This equipment has been clearly marked on the serial tag the type of refrigerant that is being used. There is also a warning labels stating that the unit contains R290 refrigerant. R290 is safe to use as long as you follow these warning labels.

No smoking or open flames when servicing this equipment. If needed, use a CO2 or powder type fire extinguisher.

Replacement parts used on any R290 Refrigeration system cabinet must have specific UL certification for non-sparking components.

Only authorized service technician, certified in R290 system should service this equipment.

MANIFOLD SET

A R134A manifold set can be used for servicing this equipment.

REFRIGERANT RECOVERY

Follow all national and local regulations for R-290 refrigerant recovery.

LEAKING CHECKING AND REPAIR

Leak check an R-290 system the same way you would an R-134a or R-404A system with the following exceptions.

1. Do not use a Halid leak detector on a R290 system.
2. Electronic leak detector must be designated specifically for combustible gas.

Use of a bubble solution or an ultrasonic leak detector are acceptable.

When repairing a leak, it is recommended using oxygen free dry nitrogen with a trace gas not exceeding 200PSI.

When accessing an R290 system, piercing valves are not to remain on the equipment in a permanent manner. After charge is recovered, Schrader valves are to be installed on the process stubs. Proper charge is to be weighed into the system and the system is to be leak checked afterwards.

The R290 equipment must have red process tubes and other devices through which the refrigerant is serviced, such as any service port. This color marking must remain on the equipment. If marking is removed, it must be replace and extend at least 2.5 centimeters (1”) from the compressor.

CHARGING

Follow the charge amount specified on the data tag. It is recommended to use the shortest hoses possible to prevent undercharging.

- Ensure the system is sealed and leak checked
- Evacuate system to a minimum 500 micron
- Weigh in correct charge
- Leak check the system again
- Bleed the refrigerant from the high side hose to the low side hose
- Disconnect the hoses
- Remove line taps

WARRANTY

Congratulations on the purchase of your new Unified Brands equipment. We hope you enjoy many years of reliable service in connection with the same. Please review all of the important safety and operational information contained in the Operator’s Manual for this equipment before it is placed in service. If you have any questions related to equipment set up, operations, or service, please call 888-994-7636.

In addition, please review the sales terms and conditions set forth below.

*****IMPORTANT NOTICE*****

WARRANTIES, LIMITATIONS ON WARRANTIES, AND LIMITATION OF REMEDIES

The following Warranties, Limitation on Warranties, and Limitation of Remedies are included in the terms of sale for this product. Please read this entire warranty and all warranty modifications, disclaimers, and limitations of remedies set forth herein before accepting or using this equipment or product. Customer acknowledges and accepts the provisions of this notice by Customer’s acceptance and use of the product. If these provisions are not acceptable and agreed to by Customer, then please return this product in its unused condition to Unified Brands or a Unified Brands authorized dealer.

UNIFIED BRANDS warrants this product against defects in material and workmanship under normal use and services for which this product was designed. This warranty runs only to the original end user and is in lieu of any other liability for defects. THE WARRANTIES EXPRESSED IN THESE TERMS AND CONDITIONS ARE IN PLACE OF ANY AND ALL OTHER EXPRESS WARRANTIES (UNLESS SEPARATELY STATED IN PRINTED MATERIAL PREPARED BY US DESCRIBING OUR EQUIPMENT) AND EXCLUDE ALL IMPLIED WARRANTIES, INCLUDING, BUT NOT LIMITED TO, ANY WARRANTY OF MERCHANTABILITY OR FITNESS FOR ANY PARTICULAR PURPOSE; NOR ARE THERE ANY OTHER WARRANTIES, EXPRESS OR IMPLIED, BY OPERATION OF LAW OR OTHERWISE. In no event shall UNIFIED BRANDS be liable for damages or delay or for any consequential, special or contingent damages arising out of any breach of our warranty, whether or not we have knowledge of specific needs or our employees or agents have given any specific assurances. Anyone claiming that there has been a breach of warranty by UNIFIED BRANDS must give us written notice within THIRTY (30) days after discovery of the relevant defect or the right to assert such claim will have been waived conclusively and provided further that any such claim must also be asserted within the general warranty period for such equipment and/or parts.

UNIFIED BRANDS will not be liable for any expense incurred without our prior written authorization for alterations made outside of our factory or for repairs which are not performed by UNIFIED BRANDS authorized service departments using UNIFIED BRANDS factory parts. Nor shall we be responsible for the performance of equipment as to which any repairs, revisions or alterations have been made by others.

THE EXCLUSIVE REMEDY OF THE USER OR BUYER AND THE EXCLUSIVE LIABILITY OF UNIFIED BRANDS OR ANY SELLER OF UNIFIED BRANDS PRODUCTS, FOR ANY AND ALL CLAIMS, LOSSES, INJURIES, OR DAMAGES (INCLUDING CLAIMS BASED ON BREACH OF WARRANTY, CONTRACT, NEGLIGENCE, TORT, STRICT LIABILITY, OR OTHERWISE) RESULTING FROM OR ARISING OUT OF THE USE OF HANDLING OF THIS PRODUCT, SHALL BE THE RETURN OF THE PURCHASE PRICE OR AN AMOUNT NOT TO EXCEED THE ORIGINAL PURCHASE PRICE OF THE PRODUCT OR, AT THE ELECTION OF UNIFIED BRANDS OR THE SELLER, THE REPLACEMENT OF THE PRODUCT.

randell

https://unifiedbrands.net/
Randell-Warranty-Information

CONTROLS

CALL FACTORY FOR REPLACEMENT PARTS:
888-994-7636

Parts List

SERVICE PART	CAREL CONTROLLER DESCRIPTION	8148N-290	8260N-290	8268N-290	8383N-290	8395N-290	84111N-290	8148W-290	8268W-290	8395W-290	9148W-290	9260W-290	9272W-290
RP CNT1720BCAR	CONTROLLER, CAREL, PROGRAMMED - BASE - SGL COMPR SYSTEM	X	X	X				X	X		X	X	X
RP CNT1720RCAR	CONTROLLER, CAREL, PROGRAMMED - RAIL - SGL COMPR SYSTEM	X	X	X				X	X		X	X	X
RP CNT1805BCAR	CONTROLLER, CAREL, PROGRAMMED - BASE - DBL COMPR SYSTEM				X	X	X			X			
RP CNT1805RCAR	CONTROLLER, CAREL, PROGRAMMED - RAIL - DBL COMPR SYSTEM				X	X	X			X			
RF CNT2103	THERMISTOR, CAREL, QTI, AIR SENSOR, BARE LEADS, BLACK, 10'	X	X	X	X	X	X	X	X	X	X	X	X
RF CNT2104	THERMISTOR, CAREL, QTI, COIL SENSOR, BARE LEADS, BLUE, 10'	X	X	X	X	X	X	X	X	X	X	X	X
PP STK1802	OVERLAY, CONTROL PANEL, 8000N COMMON	X	X	X	X	X	X	X	X	X	X	X	X

SERVICE PART	DANFOSS CONTROLLER DESCRIPTION	8148N-290	8260N-290	8268N-290	8383N-290	8395N-290	84111N-290	8148W-290	8268W-290	8395W-290	9148W-290	9260W-290	9272W-290
RP CNT1720BC	CONTROLLER, DANFOSS, PROGRAMMED - BASE - SGL COMPR SYSTEM	X	X	X	-	-	-	X	X	-	X	X	X
RP CNT1720RC	CONTROLLER, DANFOSS, PROGRAMMED - RAIL - SGL COMPR SYSTEM	X	X	X	-	-	-	X	X	-	X	X	X
RP CNT1805B	CONTROLLER, DANFOSS, PROGRAMMED - BASE - DBL COMPR SYSTEM	-	-	-	X	X	X	-	-	X	-	-	-
RP CNT1805R	CONTROLLER, DANFOSS, PROGRAMMED - RAIL - DBL COMPR SYSTEM	-	-	-	X	X	X	-	-	X	-	-	-
RF CNT1602	THERMISTOR, DANFOSS, QTI, COIL SENSOR, MOLDED END, BLUE, 10'	X	X	X	X	X	X	X	X	X	X	X	X
RF CNT1603	THERMISTOR, DANFOSS, QTI, AIR SENSOR, MODLED END, BLACK, 10'	X	X	X	X	X	X	X	X	X	X	X	X
PP STK1802	OVERLAY, CONTROL PANEL, 8000N COMMON	X	X	X	X	X	X	X	X	X	X	X	X

BASE UNIT, 8000N-290 & 8000W-290

CALL FACTORY FOR REPLACEMENT PARTS: 888-994-7636

Parts List

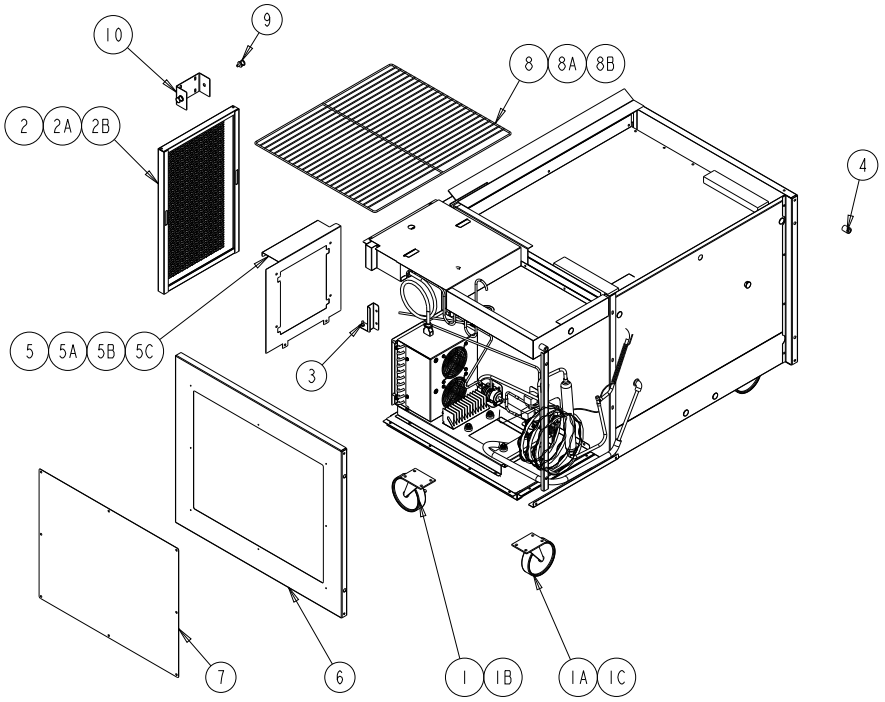

ITEM	SERVICE PART	DESCRIPTION	8148N-290	8260N-290	8268N-290	8383N-290	8395N-290	84111N-290	8148W-290	8268W-290	8395W-290
1	HD CST060	6" CASTERS W/ BRAKE	X	X	X	X	X	X	X	X	X
1A	HD CST061	6" CASTERS W/O BRAKE	X	X	X	X	X	X	X	X	X
1B	HD CST040HD	4" CASTERS W/ BRAKE	X	X	X	X	X	X	X	X	X
1C	HD CST041HD	4" CASTERS W/O BRAKE	X	X	X	X	X	X	X	X	X
2	RP LVR1803	LOUVER, HINGED	X	-	X	X	X		X	X	X
2A	RP LVR1804	LOUVER, HINGED	-	X	-	-	-	-	-	-	-
2B	RP LVR1805	LOUVER, HINGED	-	-	-	-	-	X	-	-	-
3	HD CTH9901	LOUVER MAGNET	X	X	X	X	X	X	X	X	X
4	HD BMP034	BUMPER, RUBBER	X	X	X	X	X	X	X	X	X
5	RP SHD1805	SHROUD, COND UNIT	X	-	X	-	X	-	X	X	-
5A	RP SHD1806	SHROUD, COND UNIT	-	X	-	-	-	-	-	-	-
5B	RP SHD1807	SHROUD, COND UNIT	-	-	-	X	X	-	-	-	X
5C	RP SHD1808	SHROUD, COND UNIT	-	-	-	-	-	X	-	-	-
6	RP PNL1803	COVER, ACCCESS SIDE CMPR, L OR R	-	-	-	X	X	X	-	-	X
7	HD SHL180	SHELF 22" X 25"	X	-	X	-	X	-	X	-	X
7A	HD SHL160	SHELF 19" X 25"	-	X	-	X	-	X	-	-	-
7B	HD SHL9912	SHELF 16.15" X 25"	-	-	-	X	-	X	-	-	-
8	HD PIN0102	SHELF SUPPORT PIN	X	X	X	X	X	X	X	X	X
9	RP BRK0107	SHELF SUPPORT - FRT & BACK	-	-	-	X	X	X	-	-	X
10	RP BRK0108	SHELF SUPPORT BETWEEN DOORS	X	X	X	X	X	X	X	X	X
11	RP BRK1811	LOUVER MOUNTING HINGE BRACKET	X	X	X	X	X	X	X	X	X
12*	EL WIR1703	POWER CORD 16/3 - 9' - 90	X	X	X	X	X	X	X	X	X
13*	HD LEG9902	6" LEG W/ BULLET FOOT	X	X	X	X	X	X	X	X	X
14*	RP BCK0107	S/S BACK PANEL 48"	X	-	-	-	-	-	X	-	-
14A*	RP BCK0108	S/S BACK PANEL 60"	-	X	-	-	-	-	-	-	-
14B*	RP BCK0109	S/S BACK PANEL 68"	-	-	X	-	-	-	-	X	-
14C*	RP BCK0110	S/S BACK PANEL 83"	-	-	-	X	-	-	-	-	-
14D*	RP BCK0111	S/S BACK PANEL 95"	-	-	-	-	X	-	-	-	X
14E*	RP BCK0112	S/S BACK PANEL 111"	-	-	-	-	-	X	-	-	-
15	RP END1901	SIDE PANEL	X	X	X	X	X	X	X	X	X

* = NOT SHOWN

BASE UNIT, 9000W-290

CALL FACTORY FOR REPLACEMENT PARTS: 888-994-7636

Parts List

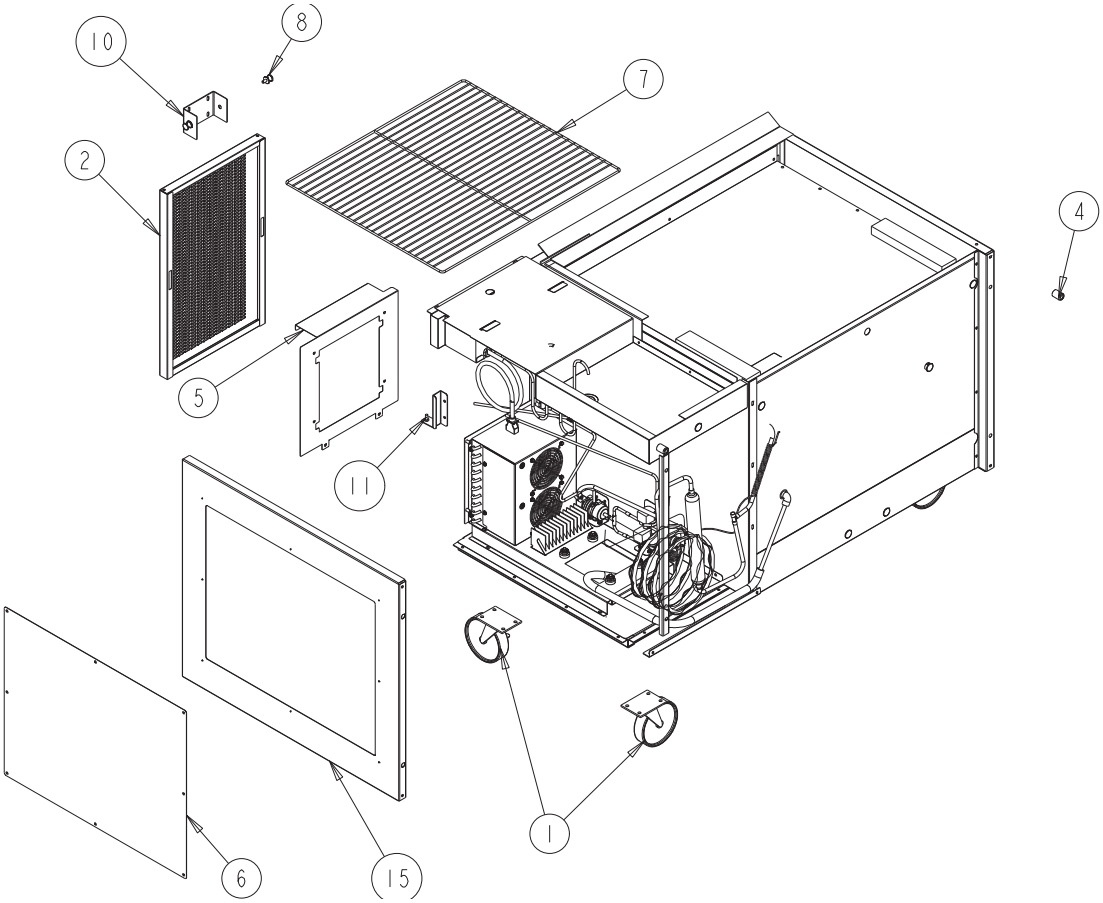

ITEM	SERVICE PART	DESCRIPTION	9148W-290	9260W-290	9272W-290
1	HD CST060	6" CASTERS W/ BRAKE	X	X	X
1A	HD CST061	6" CASTERS W/O BRAKE	X	X	X
1B	HD CST040HD	4" CASTERS W/ BRAKE	X	X	X
1C	HD CST041HD	4" CASTERS W/O BRAKE	X	X	X
2	RP LVR1807	LOUVER, HINGED	X	-	-
2A	RP LVR1808	LOUVER, HINGED	-	X	-
2B	RP LVR1809	LOUVER, HINGED	-	-	X
3	HD CTH9901	LOUVER MAGNET	X	X	X
4	HD BMP034	BUMPER, RUBBER	X	X	X
5	RP SHD1814	SHROUD, COND UNIT	X	-	-
5A	RP SHD1815	SHROUD, COND UNIT	-	X	-
5B	RP SHD1816	SHROUD, COND UNIT	-	-	X
6	HD SHL160	SHELF 19" X 25"	X	-	X
6A	HD SHL180	SHELF 22" X 25"	-	X	-
7	HD PIN001	SHELF SUPPORT PIN	X	X	X
8*	RP SPT007	SHELF SUPPORT	X	X	X
9	RP BRK1811	LOUVER MOUNTING HINGE BRACKET	X	X	X
10*	RP BRK0108	SHELF SUPPORT BETWEEN DOORS	-	X	X
11*	HD LEG9902	6" LEG W/ BULLET FOOT	X	X	X
12*	RP BCK0301	S/S BACK PANEL 48"	X	-	-
12A*	RP BCK0304	S/S BACK PANEL 60"	-	X	-
12B*	RP BCK0113	S/S BACK PANEL 72"	-	-	X
13*	EL WIR469A	CORD, 14 GA 18” FEMALE 000469-14	X	X	X
14*	EL WIR1703	POWER CORD, 9’ 16/3 W/90*-45* ANGLE PLUG (SJTO WIRE)	X	X	X

* = NOT SHOWN

FAN ASSIST

CALL FACTORY FOR REPLACEMENT PARTS:
888-994-7636

Parts List

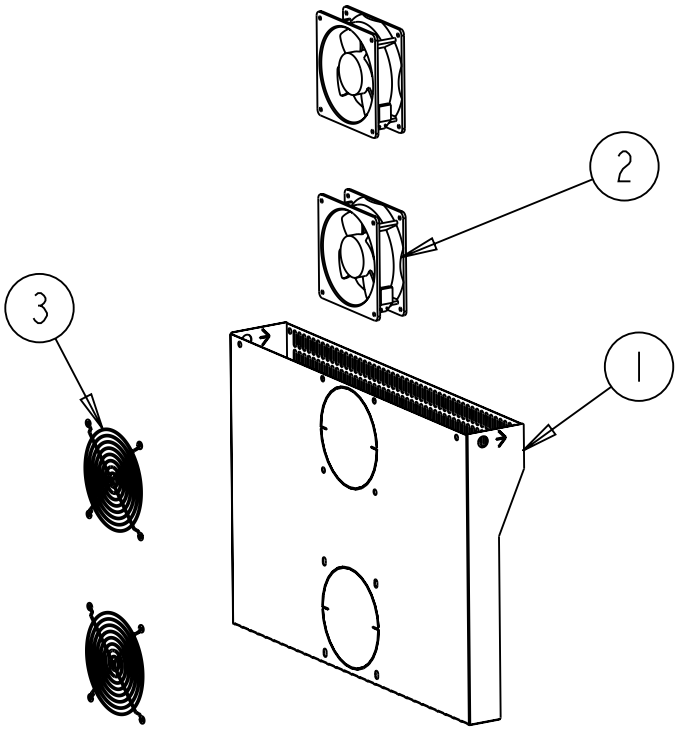

ITEM	SERVICE PART	DESCRIPTION	8148N-290	8260N-290	8268N-290	8383N-290	8395N-290	84111N-290	8148W-290	8268W-290	8395W-290
1	RP FAN1801	FAN ASSIST ASSY	-	-	-	-	X	X	-	-	X
2	RF FAN1401	FAN ASSIST MOTOR	-	-	-	-	X	X	-	-	X
3	RF FAN0703	FAN ASSIST FAN GUARD	-	-	-	-	X	X	-	-	X

* = NOT SHOWN

MECH COMPARTMENT - SINGLE COMPRESSOR

CALL FACTORY FOR REPLACEMENT PARTS: 888-994-7636

Parts List

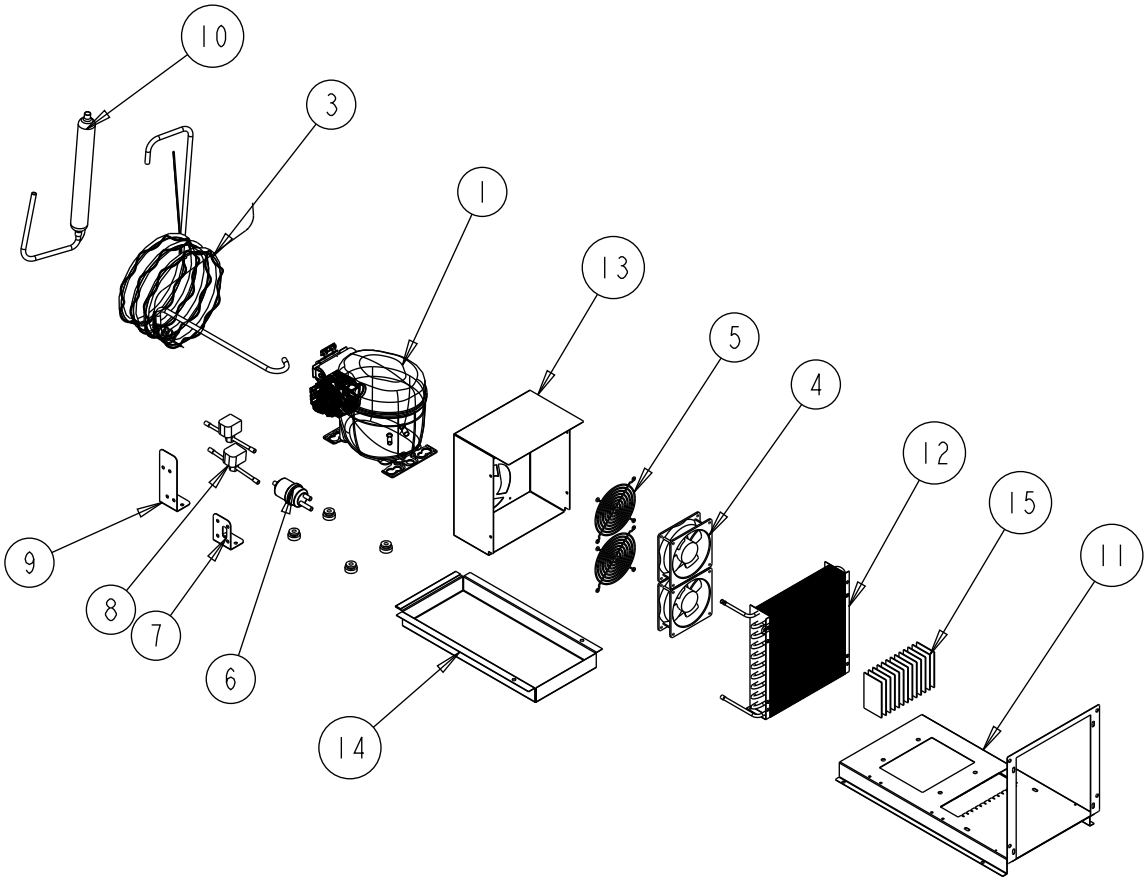

ITEM	SERVICE PART	DESCRIPTION	8148N-290	8260N-290	8268N-290	8383N-290	8395N-290	84111N-290	8148W-290	8268W-290	8395W-290	9148W-290	9260W-290	9272W-290
1	RF CMP1702	COMPRESSOR, 1/3HP, R290, EMBRACO FFU130UAX	X	X	X	-	-	-	X	X	-	X	X	X
2*	RF CMP1702SC	COMPRESSOR, START COMPONENTS	X	X	X	-	-	-	X	X	-	X	X	X
3	RP CAP1801	CAP, TUBE - RAIL	X	X	X	-	-	-	X	X	-	X	X	X
4	RF FAN1401	CONDENSER FAN	X	X	X	-	-	-	X	X	-	X	X	X
5	RF FAN0703	FAN GUARD	X	X	X	-	-	-	X	X	-	X	X	X
6	RF FLT251	FILTER DRIER, 1/4" DBL INLET	X	X	X	-	-	-	X	X	-	X	X	X
7	RP BRK1720	MOUNTING CLIP, FILTER DRIER (T07-1167)	X	X	X	-	-	-	X	X	-	X	X	X
8	RF SOL9801	SOLENDOID VALVE	X	X	X	-	-	-	X	X	-	X	X	X
9	RP BRK1812	BRACKET, SOLENOID VALVE (T07-1173)	X	X	X	-	-	-	X	X	-	X	X	X
10	RF ACM1702	ACCUMULATOR	X	X	X	-	-	-	X	X	-	X	X	X
11	RP MNT1802	COMPRESSOR ASM STAND	X	X	X	-	-	-	X	X	-	X	X	X
12	RF COI1603	CONDENSER COIL	X	X	X	-	-	-	X	X	-	X	X	X
13	RP SHD1809	CONDENSER FAN SHROUD (T07-1179)	X	X	X	-	-	-	X	X	-	X	X	X
14	RP CPN1802	DRAIN PAN - (T07-1146)	X	X	X	-	-	-	X	X	-	X	X	X
15	HD WCK1702	PAD, WICKING	X	X	X	-	-	-	X	X	-	X	X	X
16*	EL WIR470	POWER CORD, 16GA 2' MALE	X	X	X	-	-	-	X	X	-	X	X	X

* = NOT SHOWN

MECH COMPARTMENT - DOUBLE COMPRESSOR

CALL FACTORY FOR REPLACEMENT PARTS: 888-994-7636

Parts List

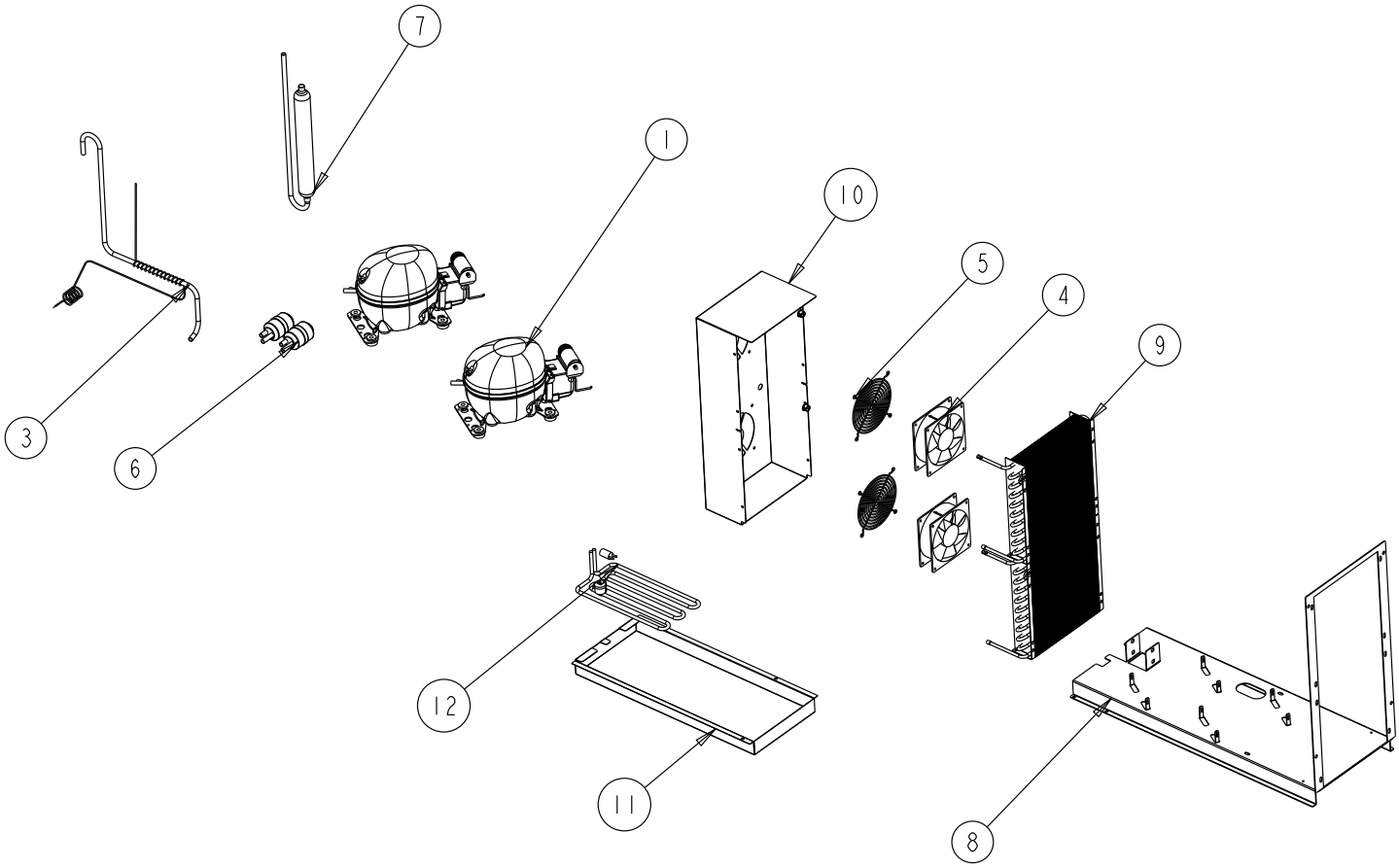

ITEM	SERVICE PART	DESCRIPTION	8148N-290	8260N-290	8268N-290	8383N-290	8395N-290	84111N-290	8148W-290	8268W-290	8395W-290
1	RF CMP1604	COMPRESSOR, 1/4 HP, R290, EMBRACO, 115V-60HZ	-	-	-	X	X	X	-	-	X
2*	RF CMP1604SC	COMPRESSOR, START COMPONENTS	-	-	-	X	X	X	-	-	X
3	RP CAP1802	CAP, TUBE - RAIL	-	-	-	X	X	X	-	-	X
4	RF FAN0601	CONDENSER FAN	-	-	-	X	X	X	-	-	X
5	HD GRD1610	FAN GUARD	-	-	-	X	X	X	-	-	X
6	RF FLT251	FILTER DRIER, 1/4" DBL INLET	-	-	-	X	X	X	-	-	X
7	RF ACM1701	ACCUMULATOR	-	-	-	X	X	X	-	-	X
8	RP MNT1803	COMPRESSOR ASM STAND (T07-1168)	-	-	-	X	X	X	-	-	X
9	RF COI1603	CONDENSER COIL	-	-	-	X	X	X	-	-	X
10	RP SHD1810	CONDENSER FAN SHROUD (T07-1169)	-	-	-	X	X	X	-	-	X
11	RP CPN1803	DRAIN PAN (T07-1170)	-	-	-	X	X	X	-	-	X
12	EL WIR274	HEATER, DRAIN PAN	-	-	-	X	X	X	-	-	X
13*	EL WIR470	POWER CORD, 16GA 2' MALE	-	-	-	X	X	X	-	-	X

* = NOT SHOWN

EVAPORATOR COIL

CALL FACTORY FOR REPLACEMENT PARTS:
888-994-7636

Parts List

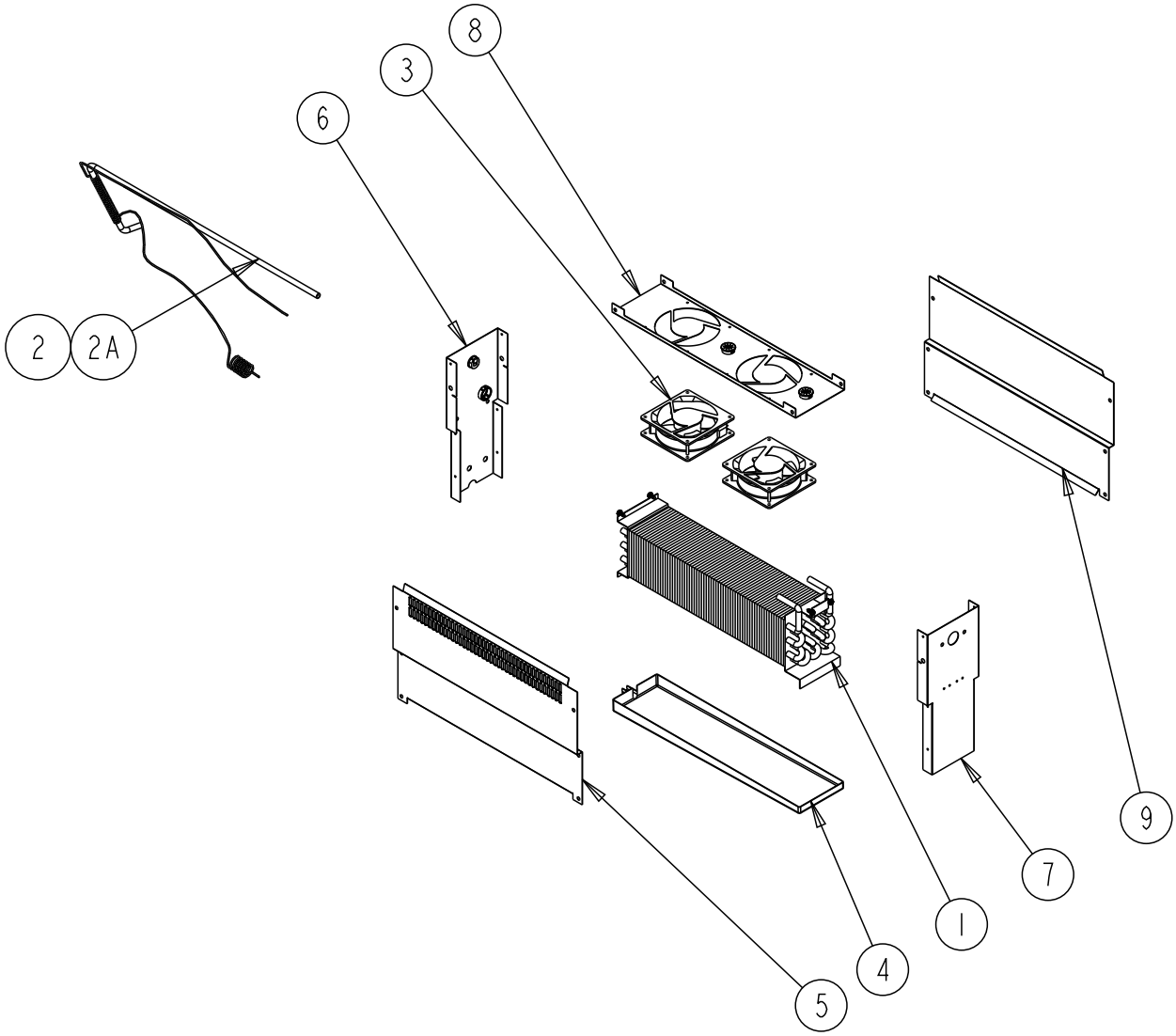

ITEM	SERVICE PART	DESCRIPTION	8148N-290	8260N-290	8268N-290	8383N-290	8395N-290	84111N-290	8148W-290	8268W-290	8395W-290
1	RF COI107	EVAPORATOR COIL	X	X	X	X	X	X	X	X	X
2	RP CAP1804	CAP, TUBE - BASE	-	-	-	X	X	X	-	-	X
2A	RP CAP1803	CAP, TUBE - BASE	X	X	X	-	-	-	X	X	-
3	RF FAN1401	FAN, EVAPORATORS	X	X	X	X	X	X	X	X	X
4	RP DRP107	EVAPORATOR DRAIN PAN	X	X	X	X	X	X	X	X	X
5	RP PNL107-290	SIDE, COIL, 8000N COMMON	X	X	X	X	X	X	X	X	X
6	RP PNL108-290	BACK, COIL, 8000N COMMON	X	X	X	X	X	X	X	X	X
7	RP PNL109-290	FRONT, COIL, 8000N COMMON	X	X	X	X	X	X	X	X	X
8	RP SHD1811	PLATE, FAN, 8000N COMMON	X	X	X	X	X	X	X	X	X
9	RP PNL1804	SIDE, COIL, NO PERF, 8000N COMMON	X	-	-	-	-	-	X	-	-

* = NOT SHOWN

EVAPORATOR COIL

CALL FACTORY FOR REPLACEMENT PARTS:
888-994-7636

Parts List

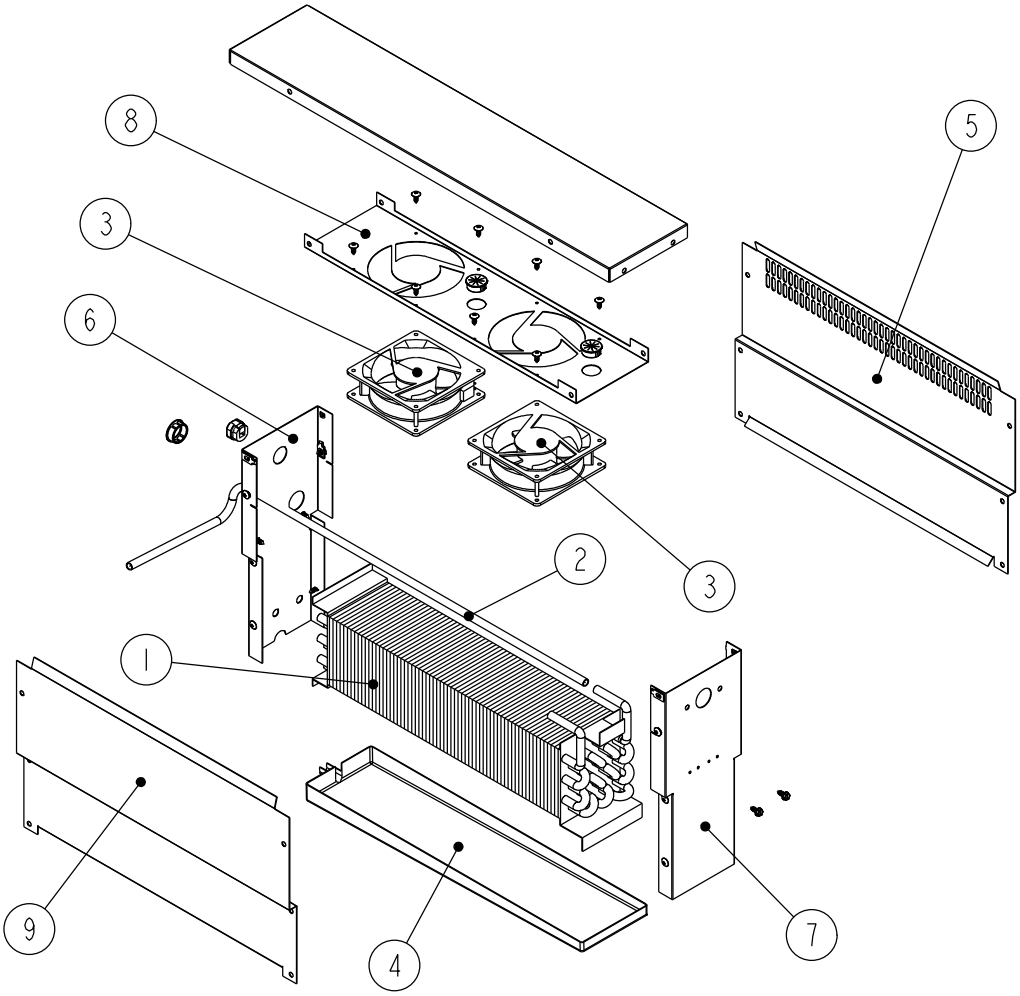

ITEM	SERVICE PART	DESCRIPTION	9148W-290	9260W-290	9272W-290
1	RF COI107	EVAPORATOR COIL	X	X	X
2	RP CAP1803	CAP, TUBE - BASE	X	X	X
3	RF FAN1401	FAN, EVAPORATORS	X	X	X
4	RP DRP107	EVAPORATOR DRAIN PAN	X	X	X
4A	RP DRP107S	EVAPORATOR DRAIN PAN/STAINLESS STEEL	X	X	X
5	RP PNL107-290	SIDE, COIL, 8000N COMMON	X	X	X
6	RP PNL108-290	BACK, COIL, 8000N COMMON	X	X	X
7	RP PNL109-290	FRONT, COIL, 8000N COMMON	X	X	X
8	RP SHD1811	PLATE, FAN, 8000N COMMON	X	X	X
9	RP PNL1804	SIDE, COIL, NO PERF, 8000N COMMON	X	-	-

* = NOT SHOWN

DOOR ASSEMBLY

CALL FACTORY FOR REPLACEMENT PARTS:
888-994-7636

Parts List

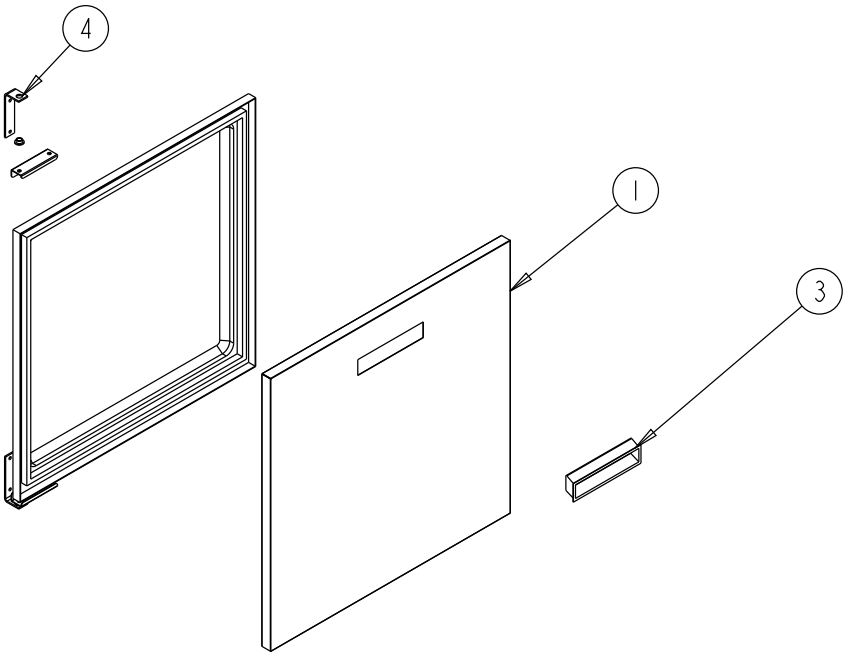

ITEM	SERVICE PART	DESCRIPTION	8148N-290	8260N-290	8268N-290	8383N-290	8395N-290	84111N-290	8148W-290	8268W-290	8395W-290
1	RF DOR0321	DOOR HINGED LEFT, 21"	-	-	-	X	-	X	-	-	-
1A	RF DOR0320	DOOR HINGED RIGHT, 21"	-	-	-	X	-	X	-	-	-
1B	RF DOR0323	DOOR HINGED LEFT, 24"	-	X	-	X	-	X	-	-	-
1C	RF DOR0322	DOOR HINGED RIGHT, 24"	-	X	-	X	-	X	-	-	-
1D	RF DOR0324	DOOR HINGED LEFT, 27"	X	-	X	-	X	-	X	-	X
1E	RF DOR0325	DOOR HINGED RIGHT, 27"	X	-	X	-	X	-	X	-	X
2*	IN GSK9902	GASKET, 18.5" X 24.5" PUSH IN	-	-	-	X	-	X	-	-	-
2A*	IN GSK1025	GASKET, 21.75" X 24.5" PUSH IN	-	X	-	X	-	X	-	-	-
2B*	IN GSK1030	GASKET, 24.5" X 24.5" PUSH IN	X	-	X	-	X	-	X	-	X
3	HD HDL0103	DOOR HANDLE (recessed)	X	X	X	X	X	X	X	X	X
4	RP HNG9900	HINGE ASSY, UNIVERSAL, LEFT/RIGHT	X	X	X	X	X	X	X	X	X
4A	RP HNG026	HINGE, STRAP L BRACKET TOP/BOTTOM	X	X	X	X	X	X	X	X	X
4B	RP HNG027	HINGE, BOTTM I BRACKET W/ COLLOR	X	X	X	X	X	X	X	X	X
4C	RP HNG023	HINGE, TOP L BRACKET W/O	X	X	X	X	X	X	X	X	X
4D	RP HNG034	HINGE, TOP DOOR LH CHANNEL	X	X	X	X	X	X	X	X	X
4E	RP HNG035	HINGE, TOP DOOR RH CHANNEL	X	X	X	X	X	X	X	X	X
5*	HD BSH050	BUSHING, NYLON DOOR	X	X	X	X	X	X	X	X	X
6*	RP HNG025	HINGE, SPRING LOAD ASSEMBLY	X	X	X	X	X	X	X	X	X

* = NOT SHOWN

DOOR ASSEMBLY

CALL FACTORY FOR REPLACEMENT PARTS:
888-994-7636

Parts List

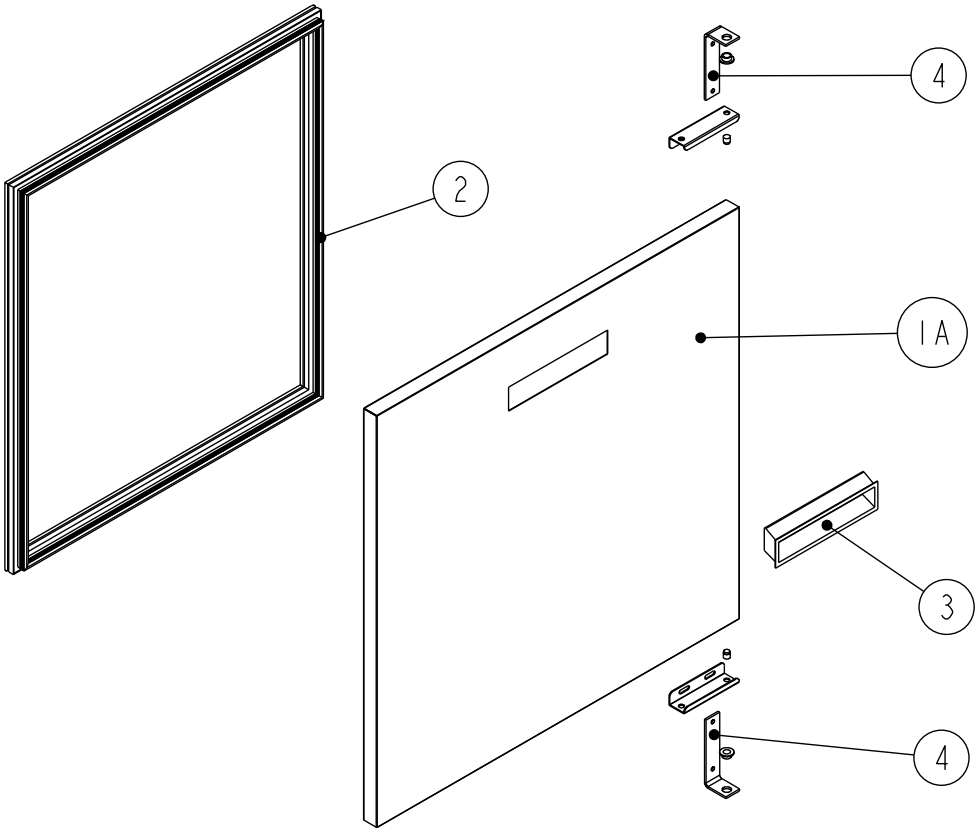

ITEM	SERVICE PART	DESCRIPTION	9148W-290	9260W-290	9272W-290
1	RP DOR0323	DOOR HINGED LEFT, 24"	-	X	-
1A	RP DOR0322	DOOR HINGED RIGHT, 24"	-	X	-
1B	RP DOR0324	DOOR HINGED LEFT, 27"	X	-	X
1C	RP DOR0325	DOOR HINGED RIGHT, 27"	X	-	X
2	IN GSK1025	GASKET, 21.75" X 24.5" PUSH IN	-	X	-
2A	IN GSK1030	GASKET, 24.5" X 24.5" PUSH IN	X	-	X
3	HD HDL0103	DOOR HANDLE (recessed)	X	X	X
4	RP HNG9900	HINGE ASSY, UNIVERSAL, LEFT/RIGHT	X	X	X
4A	RP HNG026	HINGE, STRAP L BRACKET TOP/BOTTOM	X	X	X
4B	RP HNG027	HINGE, BOTTM I BRACKET W/ COLLOR	X	X	X
4C	RP HNG023	HINGE, TOP L BRACKET W/O	X	X	X
4D	RP HNG034	HINGE, TOP DOOR LH CHANNEL	X	X	X
4E	RP HNG035	HINGE, TOP DOOR RH CHANNEL	X	X	X
5*	HD BSH050	BUSHING, NYLON DOOR	X	X	X
6*	RP HNG025	HINGE, SPRING LOAD ASSEMBLY	X	X	X

* = NOT SHOWN

DRAWER ASSEMBLY

CALL FACTORY FOR REPLACEMENT PARTS:
888-994-7636

Parts List

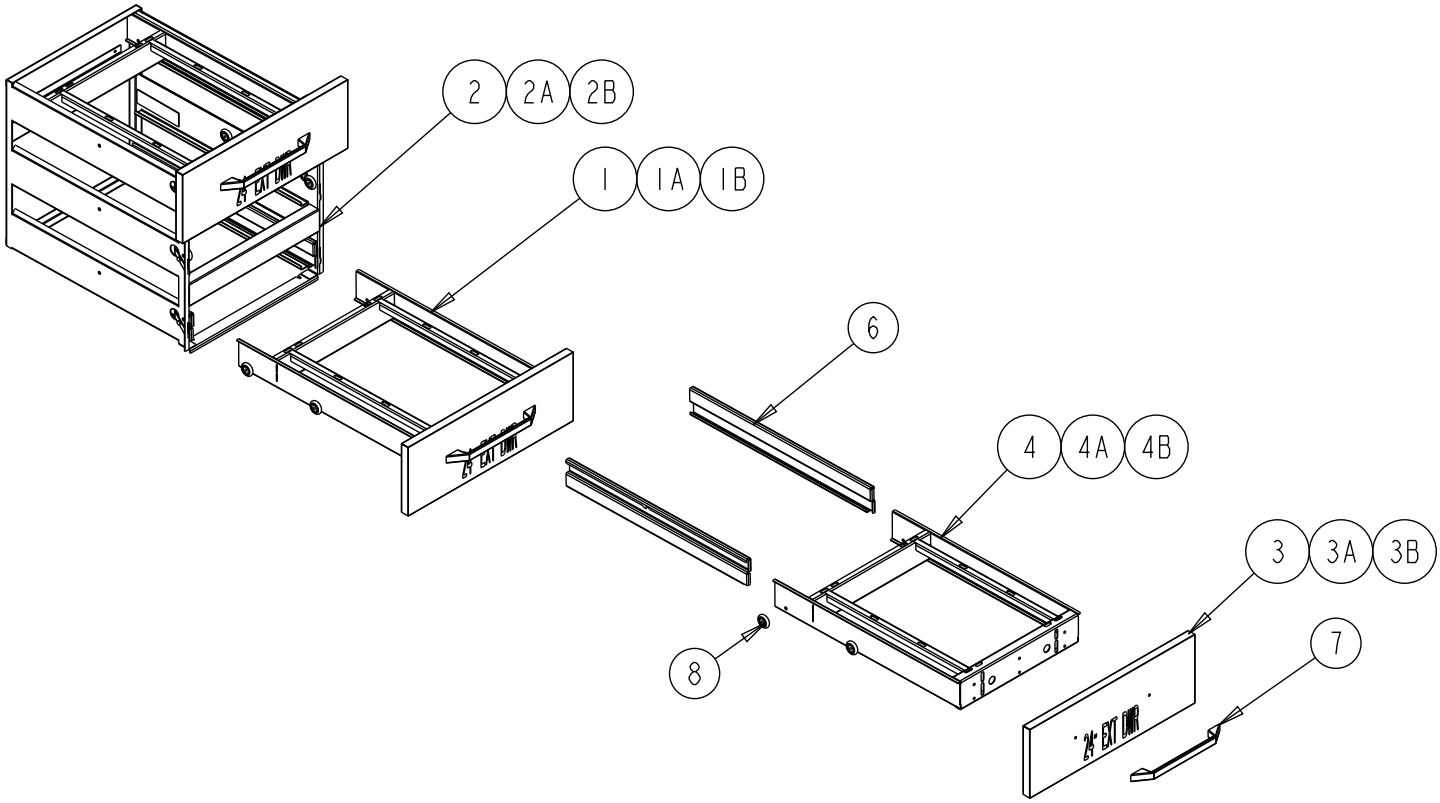

ITEM	SERVICE PART	DESCRIPTION	8148N-290	8260N-290	8268N-290	8383N-290	8395N-290	84111N-290	8148W-290	8268W-290	8395W-290
1	RP DRW0206	DRAWER ASSEMBLY - 21"	-	-	-	X	-	X	-	-	-
1A	RP DRW0201PT	DRAWER ASSEMBLY - 24"	-	X	-	X	-	X	-	-	-
1B	RP DRW0202	DRAWER ASSEMBLY - 27"	X	-	X	-	X	-	X	-	X
2	RP MOD050A	DRAWER CARTRIDGE - 21"	-	-	-	X	-	X	-	-	-
2A	RP MOD030A	DRAWER CARTRIDGE - 24"	-	X	-	X	-	X	-	-	-
2B	RP MOD029A	DRAWER CARTRIDGE - 27"	X	-	X	-	X	-	X	-	X
3	RF FRT9903	DRAWER FRONT - 21"	-	-	-	X	-	X	-	-	-
3A	RF FRT9904	DRAWER FRONT - 24"	-	X	-	X	-	X	-	-	-
3B	RF FRT9905	DRAWER FRONT - 27"	X	-	X	-	X	-	X	-	X
4	RP FRM0301	DRAWER FRAME - 21"	-	-	-	X	-	X	-	-	-
4A	RP FRM0302	DRAWER FRAME - 24"	-	X	-	X	-	X	-	-	-
4B	RP FRM0303	DRAWER FRAME - 27"	X	-	X	-	X	-	X	-	X
5*	IN GSK9903	DRAWER GASKET - 18.75"	-	-	-	X	-	X	-	-	-
5A*	IN GSK1041	DRAWER GASKET - 21.75"	-	X	-	X	-	X	-	-	-
5B*	IN GSK1046	DRAWER GASKET - 24.75"	X	-	X	-	X	-	X	-	X
6	RP TRK05SM	DRAWER TRACKS (1L & 1R)	X	X	X	X	X	X	X	X	X
7	HD HDL130	DRAWER HANDLE	X	X	X	X	X	X	X	X	X
8	HC BRG210	DRAWER BEARING	X	X	X	X	X	X	X	X	X
9*	FA SCW5002	DRAWER BEARING BOLT	X	X	X	X	X	X	X	X	X

* = NOT SHOWN

DRAWER ASSEMBLY

CALL FACTORY FOR REPLACEMENT PARTS: 888-994-7636

Parts List

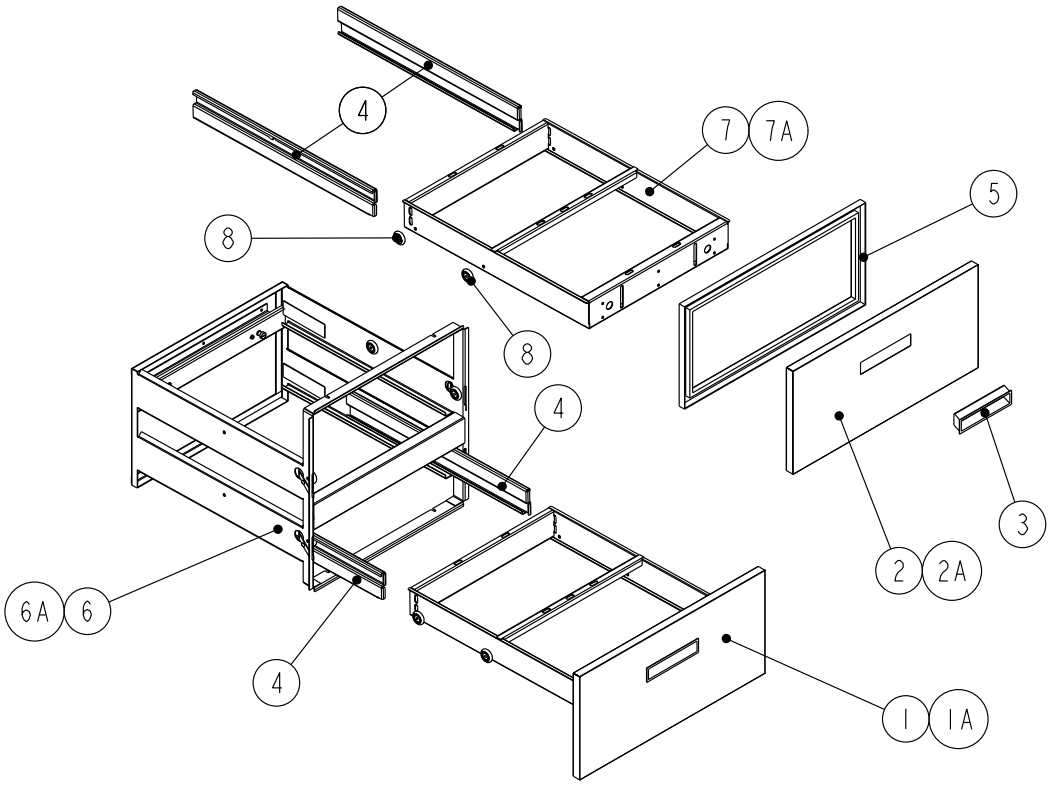

ITEM	SERVICE PART	DESCRIPTION	9148W-290	9260W-290	9272W-290
1	RP FRT0304	DRAWER FRONT - BOTTOM - 24"	-	X	-
1A	RP FRT0306	DRAWER FRONT - BOTTOM - 27"	X	-	X
2	RP FRT0303	DRAWER FRONT - TOP - 24"	-	X	-
2A	RP FRT0305	DRAWER FRONT - TOP - 27"	-	-	-
3	HD HDL0130	DRAWER HANDLE	X	X	X
4	RP TRK05SM	DRAWER TRACKS (1L & 1R)	X	X	X
5*	IN GSK1042	DRAWER GASKET - 24" Top	-	X	-
5A*	IN GSK1043	DRAWER GASKET - 24" Bottom	-	X	-
5B*	IN GSK1048	DRAWER GASKET - 27" Top	X	-	X
5C*	IN GSK1047	DRAWER GASKET - 27" Bottom	X	-	X
6	RP MOD1701A	DRAWER CARTRIDGE - 24"	-	X	-
6A	RP MOD1603A	DRAWER CARTRIDGE - 27"	X	-	X
7	RP FRM0103	DRAWER FRAME - 24"	-	X	-
7A	RP FRM127E	DRAWER FRAME - 27"	X	-	X
8	HD BRG210	DRAWER BEARING	X	X	X
9*	FA SCW5002	DRAWER BEARING BOLT	X	X	X
7	HD HDL130	DRAWER HANDLE	X	X	X
8	HC BRG210	DRAWER BEARING	X	X	X
9*	FA SCW5002	DRAWER BEARING BOLT	X	X	X

* = NOT SHOWN

DRAIN ASSEMBLY

CALL FACTORY FOR REPLACEMENT PARTS:
888-994-7636

Parts List

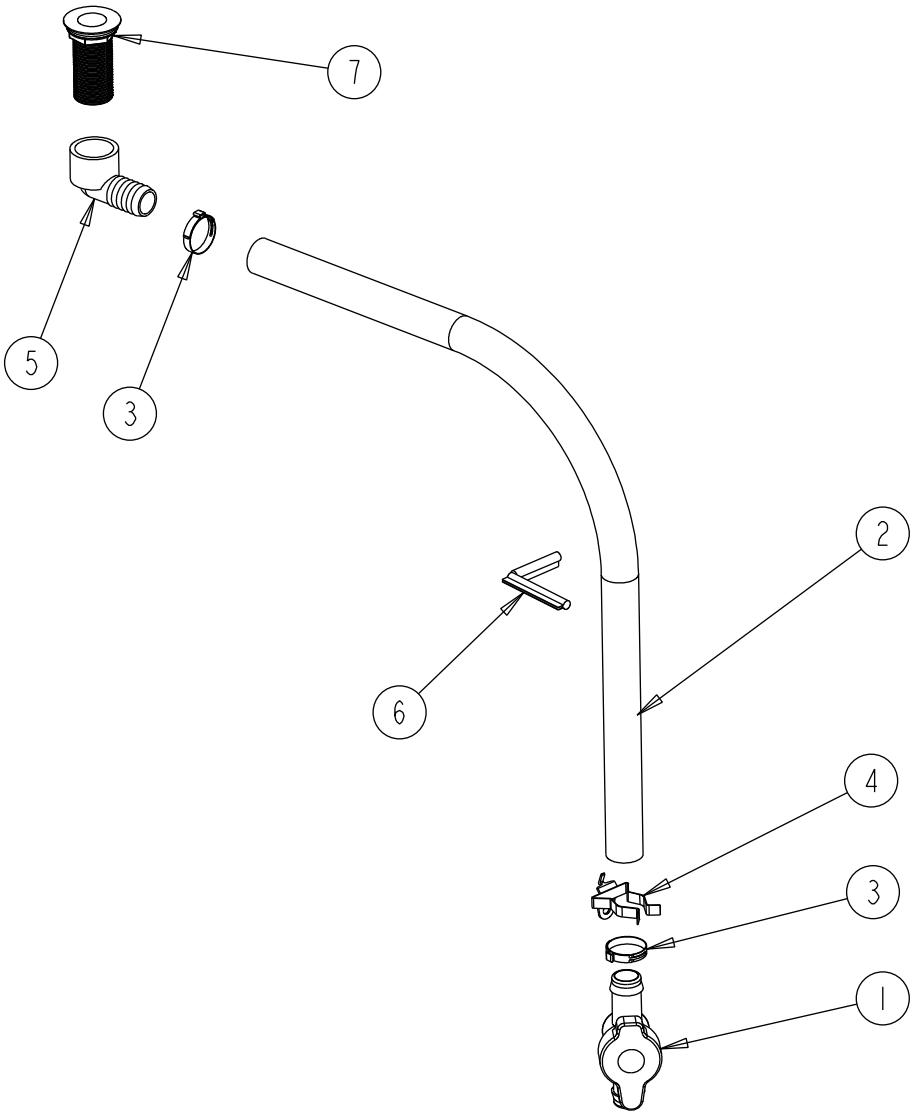

ITEM	SERVICE PART	DESCRIPTION	8148N-290	8260N-290	8268N-290	8383N-290	8395N-290	84111N-290	8148W-290	8268W-290	8395W-290	9148W-290	9260W-290	9272W-290
1	PB VLV1803	VALVE, GREEN BACK, 25 MM	X	X	X	X	X	X	X	X	X	X	X	X
2	PL TBG1801	TUBING, 1” VINYL, BLACK	X	X	X	X	X	X	X	X	X	X	X	X
3	HD CLM1801	CLAMP, 1-1/4” OETIKER	X	X	X	X	X	X	X	X	X	X	X	X
4	HD CLP1902	CLIP, SPRING, 1 TO 1-7/8 NICKEL PLATED STEEL	X	X	X	X	X	X	X	X	X	X	X	X
5	PB ELB1801	ELBOW, 90 DEG	X	X	X	X	X	X	X	X	X	X	X	X
6	EL GRM1801	GROMMET, PUSHON, DRAIN ASSY	X	X	X	X	X	X	X	X	X	X	X	X
7	HD DRN1702	DRAIN, ABS, GRAY, 1.375”, 1.00” NPS X 2.875” LG W/NUT & WASHER	X	X	X	X	X	X	X	X	X	X	X	X

* = NOT SHOWN

RAIL ASSEMBLY - NARROW HOOD COVER

CALL FACTORY FOR REPLACEMENT PARTS:
888-994-7636

Parts List

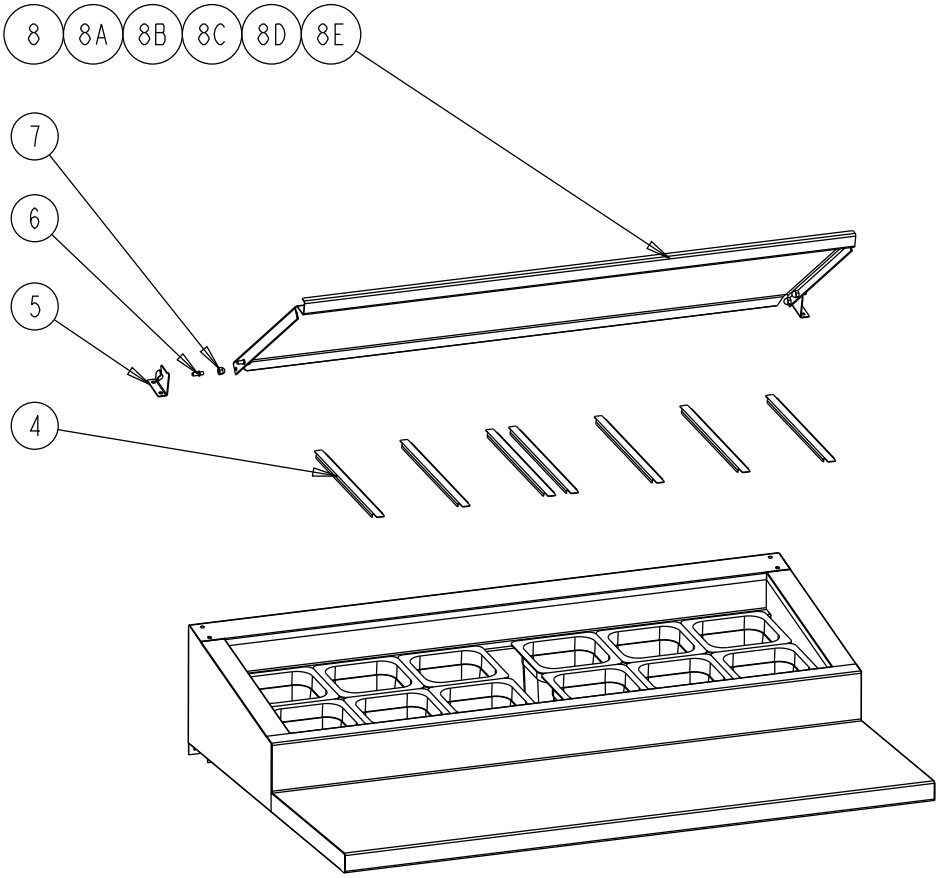

ITEM	SERVICE PART	DESCRIPTION	8148N-290	8260N-290	8268N-290	8383N-290	8395N-290	84111N-290
1*	HD PIN107	PIN, THREADED SOUTHCO	X	X	X	X	X	X
2*	HD PIN107I	INSERT, THREADED SOUTCHO	X	X	X	X	X	X
3*	HD PIN001	PIN, KEY PAN RAIL	X	X	X	X	X	X
4	RP DSN001	DRAIN SCREEN, 2"	X	X	X	X	X	X
5	RP HNG006	HINGE, PAN COVER SET OF 2	X	X	X	X	X	X
6	HD PIN0101	PIN, LOCATING 0.875 LENGTH	X	X	X	X	X	X
7	FA NUT0403SS	NUT, 1/4-20 CAP NUT 18-8 SS	X	X	X	X	X	X
8	RP PCR0115	COVER, HINGED PAN	X	-	-	-	-	-
8A	RC PCR0117	COVER, HINGED PAN	-	X	-	-	-	-
8B	RC PCR0118	COVER, HINGED PAN	-	-	X	-	-	-
8C	RC PCR0114	COVER, HINGED PAN	-	-	-	X	-	-
8D	RC PCR0115	COVER, HINGED PAN	-	-	-	-	X	-
8E	RC PCR0116	COVER, HINGED PAN	-	-	-	-	-	X

* = NOT SHOWN

RAIL ASSEMBLY - WIDE HOOD COVER

CALL FACTORY FOR REPLACEMENT PARTS:
888-994-7636

Parts List

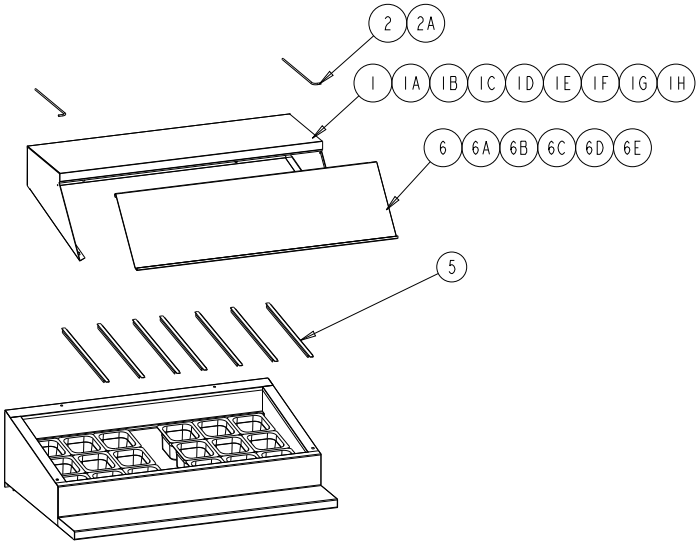

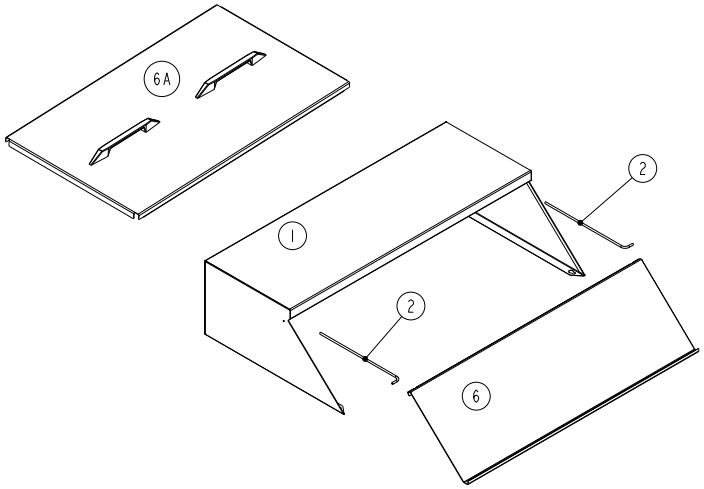

ITEM	SERVICE PART	DESCRIPTION	8148N-290	8260N-290	8268N-290	8383N-290	8395N-290	84111N-290	8148W-290	8268W-290	8395W-290	9148W-290	9260W-290	9272W-290
1	RP HOD0101	HOOD COVER	X	-	-	-	-	-	-	-	-	X	-	-
1A	RPHOD1801	HOOD COVER	-	-	-	-	-	-	X	-	-	-	X	-
1B	RP HOD0301	HOOD COVER	-	X	-	-	-	-	-	-	-	-	-	X
1C	RP HOD0202	HOOD COVER	-	-	X	-	-	-	-	-	-	-	-	-
1D	RP HOD1802	HOOD COVER	-	-	-	-	-	-	-	X	-	-	-	-
1E	RP HOD0407	HOOD COVER	-	-	-	X		-	-	-	-	-	-	-
1F	RP HOD0310	HOOD COVER	-	-	-	-	X	-	-	-	-	-	-	-
1G	RP HOD1803	HOOD COVER	-	-	-	-	-	-	-	-	X	-	-	-
1H	HP HOD0609	HOOD COVER	-	-	-	-	-	X	-	-	-	-	-	-
2	HD ROD100	HOOD COVER, ROD W/ SINGLE BEND	X	-	-	-	X	-	X	-	X	X	-	-
2A	HD ROD200	HOOD COVER, ROD W/ DOUBLE BEND	-	-	-	-	X	-	-	-	X	-	-	-
3*	HD PIN107	PIN, THREADED SOUTHCO	X	X	X	X	X	X	X	X	X	X	X	X
4*	HD PIN107I	INSERT, THREADED SOUTCHO	X	X	X	X	X	X	X	X	X	X	X	X
5*	RP DSN001	DRAIN SCREEN, 2"	X	X	X	X	X	X	X	X	X	X	X	X
6	RP LID048	COVER (IMAGE ON LEFT)	X	-	-	-	-	-	-	-	-	-	-	-
6	RP HNG017	SLIDE BACK COVER (IMAGE ON RIGHT)	-	-	-	-	-	-	-	-	-	X	X	X
6A	RP LID1502	COVER	-	X	-	-	-	-	-	-	-	-	X	-
6B	RP LID068	COVER	-	-	X	-	-	-	-	-	-	-	-	X
6C	RP LID083	COVER	-	-	-	X	-	-	-	-	-	-	-	-
6D	RP LID095	COVER	-	-	-	-	X	-	-	-	-	-	-	-
6E	RP LID111	COVER	-	-	-	-	-	X	-	-	-	-	-	-
6F	RP LID1801	COVER	-	-	-	-	-	-	X	-	-	-	-	-
6G	RP LID1802	COVER	-	-	-	-	-	-	-	X	-	-	-	-
6H	RP LID1803	COVER	-	-	-	-	-	-	-	-	X	-	-	-
7*	HD PIN001	PIN, KEY PAN RAIL	-	-	-	-	-	-	X	X	X	-	-	-

* = NOT SHOWN

8000-290
SINGLE COMPRESSOR
CAREL

Wiring Diagram

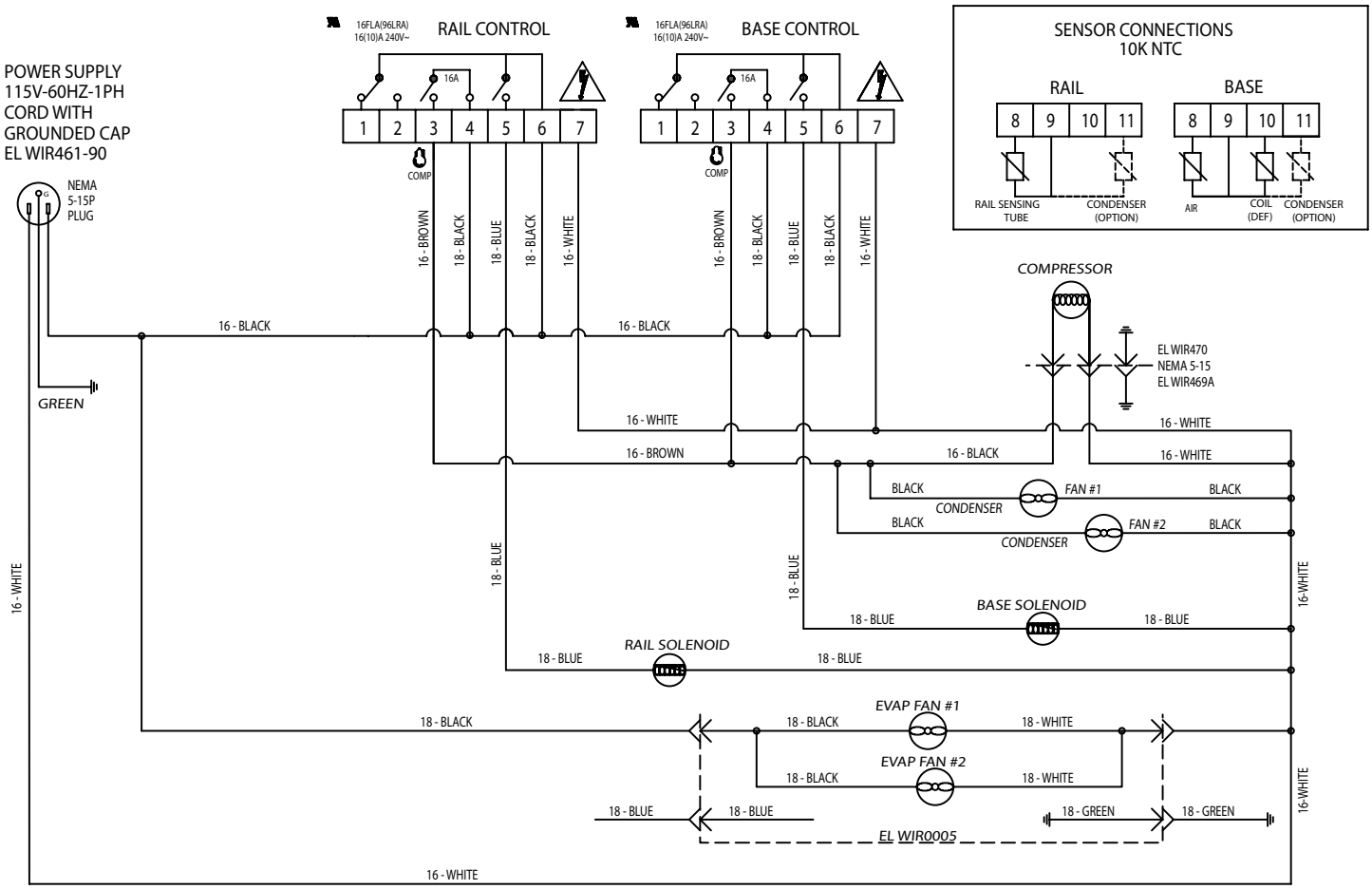

8000-290
DOUBLE COMPRESSOR
CAREL

Wiring Diagram

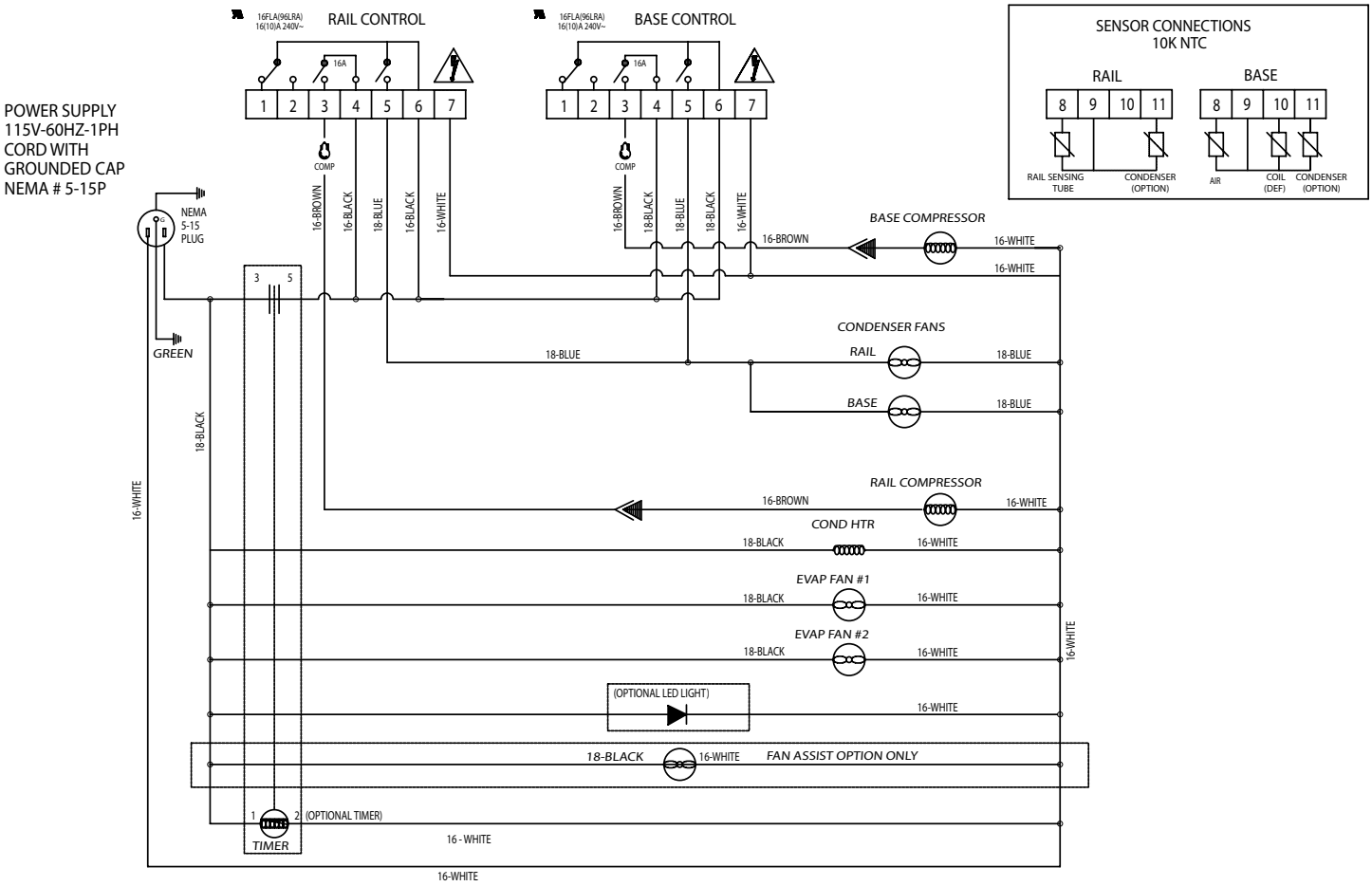

9000W-290
CAREL

Wiring Diagram

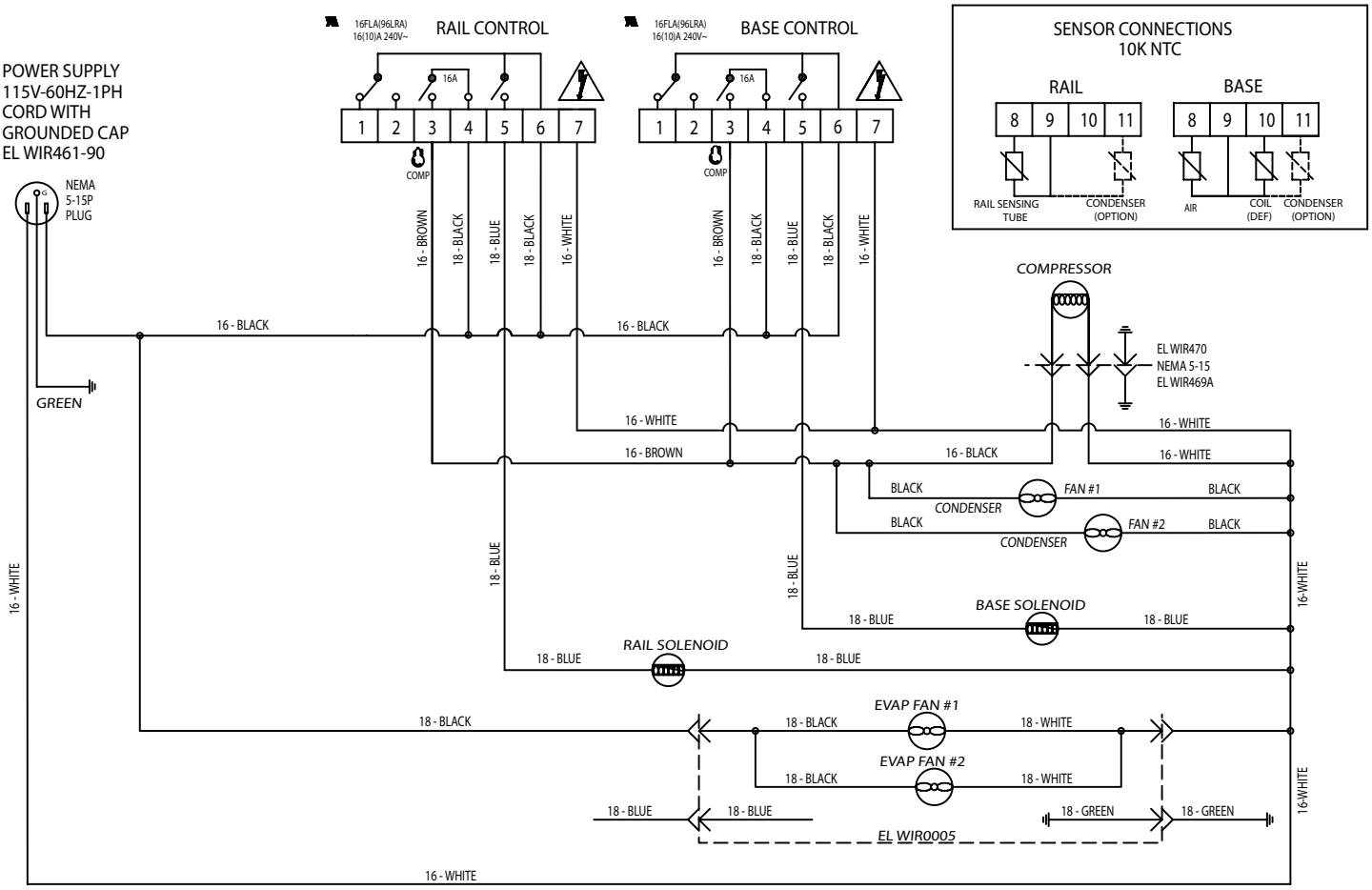

Wiring Diagram

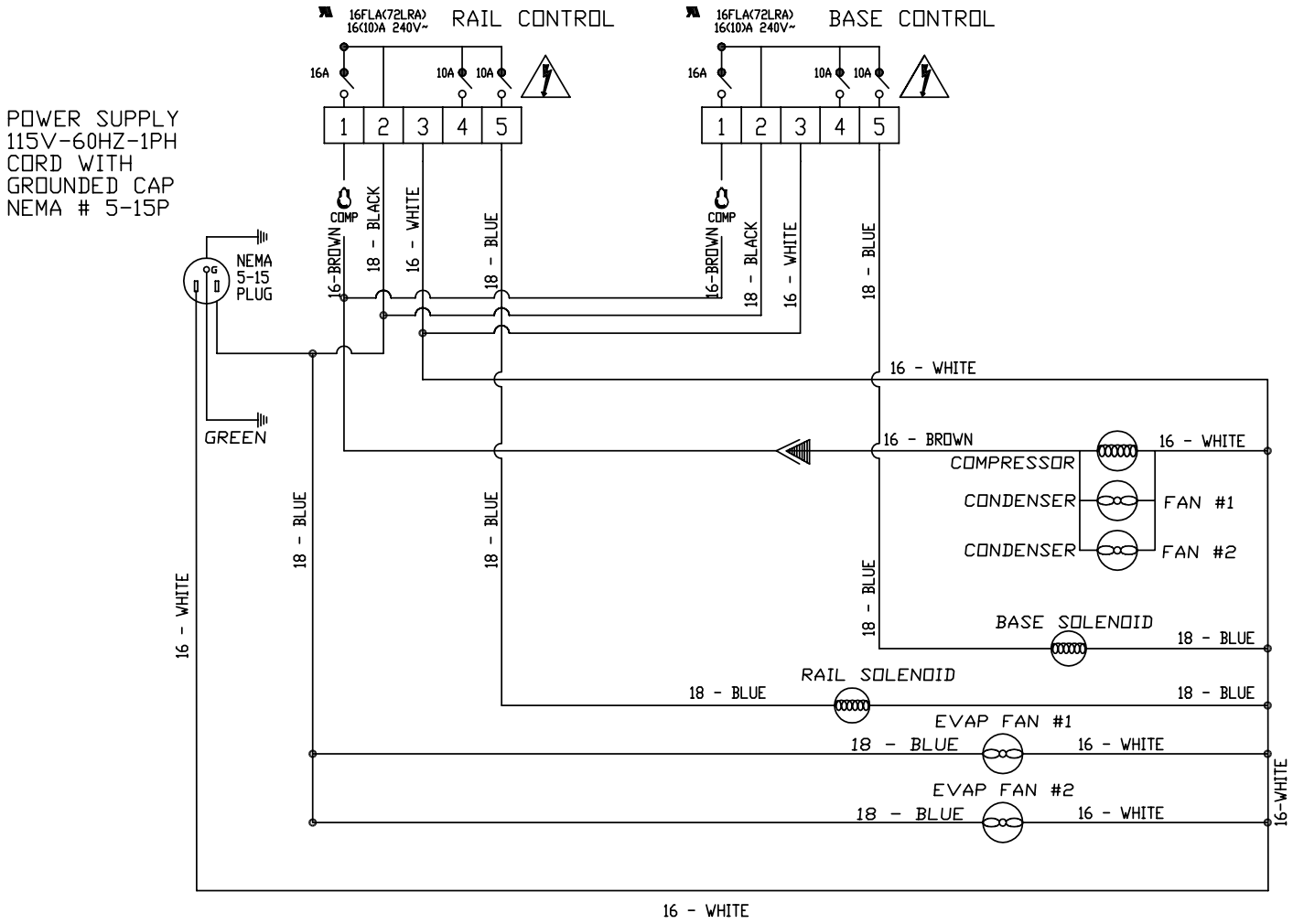

NOTE:
BLUE (EVAP COIL) = S2
BLACK (AIR) = S1

ELECTRICAL DIAGRAM
8000-290 SERIES - SINGLE CMPR
DANFOSS ERC112C CONTROL

Wiring Diagram

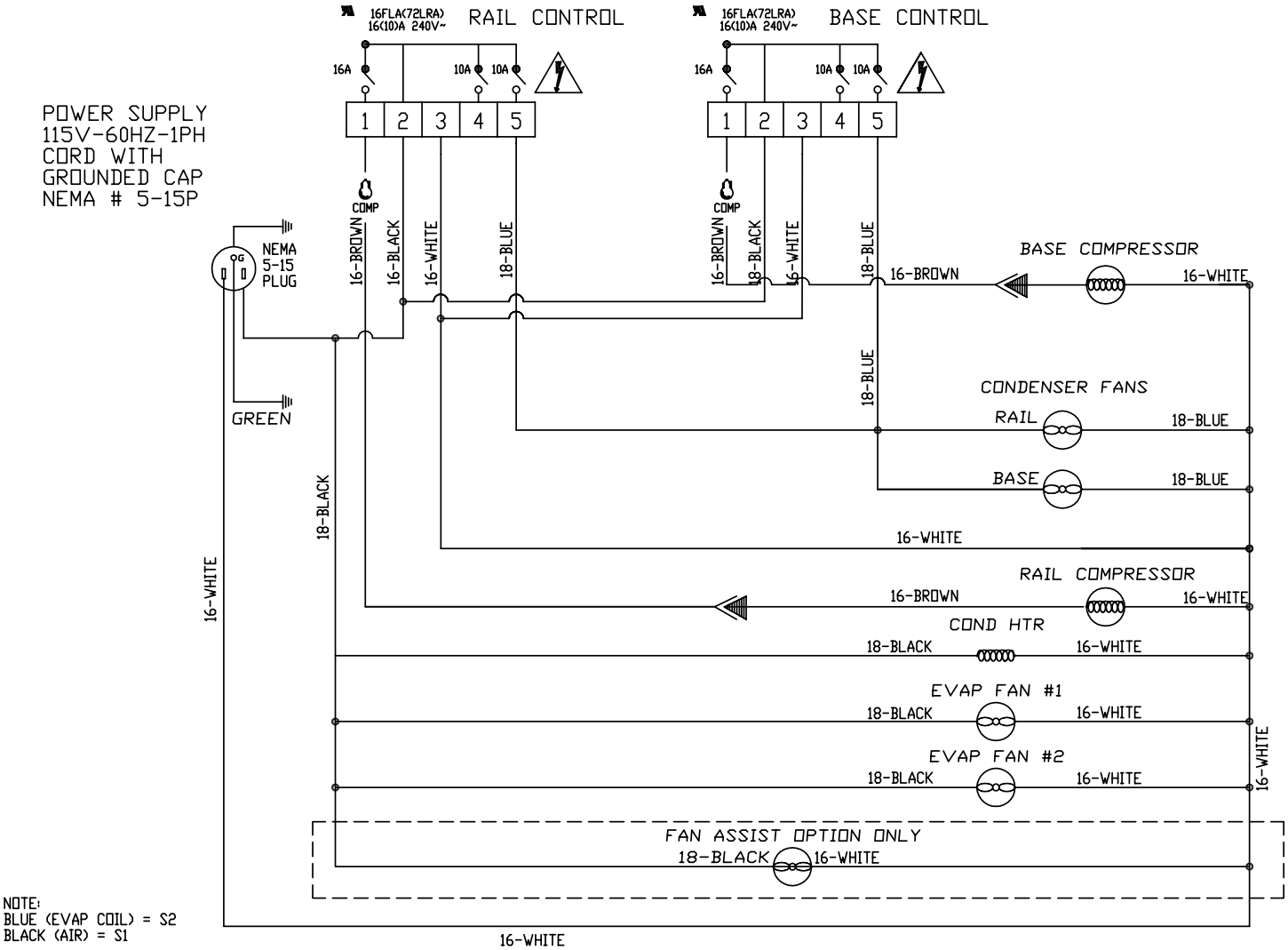

ELECTRICAL DIAGRAM
8000-290 SERIES - DOUBLE CMPR
DANFOSS ERC112C CONTROL

Wiring Diagram

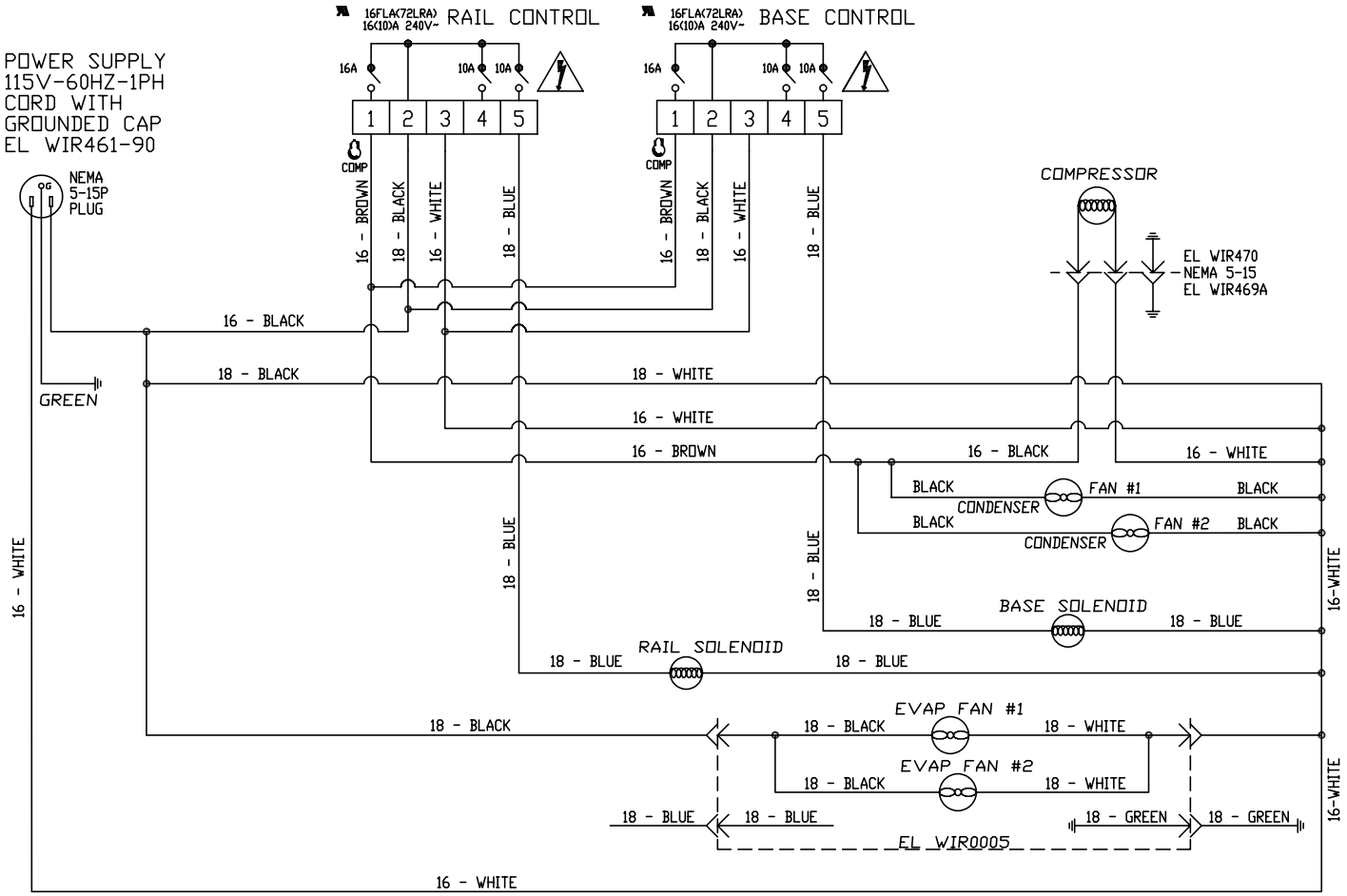

NOTE:
BLUE (EVAP COIL) = S2
BLACK (AIR) = S1

Service Log

Model No:	Purchased From:
Serial No:	Location:
Date Purchased:	Date Installed:
Purchase Order No:	For Service Call:

Date	Maintenance Performed	Performed By

Commercial Kitchen Equipment Parts

Find more Randell equipment resources at

parthubz.com/equipment/randell

Need parts or service?

Call 833-700-8006

support@parthubz.com

parthubz.com