Commercial Kitchen Equipment Parts

SCOTSMAN C0522

Scotsman C0522 service-manual

Provided by PartHubz

parthubz.com

833-700-8006 | support@parthubz.com

Scotsman Ice Systems

PRODIGY®

C0522 – 500 lb Cube Ice Machine

Prodigy® Modular Cube Ice Maker

Shown on B322S bin with optional KLP8S legs.

Features

Prodigy® cubers use significantly less energy and water than other cube ice machines, exceeding Federal energy efficiency regulations.

AutoAlert™ indicator lights constantly communicate about operating status and actually signal your staff when it's time to descale, sanitize, and more—making upkeep practically foolproof.

The patented WaterSense adaptive purge control delivers maximum reliability by reducing scale buildup for a longer time between cleanings.

Preventative maintenance is simpler than ever with easily-removed panels allowing clear access to internal components and a diagnostic code display insuring the right fix the first time. Reusable air filter is easily removable from the outside.

All external panel components are crafted for optimal aesthetic appeal through superior fit and finish.

An optional advanced feature Smart-Board™ provides NAFEM data protocol and additional operational data that can be displayed on-screen or transmitted remotely, resulting in early alert and fast diagnosis of operating issues.

An optional Vari-Smart™ ultrasonic ice level control sensor allows you flexibility to program ice levels, for up to 7 days, keeping just the right amount of freshly made ice in the bin.

24 Hour Volume Production

Air Cooled		
70˚F/21˚C 50˚F/10˚C lb/kg	Air Water	AHRI 90˚F/32˚C 70˚F/21˚C lb/kg
475/216		380/160

Water Cooled		
70˚F/21˚C 50˚F/10˚C lb/kg	Air Water	AHRI 90˚F/32˚C 70˚F/21˚C lb/kg
549/250		480/218

Modular Bin Options

Model Number	Dimensions W" x D" x H"	AHRI Certified Bin Capacity lb/kg	Application Capacity lb/kg	Finish	Ship Weight lb/kg
B322S	22 x 34 x 44	290/132	370/168	SS	140/64

Bin: B222S

Cube Ice

Small Cube
⅞" x ⅞" x ⅜"
(2.22 x 2.22 x .95 cm)

Medium Cube
⅞" x ⅞" x ⅞"
(2.22 x 2.22 x 2.22 cm)

Common ice form, ideal for mixed drinks.

Warranty

- 3 years parts and labor on all components.
- 5 years parts and labor on the evaporator.
- 5 years parts on the compressor and condenser.

Warranty valid in North, South & Central America.
Contact factory for warranty in other regions.

Scotsman Ice Systems · 775 Corporate Woods Parkway · Vernon Hills, IL 60061
1-800-SCOTSMAN
Fax: 847-913-9844
E-mail: customer.relations@scotsman-ice.com
www.scotsman-ice.com

C0522 – 500 lb Cube Ice Machine

C0522 – 500 lb Cube Ice Machine

Scotsman®
Ice Systems

Revit drawings available at
www.scotsman-ice.com

REVIT BY Scotsman Ice Systems

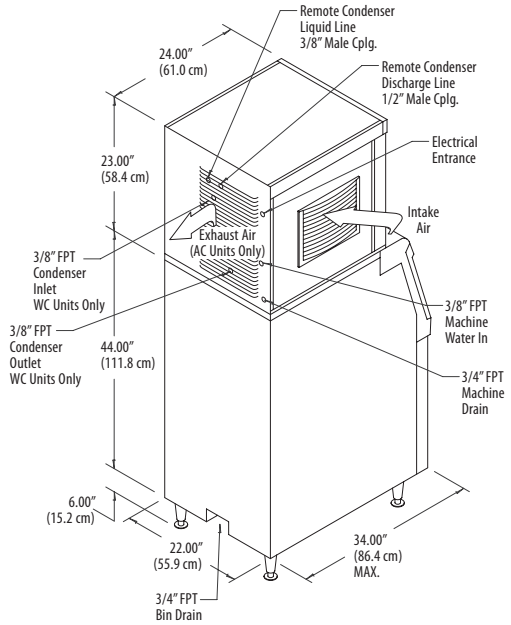

C0522 on B322 bin.

Installation Note: Allow 6" space at left, back and right side for ventilation and utility connections.

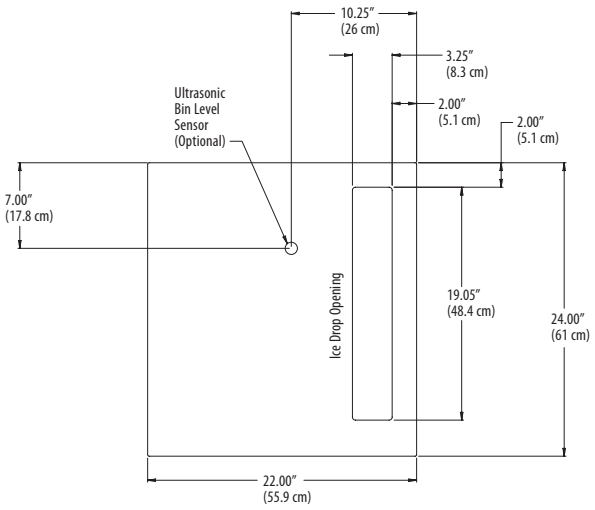

22" Prodigy plan view.

Specifications

	Model Number* Cube Size: medium or small	Condenser Unit	Basic Electrical Volts/Hz/Phase	Max. Fuse Size or HACR Circuit Breaker (amps)	Circuit Wires	Min. Circuit Ampacity	Energy Consumption kWh/100 lb (45.4 kg) 90˚F(32˚C)/70˚F(21˚C)	Water Usage Gallons/100 lb (liters/45.4 kg) Potable 90˚F(32˚C)/ 70˚F(21˚C)	Water Usage Gallons/100 lb (liters/45.4 kg) Condenser 90˚F(32˚C)/ 70˚F(21˚C)
med.	C0522MA-1	Air	115/60/1	15	2	13.8	6.7	18.5/70.2	-
	C0522MW-1	Water	115/60/1	15	2	12.2	4.7	18.4/69.7	160.0/605.7
sm.	C0522SA-1	Air	115/60/1	15	2	13.8	6.7	18.5/70.2	-
	C0522SW-1	Water	115/60/1	15	2	12.2	4.7	18.4/69.7	160.0/605.7

* 208-230/60/1 Voltage - Substitute "-32" in place of "-1", i.e. C0522SA-32A.

All Models

Dimensions (W x D x H):
Unit:
22" x 24" x 23"
(55.9 x 61.0 x 58.4 cm)
Shipping Carton:
25.5" x 27.5" x 28"
(64.8 x 69.9 x 71.1 cm)
Shipping Weight:
160 lb / 73 kg
BTUs per hour:
7,900

Accessories

Model Number	Description
KVS	Vari-Smart™ Ice Level Control - Program ice bin levels to match ice needs.
KSBU	Smart-Board™ Advanced Control - Use additional operational data for fast diagnosis.
KSBU-N	Smart-Board™ Advanced Control with Network - Network capable.
KPAS	Prodigy Advanced Sustainability Kit- Includes KVS and KSBU-N

* Scotsman recommends all ice machines have water filtration. See Scotsman Sanitation Matrix for details.

Operating Requirements

	Minimum	Maximum
Air Temperatures	50°F (10°C)	100°F (38°C)
Water Temperatures	40°F (4.4°C)	100°F (38°C)
Remote Cond. Temps	-20°F (-29°C)	120°F (49°C)
Water Pressures	20 PSIG (1.4 bar)	80 PSIG (5.5 bar)
Electrical Voltage	-10%	+10%

Specifications and design are subject to change without notice.

Scotsman Ice Systems · 775 Corporate Woods Parkway · Vernon Hills, IL 60061
1-800-SCOTSMAN
Fax: 847-913-9844
E-mail: customer.relations@scotsman-ice.com
www.scotsman-ice.com

© 2013 Scotsman Ice Systems.

Commercial Kitchen Equipment Parts

Find more Scotsman equipment resources at

parthubz.com/equipment/scotsman

Need parts or service?

Call 833-700-8006

support@parthubz.com

parthubz.com