Commercial Kitchen Equipment Parts

SCOTSMAN C1030

Scotsman C1030 document

Provided by PartHubz

parthubz.com

833-700-8006 | support@parthubz.com

Scotsman™

PRODIGY™ smart thinking

C1030 – 1000 lb Cube Ice Machine

C1030 – 1000 lb Cube Ice Machine

Prodigy™ Modular Cube Ice Maker

Shown on BH801S-A bin.

Features

Prodigy™ cubers use significantly less energy and water than other cube ice machines, exceeding pending California and Federal energy efficiency regulations.

Auto-Alert™ indicator lights constantly communicate about operating status and actually signal your staff when it's time to descale, sanitize, and more—making upkeep practically foolproof.

The patented WaterSense™ adaptive purge control delivers maximum reliability by reducing scale buildup for a longer time between cleanings.

Preventative maintenance is simpler than ever with easily-removed panels allowing clear access to internal components and a diagnostic code display insuring the right fix the first time. Reusable air filter is easily removable from the outside.

All external panel components are crafted for optimal aesthetic appeal through superior fit and finish.

An optional advanced feature SmartBoard™ provides NAFEM data protocol and additional operational data that can be displayed on-screen or transmitted remotely, resulting in early alert and fast diagnosis of operating issues.

An optional Vari-Smart™ ultrasonic ice level control sensor allows you flexibility to program ice levels, for up to 7 days, keeping just the right amount of freshly made ice in the bin.

24 Hour Volume Production

Air Cooled			Remote			Water Cooled		
70˚F/21˚C 50˚F/10˚C lb/kg	Air Water	ARI 90˚F/32˚C 70˚F/21˚C lb/kg	70˚F/21˚C 50˚F/10˚C lb/kg	Air Water	ARI 90˚F/32˚C 70˚F/21˚C lb/kg	70˚F/21˚C 50˚F/10˚C lb/kg	Air Water	ARI 90˚F/32˚C 70˚F/21˚C lb/kg
1077/490		844/384	996/453		851/387	1009/459		908/413

Modular Bin Options

* Stainless Steel with Galvanized Back & Bottom.

Model Number	Dimensions W" x D" x H"	ARI Certified Bin Capacity lb/kg	Application Capacity lb/kg	Finish	Ship Weight lb/kg
B842S	42 x 34 x 44	610/277	778/353	SS	185/84
B948S	48 x 34 x 44	700/319	893/406	SS	220/100
BH1100BB	48 x 34 x 50	860/390	1100/499	SS w/ GBB*	280/127
BH1100SS	48 x 34 x 50	860/390	1100/499	SS	280/127

Bin: BH1100SS

Cube Ice

Small Cube
⅞" x ⅞" x ⅜"
(2.22 x 2.22 x .95 cm)

Medium Cube
⅞" x ⅞" x ⅞"
(2.22 x 2.22 x 2.22 cm)

Common ice form, ideal for mixed drinks.

Warranty

- 3 years parts and labor on all components.
- 5 years parts and labor on the evaporator.
- 5 years parts on the compressor and condenser.

Warranty valid in North, South & Central America.
Contact factory for warranty in other regions.

Scotsman Ice Systems
775 Corporate Woods Parkway
Vernon Hills, IL 60061

1-800-SCOTSMAN
Fax: 847-913-9844
E-mail: customer.service@scotsman-ice.com

www.scotsman-ice.com

Scotsman™

The Smart Choice in Ice.™

C1030 – 1000 lb Cube Ice Machine

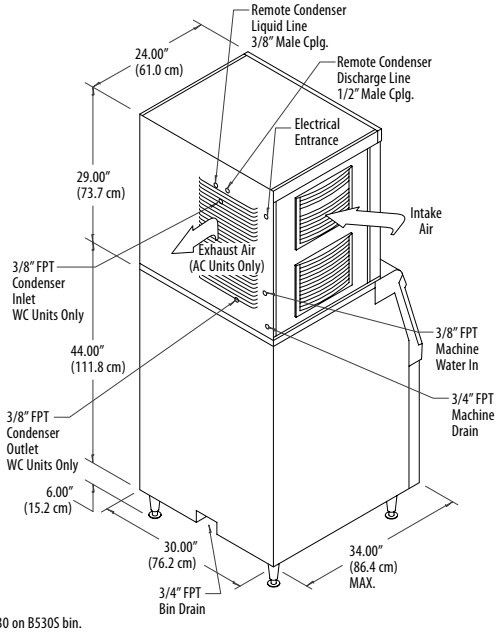

C1030 on B530S bin.

Installation Note: Allow 6" space at left, back and right side for ventilation and utility connections.

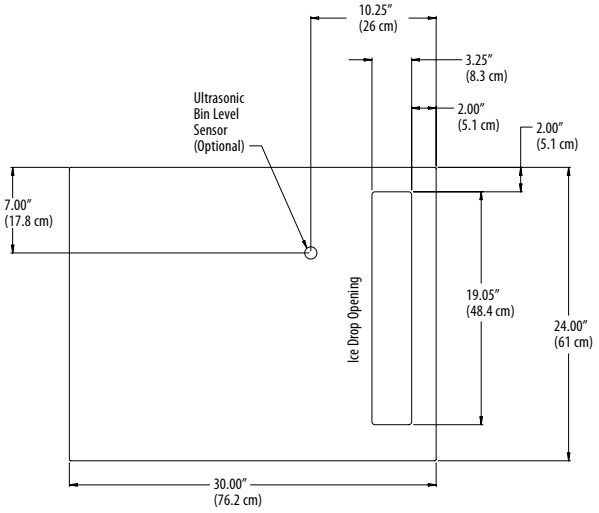

30" Prodigy plan view.

Specifications

	Model Number* Cube Size: medium or small	Condenser Unit	Basic Electrical Volts/Hz/Phase	Max. Fuse Size or HACR Circuit Breaker (amps)	Circuit Wires	Min. Circuit Ampacity	Energy Consumption kWh/100 lb (45.4 kg) 90˚F(32˚C)/70˚F(21˚C)	Water Usage Gallons/100 lb (liters/45.4 kg) Potable 90˚F(32˚C)/70˚F(21˚C)	Water Usage Gallons/100 lb (liters/45.4 kg) Condenser 90˚F(32˚C)/70˚F(21˚C)
med.	C1030MA-32A	Air	208-230/60/1	20	2	16.0	5.0	18.4/69.8	-
	C1030MR-32A	Remote	208-230/60/1	20	2	15.8	5.0	18.2/69.0	-
	C1030MW-32A	Water	208-230/60/1	15	2	14.8	4.0	19.7/74.7	153.0/580.1
sm.	C1030SA-32A	Air	208-230/60/1	20	2	16.0	5.0	18.4/69.8	-
	C1030SR-32A	Remote	208-230/60/1	20	2	15.8	5.0	18.2/69.0	-
	C1030SW-32A	Water	208-230/60/1	15	2	14.8	4.0	19.7/74.7	153.0/580.1

* 208-230/60/3 Voltage - Substitute "-3" in place of "-32", i.e. C1030SA-3A.

All Models

Dimensions (W x D x H):

Unit:
30" x 24" x 29"
(76.2 x 61.0 x 73.7 cm)

Shipping Carton:
33.5" x 27.5" x 34"
(85.1 x 69.9 x 86.4 cm)

Shipping Weight:
235 lb / 107 kg

BTUs per hour:
16,200

Accessories

Model Number	Description
KVS	Vari-Smart™ Ice Level Control - Program ice bin levels to match ice needs.
KSB	Smart-Board™ Advanced Control - Use additional operational data for fast diagnosis.
KSB-N	Smart-Board™ Advanced Control with Network - Network capable.
ERC311-32A	Remote Condenser for C1030xR, 208-230/60/1 - Consult Remote Condenser Spec Sheet for details.
RTE10	Line set, Precharged, R-404A, 10ft.
RTE25	Line set, Precharged, R-404A, 25ft.
RTE40	Line set, Precharged, R-404A, 40ft.
RTE75	Line set, Precharged, R-404A, 75ft.

* Scotsman recommends all ice machines have water filtration. See Scotsman Sanitation Matrix for details.

Operating Requirements

	Minimum	Maximum
Air Temperatures	50°F (10°C)	100°F (38°C)
Water Temperatures	40°F (4.4°C)	100°F (38°C)
Remote Cond. Temps	-20°F (-29°C)	120°F (49°C)
Water Pressures	20 PSIG (1.4 bar)	80 PSIG (5.5 bar)
Electrical Voltage	-5%	+10%

Specifications and design are subject to change without notice.

Scotsman Ice Systems
775 Corporate Woods Parkway
Vernon Hills, IL 60061

1-800-SCOTSMAN
Fax: 847-913-9844
E-mail: customer.service@scotsman-ice.com

www.scotsman-ice.com

© 2007 Scotsman Ice Systems.

Commercial Kitchen Equipment Parts

Find more Scotsman equipment resources at

parthubz.com/equipment/scotsman

Need parts or service?

Call 833-700-8006

support@parthubz.com

parthubz.com