Commercial Kitchen Equipment Parts

SCOTSMAN C1448

Scotsman C1448 document

Provided by PartHubz

parthubz.com

833-700-8006 | support@parthubz.com

Scotsman™

PRODIGY™ smart thinking

C1448 – 1400 lb Cube Ice Machine

C1448 – 1400 lb Cube Ice Machine

Prodigy Modular Cube Ice Maker

PRELIMINARY DRAFT

Shown on BH900S-C bin.

Features

Prodigy cubers use significantly less energy and water than other cube ice machines, exceeding pending California and Federal energy efficiency regulations.

Auto-Alert™ indicator lights constantly communicate about operating status and actually signal your staff when it's time to descale, sanitize, and more—making upkeep practically foolproof.

The patented WaterSense™ adaptive purge control delivers maximum reliability by reducing scale buildup for a longer time between cleanings.

Preventative maintenance is simpler than ever with easily-removed panels allowing clear access to internal components and a diagnostic code display insuring the right fix the first time. Reusable air filter is easily removable from the outside.

All external panel components are crafted for optimal aesthetic appeal through superior fit and finish.

An optional advanced feature SmartBoard™ provides NAFEM data protocol and additional operational data that can be displayed on-screen or transmitted remotely, resulting in early alert and fast diagnosis of operating issues.

An optional Vari-Smart™ ultrasonic ice level control sensor allows you flexibility to program ice levels, for up to 7 days, keeping just the right amount of freshly made ice in the bin.

24 Hour Volume Production

Air-Cooled			Water-Cooled			Remote		
70˚F/21˚C 50˚F/10˚C lb/kg	Air	ARI 90˚F/32˚C 70˚F/21˚C lb/kg	70˚F/21˚C 50˚F/10˚C lb/kg	Air	ARI 90˚F/32˚C 70˚F/21˚C lb/kg	70˚F/21˚C 50˚F/10˚C lb/kg	Air	ARI 90˚F/32˚C 70˚F/21˚C lb/kg
1613/732		1126/511	1566/710		1365/619	1597/724		1201/545

Modular Bin Options

* Stainless Steel with Galvanized Back & Bottom.

Model Number	Dimensions W" x D" x H"	ARI Certified Bin Capacity lb/kg	Application Capacity lb/kg	Finish	Ship Weight lb/kg
B948S	48 x 34 x 44	700/319	893/406	SS	220/100
BH900S-C	48 x 35 x 44	740/336	940/426	SS	200/91
BH1100BB	48 x 34 x 50	860/390	1100/499	SS w/ GBB*	280/127
BH1100SS	48 x 34 x 50	860/390	1100/499	SS	280/127
BH1300BB	60 x 34 x 50	1100/499	1400/635	SS w/ GBB*	310/140
BH1300SS	60 x 34 x 50	1100/499	1400/635	SS	310/140

Bin: BH1100SS

Bin: BH900S

Cube Sizes

Small Cube
7/8" x 7/8" x 3/8"
(2.22 x 2.22 x .95 cm)

Medium Cube
7/8" x 7/8" x 7/8"
(2.22 x 2.22 x 2.22 cm)

Warranty

- 3 years parts and labor on all components.
- 5 years parts and labor on the evaporator.
- 5 years parts on the compressor and condenser.

Warranty valid in North, South & Central America.
Contact factory for warranty in other regions.

Scotsman Ice Systems
775 Corporate Woods Parkway
Vernon Hills, IL 60061

1-800-SCOTSMAN
Fax: 847-913-9844
E-mail: customer.service@scotsman-ice.com

www.scotsman-ice.com

Enodis

Scotsman™
The Smart Choice in Ice.™

C1448 – 1400 lb Cube Ice Machine

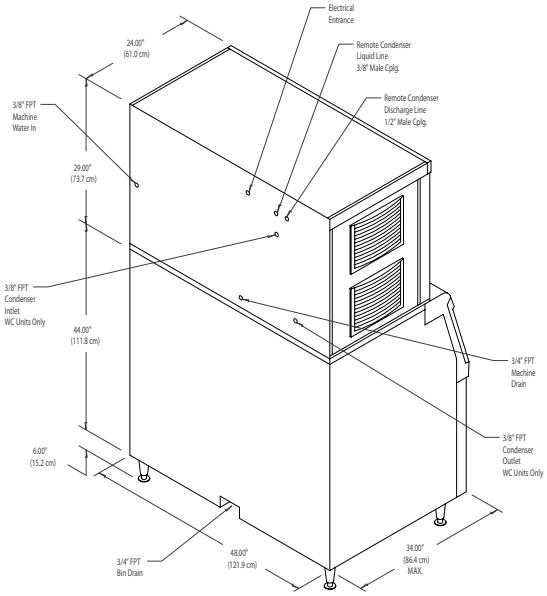

C1448 on B948S bin.

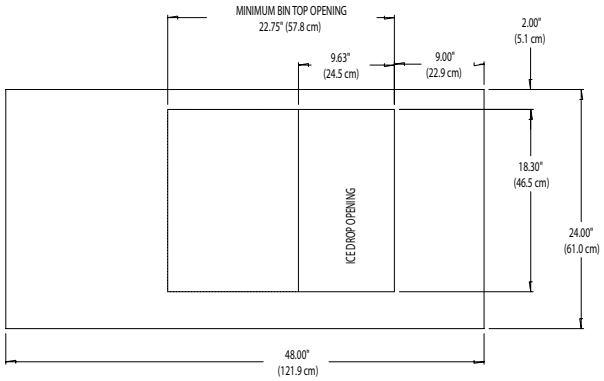

48" Prodigy plan view.

Specifications

	Model Number* Cube Size: medium or small	Condenser Unit	Basic Electrical Volts/Hz/Phase	Max. Fuse Size or HACR Circuit Breaker (amps)	Circuit Wires	Min. Circuit Ampacity	Power Consumption kWh/100 lb (45.4 kg) 90˚F(32˚C)/70˚F(21˚C)	Water Usage Gallons/100 lb (45.4 kg) Potable 90˚F(32˚C)/ 70˚F(21˚C)	Condenser 90˚F(32˚C)/ 70˚F(21˚C)
med.	C1448MA-32A	Air	208-230/60/1	30	2	17.7	4.8	18.4	-
	C1448MR-32A	Remote	208-230/60/1	30	2	16.0	4.9	18.6	-
	C1448MW-32A	Water	208-230/60/1	30	2	17.0	3.7	18.3	124.0
sm.	C1448SA-32A	Air	208-230/60/1	30	2	17.7	4.8	18.4	-
	C1448SR-32A	Remote	208-230/60/1	30	2	16.0	4.9	18.6	-
	C1448SW-32A	Water	208-230/60/1	30	2	17.0	3.7	18.3	124.0

* 208-230/60/3 Voltage - Substitute "-3" in place of "-32", i.e. C1448SA-3A.

All Models

Dimensions (W x D x H):
Unit: 48" x 24" x 29"
(121.9 x 70.0 x 73.7 cm)
Shipping Carton: 51.5" x 27.5" x 34"
(130.8 x 69.9 x 86.4 cm)

Shipping Weight - 345 lb / 157 kg
BTU's per hour - 12,000

Accessories

Model Number	Description
KVS	Vari-Smart™ Ice Level Control - Program ice bin levels to match ice needs.
KSB	Smart-Board™ - Use additional operational data for fast diagnosis.
ERC311-32A	Remote Condenser for C1448xR, 208-230/60/1 - Consult Remote Condenser Spec Sheet for details.
RTE10	Line set, Precharged, R-404A, 10 ft.
RTE25	Line set, Precharged, R-404A, 25 ft.
RTE40	Line set, Precharged, R-404A, 40 ft.
RTE75	Line set, Precharged, R-404A, 75 ft.

* Scotsman recommends all ice machines have water filtration. See Scotsman Sanitation Matrix for details.

Operating Requirements

	Minimum	Maximum
Air Temperatures	50˚F (10˚C)	100˚F (38˚C)
Water Temperatures	40˚F (4.4˚C)	100˚F (38˚C)
Remote Cond. Temps	-20˚F (-29˚C)	120˚F (49˚C)
Water Pressures	20 PSIG (1.4 bar)	120 PSIG (8.3 bar)
Electrical Voltage	-5%	+10%

Scotsman Ice Systems
775 Corporate Woods Parkway
Vernon Hills, IL 60061

1-800-SCOTSMAN
Fax: 847-913-9844
E-mail: customer.service@scotsman-ice.com

www.scotsman-ice.com

Enodis

© 2006 Scotsman Ice Systems.

Commercial Kitchen Equipment Parts

Find more Scotsman equipment resources at

parthubz.com/equipment/scotsman

Need parts or service?

Call 833-700-8006

support@parthubz.com

parthubz.com