Commercial Kitchen Equipment Parts

SCOTSMAN C1448

Scotsman C1448 User Manual

Provided by PartHubz

parthubz.com

833-700-8006 | support@parthubz.com

Scotsman®
Ice Systems

Installation and User's Manual for Modular Cuber

Prodigy Plus D Series Models C1448, C1848

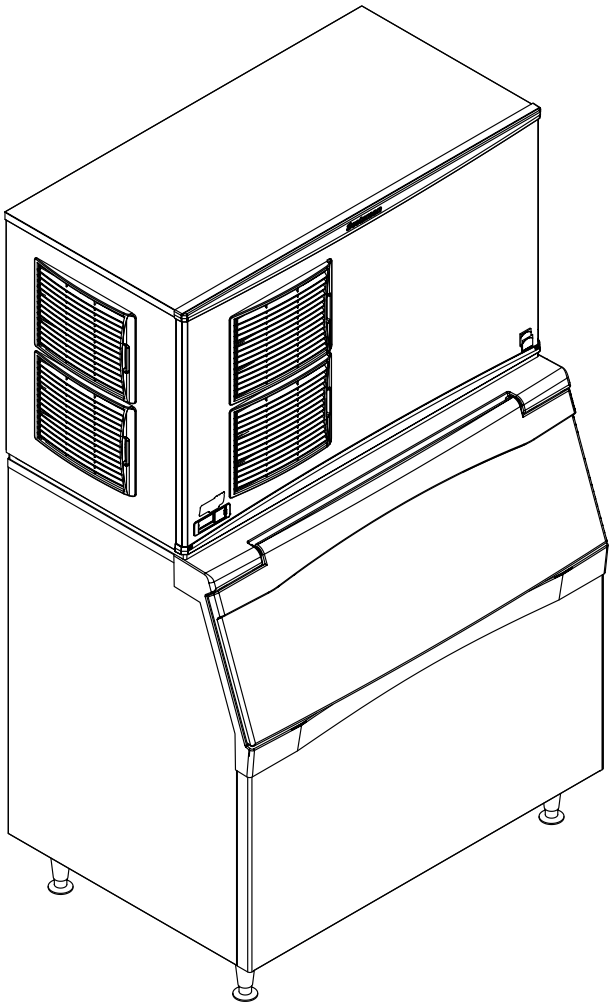

C1448, C1848 D
Air and Water Cooled User Manual
Introduction

The design of this modular cuber is the result of years of experience and testing. Standard features include front accessible indicator lights and on-off switches that provide the user with fast access to critical information and easy operational control.

When desired, optional controls can add features like ultrasonic bin ice level sensing, seven day programmable bin ice level setting, remote lock out and more.

This installation and user manual is divided into three main sections: Installation, which provides the trade person with the information needed to set up and install this product; Use and Operation, which provides the user with the information to use the product; and Maintenance, which provides the user with the information needed keep it operating efficiently.

Contents

Installation: Product Specifications . . . . . Page 2

Product Information . . . . . Page 3

Product Description & Electrical Requirements . . . . . Page 4

Cabinet Layout, Air and Water Cooled . . . . . Page 5

Water . . . . . Page 6

Panel Removal . . . . . Page 7

Uncrate and Set Up . . . . . Page 8

Plumbing Requirements . . . . . Page 9

Drains . . . . . Page 10

Electrical . . . . . Page 11

Initial Start Up . . . . . Page 12

Adjustments . . . . . Page 13

Water flush setting . . . . . Page 14

Use and Operation . . . . . Page 15

Switches . . . . . Page 16

Cleaning, Sanitation and Maintenance . . . . . Page 17

Air cooled condenser filter . . . . . Page 19

What to do before calling for service . . . . . Page 20

Installation: Product Specifications

Location Limitations: The product is designed to be installed indoors, in a controlled environment. Air cooled models discharge very warm air into the room out the back. Space must be allowed at the left side and back for air intake and discharge.

Water cooled models discharge warm water into the building's drain. Space needs to be provided on both sides and above for service access.

Space Limitations - Affects Ice Making Capacity

Note: Although the machine will function, ice capacity of air cooled machines will be significantly reduced with minimal clearance at the sides, back and top. Some space is recommended for service and maintenance purposes on all models.

6" of space at the sides and back are required for adequate operation. To get the most capacity, locate the machine away from heat producing appliances and heating ducts. **Provide several feet of space to the left for maximum ice capacity.**

Walls or other large machines near to the ice machine might also cause a reduction in ice capacity. One foot behind and two feet above will be required to make rated capacity.

Airflow is in the front, in the left side, out the back (as viewed from the front).

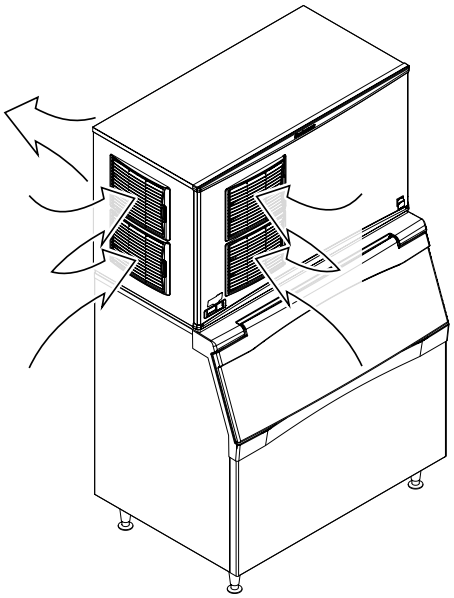

Airflow

Environmental Limitations

	Minimum	Maximum
Air temperature	50°F.	100°F.
Water temperature	40°F.	100°F.
Water pressure	20 psi	80 psi

Power supply – acceptable voltage ranges

	Minimum	Maximum
208-230 volt model	198 volts	253 volts

Warranty Information

The warranty statement for this product is provided separately from this manual. Refer to it for applicable coverage. In general warranty covers defects in material or workmanship. It does not cover maintenance, corrections to installations, or situations when the machine is operated in circumstances that exceed the limitations printed above

Product Information

The product is a modular cuber. That type of machine is designed to be placed on an ice storage bin or an ice dispenser. Many installations only require the matching bin, but some also require an adapter to be placed between the bin and the cuber or between the dispenser and the cuber.

This product cannot be stacked. See the chart for application information.

Model Number Description

Example:

- C1448SA-32D
- C= cuber
- 14= nominal ice capacity in 100s of pounds
- 48= nominal width of cabinet
- S= Cube size. S=small or half dice cube.
- M=medium or full dice cube
- A=Condenser type. A=air cooled. W=water cooled
- -32=Electrical code. -32=208-230 single phase. -3=208-230 three phase
- D=Series revision code. D=4th series

Note: In some areas of this manual model numbers may include only the first five characters of the model number, meaning that the cube size, condenser type and voltage differences are not critical to the information listed there.

Options:

There are several field-installed options that can be installed at initial start up or later. They include: • KVS - Vari-Smart adjustable ice level system.

• KSBU - Smart-Board advanced feature control.

• A39515-021 air baffle to reduce air recirculation around the back of the cabinet when installed in a corner.

Some installations require bin adapters. See the table below.

Standard Bin Applications - Adapter information.

Model	BH900, B948S	BH1100, BH1300, BH1600
C1448, C1848,	Direct Fit, no adapter needed	No adapter needed

Other Bins & Applications:

Note the drop zone and ultrasonic sensor locations in the illustrations.

Scotsman ice systems are designed and manufactured with the highest regard for safety and performance. They meet or exceed the standards of UL and NSF.

Scotsman assumes no liability of responsibility of any kind for products manufactured by Scotsman that have been altered in any way, including the use of any part and/or other components not specifically approved by Scotsman.

Scotsman reserves the right to make design changes and/or improvements at any time. Specifications and design are subject to change without notice.

Product Description & Electrical Requirements

Dimensions w” x d” x h”	Model	Electrical	Condenser	Minimum Circuit Ampacity	Suggested Fuse Size	Maximum Fuse Size*
48 x 24 x 29	C1448SA-32	208-230/60/1	Air	17.7	20	30
same	C1448SW-32	208-230/60/1	Water	16.0	20	30
same	C1448SA-3	208-230/60/3	Air	13.6	20	30
same	C1448MA-32	208-230/60/1	Air	17.7	20	30
same	C1448MW-3	208-230/60/3	Water	11.9	15	30
same	C1848SA-32	208-230/60/1	Air	25.5	30	30
same	C1848SW-32	208-230/60/1	Water	23.8	30	30
same	C1848MA-32	208-230/60/1	Air	25.5	30	30

Table notes: Series revision code omitted.

* Or HACR type circuit breakers.

This manual covers several models. The model number on the product is located in two places, on the back dataplate and on the model and serial number tag, located behind the front panel.

Write the model and serial number of this product here:

_____

Cabinet Layout, Air and Water Cooled

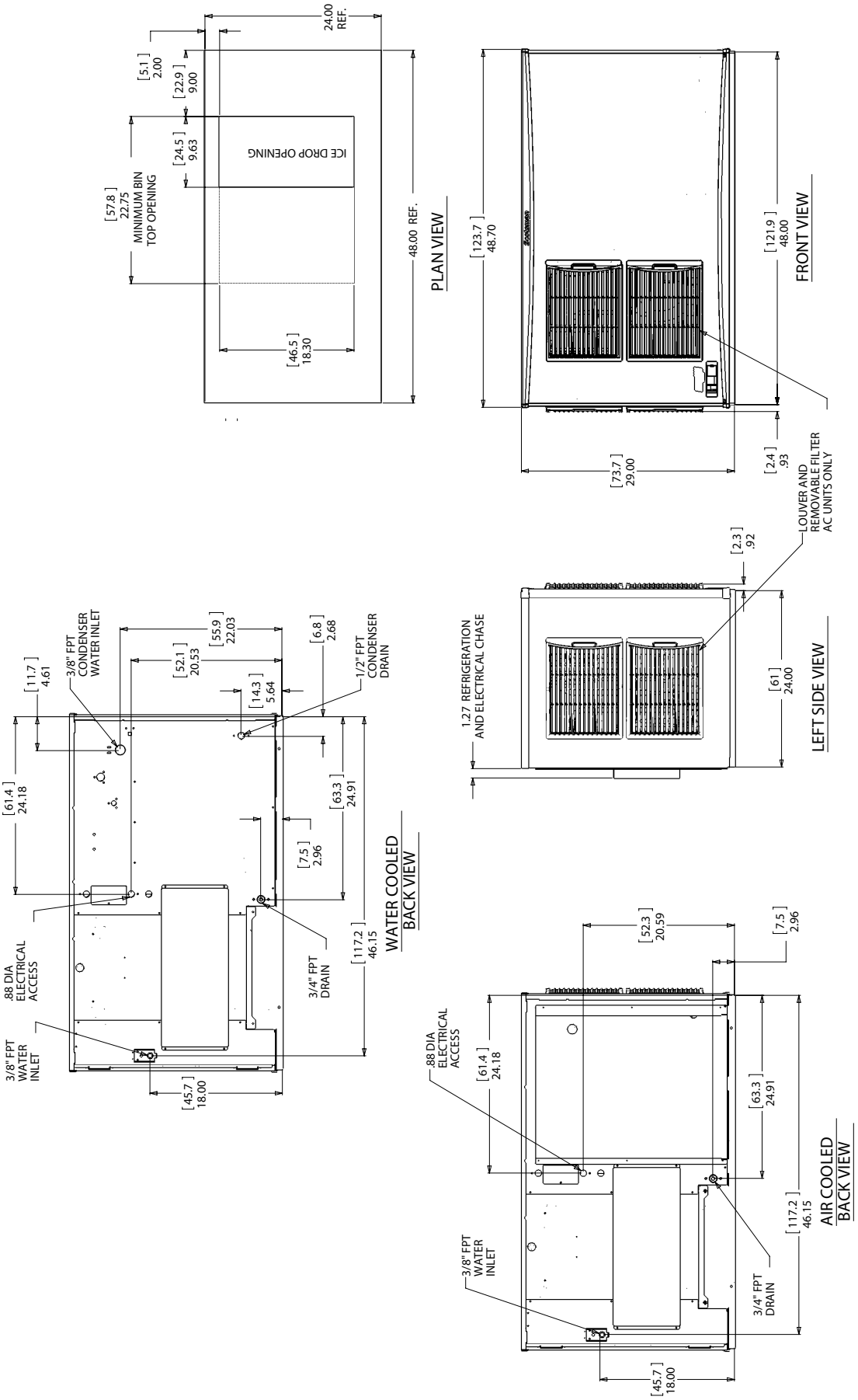

Water

The quality of the water supplied to the ice machine will have an impact on the time between cleanings and ultimately on the life of the product. There are two ways water can contain impurities: in suspension or in solution. Suspended solids can be filtered out. In solution or dissolved solids cannot be filtered, they must be diluted or treated. Water filters are recommended to remove suspended solids. Some filters have treatment in them for suspended solids. Check with a water treatment service for a recommendation.

Scotsman filters:

A triple head filter is recommended for the potable water. Either the Scotsman SSM3 taste and odor filter system, or the ADS-AP3 Aqua Patrol system. RO water. This machine can be supplied with Reverse Osmosis water, but the water conductivity must be no less than 10 microSiemens/cm.

Condenser Water Supply - filtration not recommended for this water supply

	GPH, 70 degree water
C1448W	70
C1848W	106

Potential for Airborne Contamination

Installing an ice machine near a source of yeast or similar material can result in the need for more frequent sanitation cleanings due to the tendency of these materials to contaminate the machine.

Most water filters remove chlorine from the water supply to the machine which contributes to this situation. Testing has shown that using a filter that does not remove chlorine, such as the Scotsman Aqua Patrol, will greatly improve this situation, while the ice making process itself will remove the chlorine from the ice, resulting in no taste or odor impact. Additionally, devices intended to enhance ice machine sanitation, such as the Scotsman Aqua Bullet, can be placed in the machine to keep it cleaner between manual cleanings

Water Flush

Cube ice machines use more water than what ends up in the bin as ice. While most water is used during ice making, a portion is designed to be drained out every cycle to reduce the amount of hard water scale in the machine. That’s known as water flush, and an effective flush can increase the time between needed water system cleaning.

In addition, this product is designed to automatically vary the amount of water flushed based on the purity of the water supplied to it. The water flush rate can also be set manually.

Adjustments of flush due to local water conditions are not covered by warranty.

Panel Removal

1. Locate and loosen the two screws at the bottom edge of the front panel.
2. Pull the front panel out at the bottom.
3. Lower the front panel down and off the machine.
4. Remove two screws at front edge of top panel.
5. Lift up the front of the top panel, push it back an inch, then lift to remove.
6. Locate and loosen the screws holding each side panel to the base.
7. Pull the side panel forward to release it from the back panel.

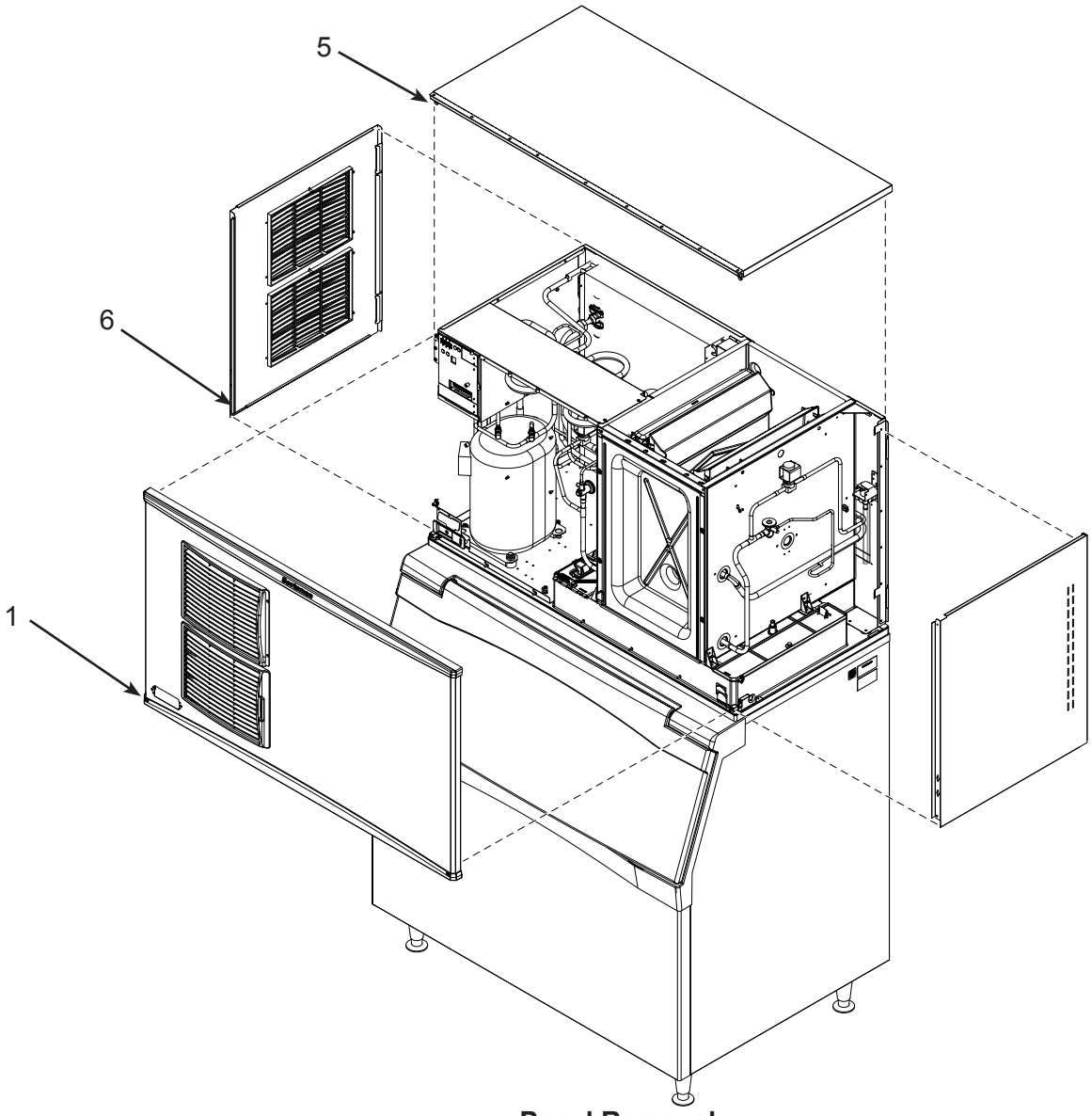

Panel Removal

Uncrate and Set Up

Begin with unpacking the ice storage bin. Remove the carton, and using part of the carton as a cushion, tip the bin on its back to remove the skid and attach the legs or casters.

Note: Turn the leg levelers in all the way and adjust after the ice machine is on top and in its selected location.

Return the bin to an upright position. Check the bin top gasket for gaps and tears, fill any in with food grade sealant prior to placing the ice machine on the bin.

Install the bin top adapter if one is required for the application.

If the ice machine has not been unpacked, do so now. Remove the carton from the skid. Lift the ice machine off the skid directly onto the bin.

Note: The machine is heavy! Use a mechanical hoist if necessary.

Secure the ice machine to the bin with the hardware provided (two metal straps and 4 bolts).

Level the bin and ice machine using the adjustment part of the legs.

Bin Recycling

Many times an ice machine head will be replaced, while the existing ice storage bin will be reused. This is an acceptable practice, if some precautions are taken:

- The used bin must be in good condition. Broken doors, hinges, or warped walls are reason for considering a new bin.
- The used bin top edge gasket must be replaced. Water leaks could occur if the gasket tape is not replaced.
- The used bin should be the proper size for the ice machine head.

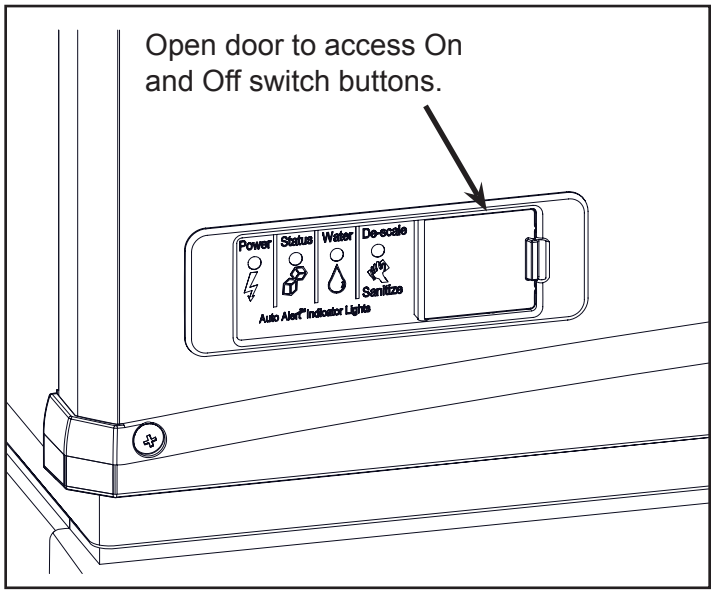

Lower Light and Switch Panel

This user accessible panel provides important operational information and duplicates the lights and switches on the controller. It also allows access to the On and Off buttons that operate the ice machine.

Sometimes access to the switches should be limited to prevent unauthorized operation. For that purpose a fixed panel is shipped in the hardware package. The fixed panel cannot be opened.

To install the fixed panel:

1. Remove the front panel and remove the bezel.
2. Spread the bezel frame open and remove original door, insert fixed panel into bezel. Be sure it is in the closed position.
3. Return bezel to panel and install panel on unit.

Plumbing Requirements

All models require connection to cold, potable water. A hand actuated valve within site of the machine is required. Air cooled models have a single 3/8” FPT inlet water connection.

Water cooled models have a 1/2" FPT drain fitting plus an additional 3/8” FPT condenser inlet water connection.

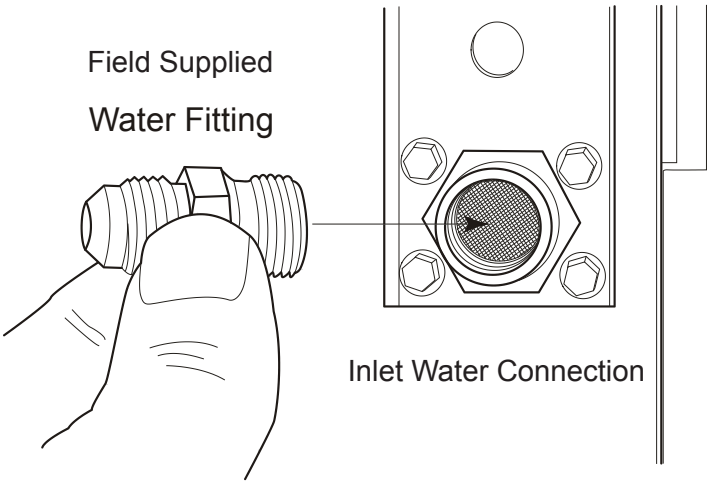

Water Filters

If connecting to water filtration, filter only the water to the reservoir, not to the condenser. Install new cartridges if the filters were used with a prior machine.

A triple head filter is recommended. Either the Scotsman SSM3 taste and odor filter system, or the ADS-AP3 Aqua Patrol system.

Drains

All models require drain tubing to be attached to them. Air cooled models have a single ¾” FPT drain fitting in the back of the cabinet. Water cooled models have the same fitting plus an additional ½” FPT drain fitting in the back of the cabinet. Install new tubing when replacing a prior ice machine, as the tubing will have been sized for the old model and might not be correct for this one.

1. Connect water supply to water inlet fittings.

Note: This NSF listed model has a 1" anti-back flow air gap between the end of the water inlet tube and the highest possible reservoir water level, no additional back flow device is required for the potable water inlet.

2. Connect drain tubing to drain fittings.
3. Route the drain tubing to building drain. Follow local codes for air gap.

Use rigid drain tubes and then route them separately – do not Tee into the bin’s drain or, if water cooled, Tee the condenser drain into the reservoir or bin drain.

Vent the reservoir drain. A vertical vent at the back of the drain, extended about 8 – 10” will allow the gravity drain to empty and also keep any surges during draining from discharging water.

Horizontal runs of drain tubing need a ¼” per fall per foot of run for proper draining. Follow all applicable codes.

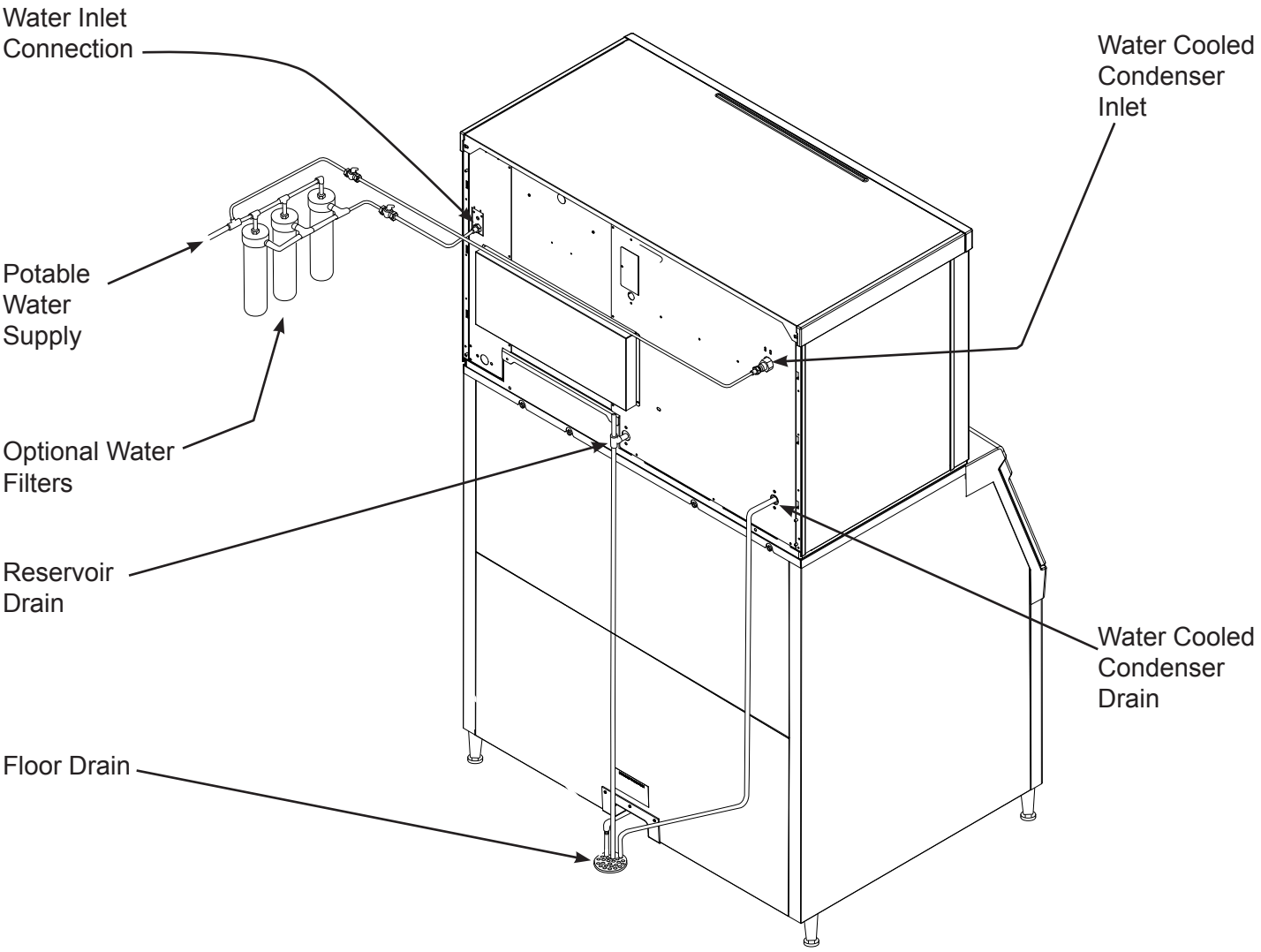

Water Supply and Drain Connections

Electrical

The machine is not supplied with a power cord, the machine should be hard-wired.

The dataplate on the back of the cabinet details the power requirements, including voltage, phase, minimum circuit ampacity and maximum fuse size.

HACR type circuit breakers may be used in place of fuses. Extension cords are not permitted. Use of a licensed electrician is recommended.

Electrical connections are made inside the junction box in the back panel of the ice machine.

1. Remove the junction box cover and route the power cord through the access hole and properly attach the power supply wires to the leads in the junction box.
2. Install a field supplied strain relief per code.
3. Attach a ground wire to the ground connection in the junction box.
4. Check voltage when complete.
5. Return the junction box cover to its original position and secure with the original screws.

Follow all applicable local, state and national codes.

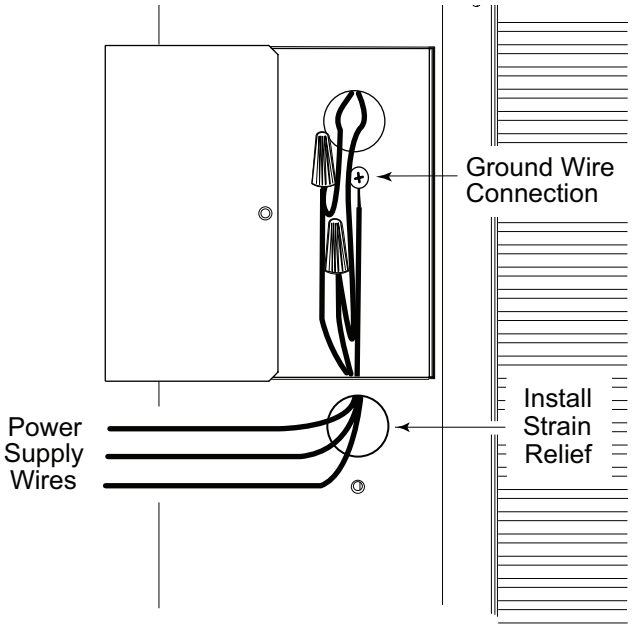

Final Check List

After connections,

1. Wash out the bin. If desired, the interior of the bin could be sanitized.
2. Locate the ice scoop (if supplied) and have it available for use when needed.

Before start up,

1. Is the unit located indoors in a controlled environment?
2. Is the unit located where it can receive adequate cooling air?
3. Has the correct electrical power been supplied to the machine?
4. Have all the water supply connections been made?
5. Have all the drain connections been made?
6. Has the unit been leveled?
7. Have all unpacking materials been removed?
8. Is the water pressure adequate?
9. Have the drain connections been checked for leaks?
10. Has the bin interior been wiped clean or sanitized?
11. Have any water filter cartridges been replaced?
12. Have all required kits and adapters been properly installed?

Initial Start Up

1. Remove front panel. Check machine for any packing or wires rubbing moving parts.

2. Switch on the electrical power to the machine. Observe that some of the control's indicator lights glow and its display shows 0.

3. Open the water supply valve.

4. Push and release the **lower light and switch panel's ON button**. The indicator light will begin to blink F.

The purge valve will open and the water pump will start. The inlet water valve will open to add water to the reservoir. After a few seconds the purge valve will close and the water pump will stop. Water will flow into the machine until the reservoir is full. The hot gas valves and harvest assist devices will activate then the compressor and water pump will start. If its an air cooled model the fan motors will begin to turn. The display will show a continuous F. Five seconds later the hot gas valves will close and the harvest assist device will return to its standby position. Warm air will be discharged from air cooled models.

5. Observe the Ready for Harvest indicator light. It may blink early in the cycle, that is normal. The control will ignore that signal for the first 6 minutes of freeze.

6. During the Freeze cycle open and close the curtains. The SW1 and SW2 lights on the control board will blink ON when each curtain is opened and OFF when closed.

Note: Moving a curtain during the Freeze cycle has no affect on the control, but will cause water to flow into the cube chute.

7. When the ice has frozen enough, the Ready for Harvest indicator light will be on steady. After it's been on steady for a few seconds Harvest will begin.

8. The display shows an H.

The hot gas valves open, the air cooled fan motors shut off and the harvest assist mechanisms are activated. The purge valve opens to drain some water, when it does the inlet water valve opens to refill the reservoir. After a few seconds the purge valve closes but the inlet water valve continues to fill the reservoir. Harvest continues until the ice is released as a unit and forces the curtain to open. When both curtains re-close the controller returns the unit to a freeze cycle.

9. Check the ice harvested for proper bridge thickness. The ice bridge is factory set at 3/16 inch. If needed, adjust bridge thickness. Do NOT make it too thin.

10. Determine the water purge setting from the table on page 15. If desired, change the setting to accommodate the local water conditions.

11. Return the front panel to its normal position and secure it to the machine.

12. Instruct the user in the operation of the machine and its maintenance requirements.

13. Fill out and mail warranty registration form or register on line at www.scotsman-ice.com.

Typical Ice Making Cycle Times (minutes).

Listed times are for clean machines in proper installations. Cycle length at start up will be longer until the system stabilizes.

Model	70°F. air / 50°F. water	90°F. air / 70°F. water
C1448A	12-14	14-16
C1448W	13-15	14-16
C1848A	9-11	12-14
C1848W	9-11	10-12

Bridge Thickness - For Service Tech Only

1. Push and hold Off till the machine stops.
2. Remove evaporator cover.
3. Remove curtain.
4. Use a box wrench and rotate the bridge thickness adjustment screw in 1/8 turn increments CW to increase bridge thickness.
5. Rotate CCW to decrease bridge thickness.

Caution: Do not make the bridge too thin or the machine will not harvest properly. Bridge thickness adjustments are not covered by warranty.

6. Return curtain to its normal position.
7. Push and release the On button. Check next harvest of ice. Repeat steps 1-6 if needed.

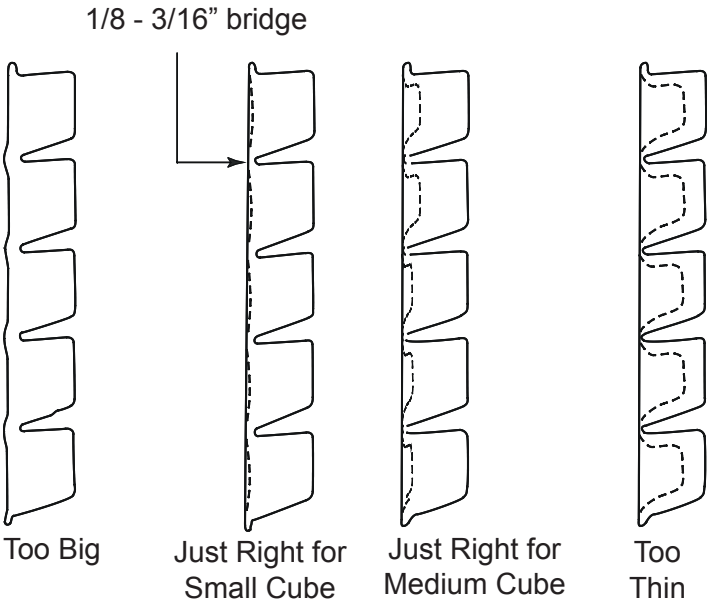

Ice Bridge Thickness Check

Note: Water cooled models, the refrigeration system discharge pressure is factory set at 245 PSIG, which should yield a freeze cycle discharge water temperature of about 105-110 degrees F. Adjust if necessary.

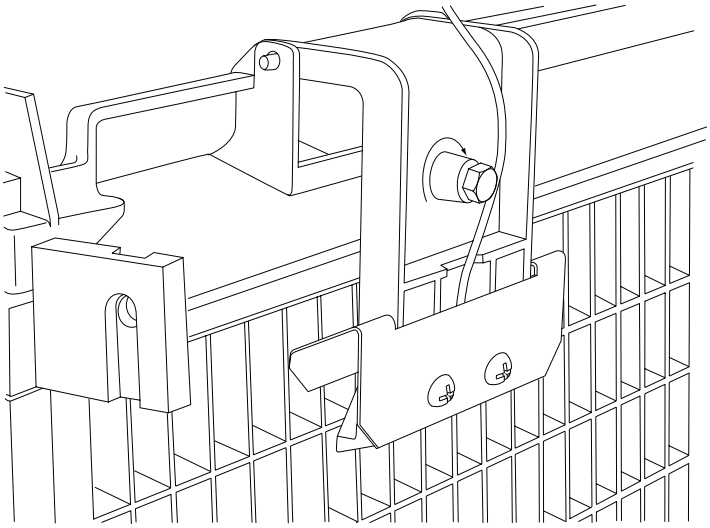

Ice Thickness Sensor

Water flush setting

The water flush is factory set to the automatic position, suitable for most water conditions. The setting can be changed to one of 5 manual settings or left on automatic.

Flush setting	1 - Minimum	2 - Moderate	3 - Standard	4 - Heavy	5 - Maximum	A - Automatic
Water Type	RO water or equivalent		Factory Setting for typical water		High TDS water	Any with conductivity not less than 10 microSiemens/cm

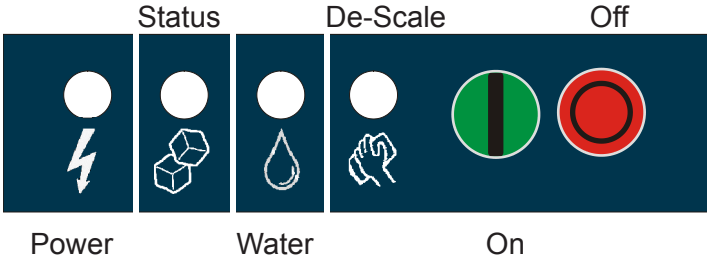

To set:

1. Switch the machine OFF by holding the Off button in until a number or the letter A shows on the display.
2. Press and release the On button repeatedly until the number on the display corresponds to the desired setting.
3. Press and release the Off switch again to return to the normal control state.

Once started, the ice machine will automatically make ice until the bin is full of ice. When ice level drops, the ice machine will resume making ice.

Caution: Do not place anything on top of the ice machine, including the ice scoop. Debris and moisture from objects on top of the machine can work their way into the cabinet and cause serious damage. Damage caused by foreign material is not covered by warranty.

There are four indicator lights at the front of the machine that provide information on the condition of the machine.

Indicator Lights:

- Power
- Status
- Water
- Clean

If the Water light is on, the machine has sensed a lack of water. Check the water supply to the machine. The water may have been shut off or the water filter cartridges need to be changed.

If the Clean light is on, the machine has determined that it may need to be cleaned. Contact an authorized Scotsman service agent and have the machine cleaned, de-scaled and sanitized.

Note: A Component Indicator Light switches ON to indicate that the component is operating.

Note: There are two Curtain Switch lights, SW1 and SW2. A curtain switch light is ON when a curtain is either open or not present.

Light indicators & their meanings

	Power	Status	Water	De-Scale & Sanitize
Steady Green	Normal	Normal – bin full or making ice	-	-
Blinking Green	Self Test Failure	Switching on or off	-	-
Blinking Red	-	Diagnostic shutdown or, if making ice, temperature sensor failure	Lack of water	
Yellow	-	-	-	Time to de-scale and sanitize
Blinking Yellow	-	-	-	In Cleaning mode
Light off	No power	Switched off	Normal	Normal

Switches

The two switches – on and off - can be accessed from the front of the machine.

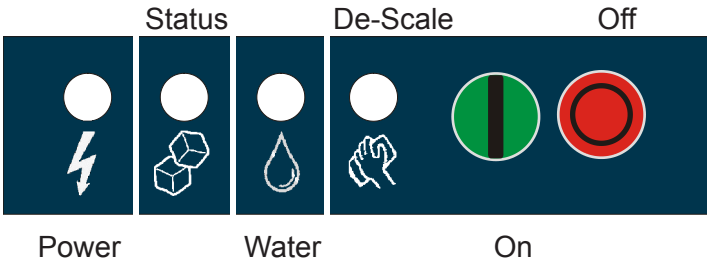

- To switch the machine OFF, push and release the Off button. The machine will shut off at the end of the next cycle.
- To switch the machine ON, push and release the On button. The machine will go through a start up process and then resume ice making.

Control Options

There are two optional, field installed controls that can be on this machine.

- Vari-Smart (KVS) Adjustable ice level control
- Smart-Board (KSBU) Advanced Feature control

Adjustable ice level control

When this option is present there is an adjustment post and an additional indicator light to the right of the four indicator lights mentioned above. The ultrasonic ice level control allows the use to control the point that the ice machine will stop making ice before the bin or dispenser is full. Reasons for this include:

- Seasonal changes in ice used
- Planning to sanitize the bin
- Faster turnover for fresher ice
- Certain dispenser applications where maximum ice level is not desired

Use of control

Vari-Smart Control Area

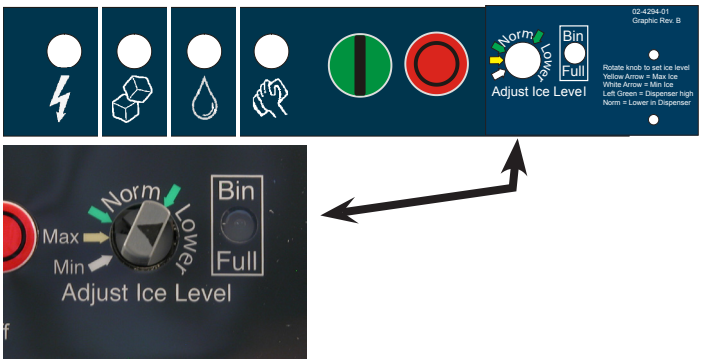

There are several positions the ice level can be set to, including Off (knob and label indicators lined up), where it fills the bin until the standard bin control shuts the machine off. See the kit's instructions for complete details.

Rotate the adjustment post to the desired ice level. The machine will fill up to that level and when it shuts off the indicator light next to the adjustment post will be On.

Note: Ice will build up in the bin at an angle, the distances listed above will be from the sensor to the top of the ice directly beneath it. The actual distance between the highest point of the ice may be closer or further away, depending upon the angle of the ice.

Cleaning, Sanitation and Maintenance

This ice system requires three types of maintenance:

- Remove the build up of mineral scale from the ice machine's water system and sensors.
- Sanitize the ice machine's water system and the ice storage bin or dispenser.
- Clean or replace the air filters and clean the air cooled condenser (air cooled models only).

It is the User's responsibility to keep the ice machine and ice storage bin in a sanitary condition. Without human intervention, sanitation will not be maintained. Ice machines also require occasional cleaning of their water systems with a specifically designed chemical. This chemical dissolves mineral build up that forms during the ice making process.

Sanitize the ice storage bin as frequently as local health codes require, and every time the ice machine is cleaned and sanitized.

The ice machine's water system should be cleaned and sanitized a minimum of twice per year.

1. Remove the front panel.
2. Remove the evaporator cover.
3. Remove all ice from the storage bin or dispenser.
4. Push and release the Clean button. The yellow Clean light will blink and the display will show C. The machine will harvest any ice, drain the reservoir and begin to refill it.

Note: Curtains must be in the closed position. Move curtains to release any ice trapped after ice is harvested.

5. Observe code display, when it blinks the characters "A d 1" immediately go to the next step.
6. Pour 24 ounces of Scotsman Clear 1 ice machine scale remover into the reservoir. The unit will circulate the scale remover, then drain and flush it. This will take 35 minutes, then the machine will stop and the display will show 0.

⚠ CAUTION	Ice machine cleaner contains acids. Acids can cause burns.
	If concentrated cleaner comes in contact with skin, flush with water. If swallowed, do NOT induce vomiting. Give large amounts of water or milk. Call Physician immediately. Keep out of the reach of children.

1. Note: If unit has not been de-scaled for an extended period of time and significant mineral scale remains, repeat steps 4-6.

7. Mix a cleaning solution of 1 oz of ice machine scale remover to 12 ounces of water.
8. Locate curtains, push in on edge of curtain by pivot pin to release it. Pull curtains out of machine.
9. Remove water distributors from ice machine. Remove cover, inspect distributor for restricted orifice holes, flush out any debris and open any restricted holes. Return cover to distributor, be sure it is fully attached.
10. Locate ice thickness sensor. Squeeze mounting legs together to release sensor.

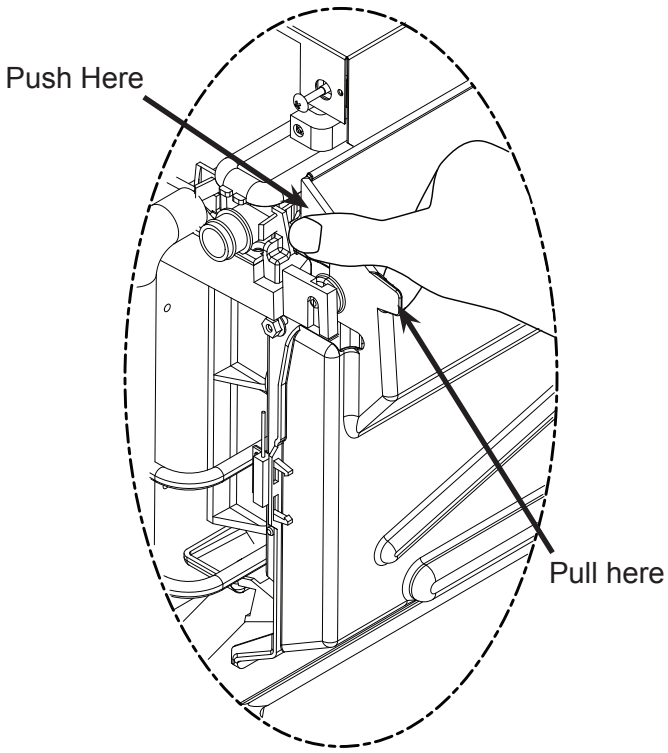

11. Wash the sensor and the adjustment screw with ice machine scale remover solution, rinse with clean water. Also wash the water distributor and curtain with the ice machine cleaner solution.

Squeeze tabs together, slide out until it stops, then lift to remove.

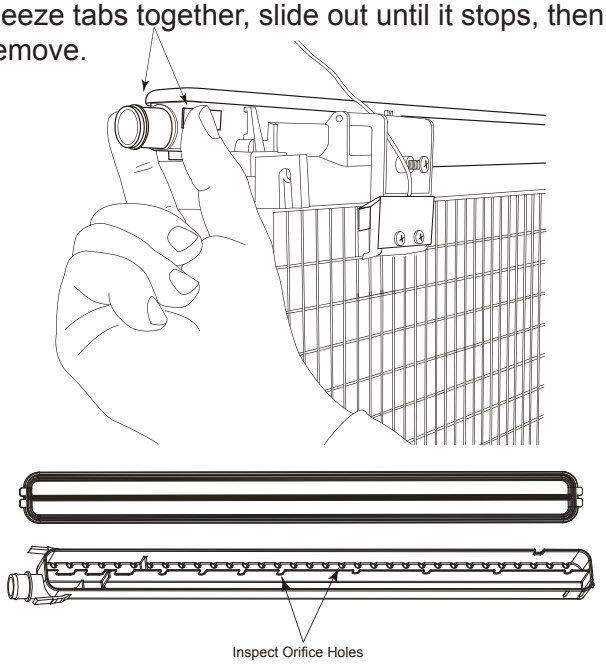

12. Locate water level sensor. Squeeze catches together and pull up to remove sensor.

13. Separate probes from housing and wash all surfaces with ice machine scale remover solution. Rinse and return probes to holder.

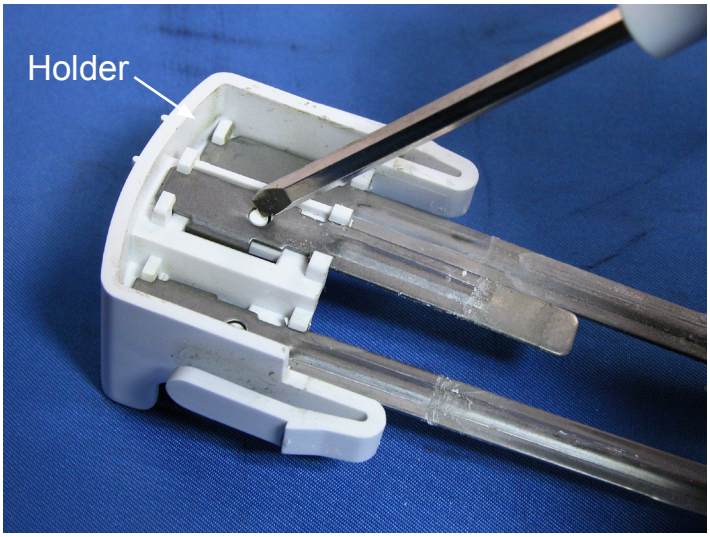

Release probes by pushing in on white buttons and pulling probe down out of holder. The white holder is an insulator and must be clean for proper operation.

14. Create a solution of sanitizer. Mix 8 ounces of NuCalgon IMS II and 5 gallons of 105-115 degree F. potable water to create a 200 ppm active quaternary solution.

15. Thoroughly wash all surfaces of the ice thickness sensor, water level sensor, curtain and water distributor with the sanitizer solution.

16. Wash all interior surfaces of the freezing compartment, including evaporator cover and right side panel liner with the sanitizer solution.

17. Return water level sensor, ice thickness sensor, water distributors and curtains to their normal positions. Be sure water level sensor and ice thickness sensor are completely dry.

18. Push and release the Clean button. The yellow Clean light will blink and the display will show C. The machine will go through a harvest cycle, drain the reservoir and begin to refill it.

19. Observe code display, when it blinks the characters "Rdi" immediately go to the next step.

20. Pour the sanitizing solution into the reservoir until it is full. The unit will circulate the sanitizer, then drain and flush it. This will take 35 minutes, then the machine will stop and the display will show 0.

21. Return all panels and covers removed to their original positions.

22. Push and release the On button to resume ice making.

Ice Storage Bin

Remove and discard all ice. Mix a solution of Scotsman Clear 1 ice machine scale remover and wash all interior surfaces of the ice storage bin to remove any mineral scale build up. Pour excess cleaner solution into the bin's drain.

Mix a solution of sanitizer and thoroughly wash all interior surfaces of the ice storage bin.

Air cooled condenser filter

1 Pull air filters from their louvered mounts.

2 Wash the dust and grease off the filter.

3 Return them to their original positions.

Do not operate the machine without the filter in place except during cleaning.

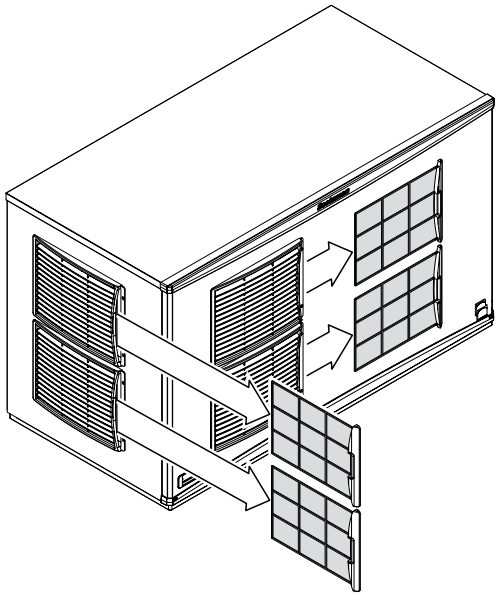

Maintenance

Air cooled condenser

If the machine has been operated without a filter the air cooled condenser fins will need to be cleaned.

Push and release the Off button. Wait until the machine stops.

If there is imbedded grease, use a commercial coil cleaner to wash out the grease. Dust can be blown out with compressed air from the back with a vacuum cleaner operating in the fan area. Be careful not to damage the condenser's fins. Use a fin comb to straighten any bent fins.

Exterior Panels

The front and side panels are durable stainless steel. Fingerprints, dust and grease will require cleaning with a good quality stainless steel cleaner.

Water filters

If the machine has been connected to water filters, check the cartridges for the date they were replaced or for the pressure on the gauge. Change cartridges if they've been installed more than x months or if the pressure drops too much when the ice machine fills with water.

What to do before calling for service

Reasons the machine might shut itself off:

- Lack of water.
- Freeze cycle takes too long.
- Harvest cycle takes too long.
- High discharge temperature.
- Controller self test failure.

Check the following:

1. Has the water supply to the ice machine or building been shut off? If yes, the ice machine will automatically restart within 25 minutes after water begins to flow to it.
2. Has power been shut off to the ice machine? If yes, the ice machine will automatically restart when power is restored.
3. Has someone shut the water off to a water cooled unit? If yes, the ice machine may need to be manually reset.
4. Is the curtain open because some ice is stuck under it? If so, remove the ice and the machine should start in a few minutes.

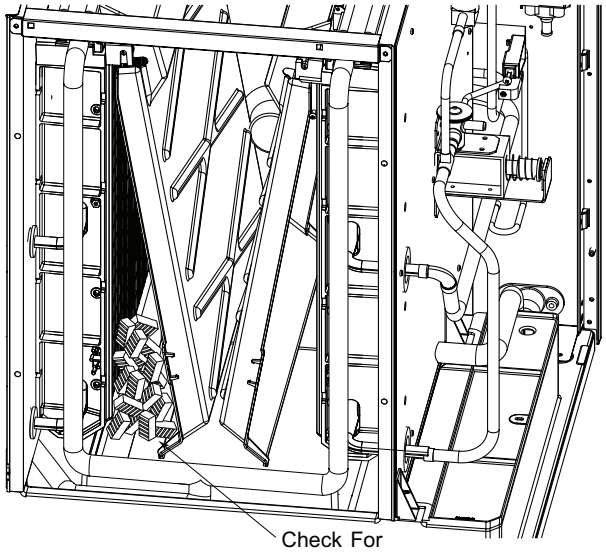

Note: Curtain can be removed & replaced anytime the machine is in a standby mode or when it is in a freeze cycle. Removal of the curtain during harvest terminates harvest at that point and, if left off, will result in the machine shutting off.

To Manually Reset the machine.

- Open the switch door
- Push and release the Off button.
- Push and release the On button.

To Shut the Machine Off:

Push and hold the Off button for 3 seconds or until the machine stops.

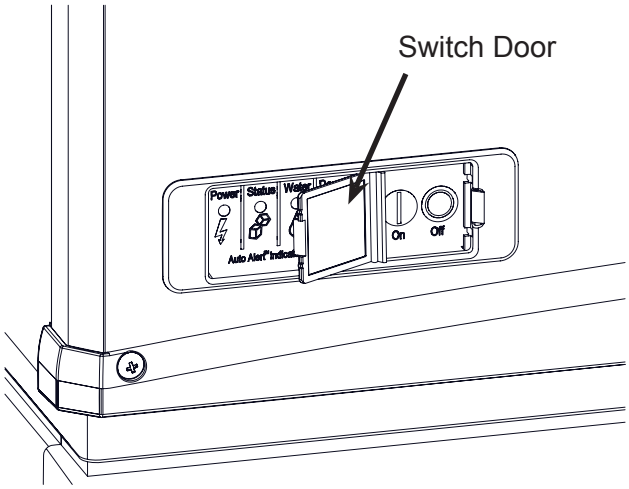

SCOTSMAN ICE SYSTEMS

775 Corporate Woods Parkway

Vernon Hills, IL 60061

800-726-8762

www.scotsman-ice.com

17-3495-02

Commercial Kitchen Equipment Parts

Find more Scotsman equipment resources at

parthubz.com/equipment/scotsman

Need parts or service?

Call 833-700-8006

support@parthubz.com

parthubz.com